Drainage Conditions 962 Hillcrest Dr - PLN2025-00155 9/26/25

Conditions:

- DRA 1. Project will comply with County drainage policy to prevent stormwater from flowing across property lines. For projects that trigger size and/or slope thresholds, prior to the issuance of the Building permit or Planning permit for new residential development, the applicant shall have prepared, by a registered civil engineer, a drainage analysis of the proposed project and submit it to the Planning and Building Department for review and approval. The drainage analysis shall consist of a written narrative and a plan. The flow of the stormwater onto, over, and off of the property shall be detailed on the plan and shall include adjacent lands as appropriate to clearly depict the pattern of flow. The analysis shall detail the measures necessary to certify adequate drainage. Post-development flows and velocities shall not exceed those that existed in the pre-developed state. Recommended measures shall be designed and included in the improvement plans and submitted to the Department of Public Works and Planning and Building Department for review and approval.
- DRA 2. A final C.3 and C.6 Development Review Checklist, a final drainage plan, and a drainage analysis/drainage report will be provided at the time of building permit submittal.
- DRA 3. Project shall demonstrate how it meets County's Peak Flow and Volume Requirement of detaining/retaining a 10-year, 1 hour storm event.
- DRA 4. Project shall ensure all drainage outlet devices are a minimum of 5 ft from property lines, a minimum of 10 ft from foundations, and a minimum of 2 ft from utilities.
- DRA 5. At the time of the building permit submittal, project shall provide a detail of the deck to demonstrate whether deck is considered a pervious or impervious surface.
- DRA 6. Per the State Water Board Municipal Regional Permit, gravel surfaces are considered impervious unless constructed similarly to pervious pavement system. At the time of the building permit submittal, if the subgrade soil is compacted more than 90%, the D.G./Gravel Walkway is considered an impervious surface.
- DRA 7. An erosion control plan shall be provided at the time of the building permit submittal.
- DRA 8. Advisory Comment: Based on the information received, this project is classified as a "Standard" drainage project. It is possible that new or additional information provided upon the next submittal could advance the project classification. To avoid delays or additional plan review cycles, please reference the San Mateo County Drainage Manual (SMCDM) online at: https://planning.smcgov.org/drainage-manual.

PLANNING DRAINAGE CONDITIONS OF APPROVAL 8

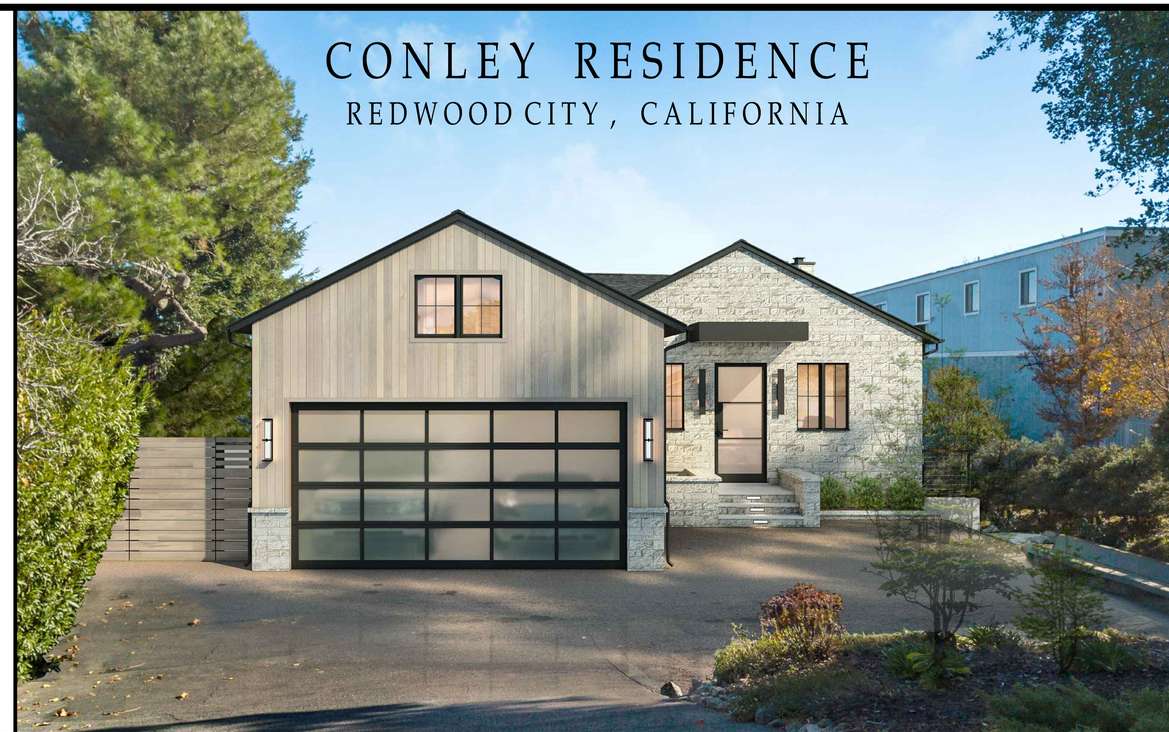

PROPOSED FRONT ELEVATION 3D RENDERING 4

NOTICE: THIS SET HAS BEEN PRODUCED FOR THE PURPOSE OF OBTAINING A BUILDING PERMIT. THESE DRAWINGS ARE NOT INTENDED TO BE ACCURATE "AS-BUILTS," NOR INCLUSIVE OF ALL DETAILS, DRAWINGS, MATERIAL SPECIFICATIONS, ETC. NEEDED TO ADDRESS ALL POSSIBLE CONSTRUCTION ISSUES. THE ARCHITECT HAS PREPARED THESE DOCUMENTS ONLY FOR THE IMPROVEMENTS AND CONSTRUCTION NOTED, INDICATED OR SHOWN AS "NEW" WORK AND ASSUMES NO RESPONSIBILITY FOR ALL OTHER CONSTRUCTION, MATERIALS OR EQUIPMENT NOTED, INDICATED OR SHOWN AS "EXISTING" OR AS PROVIDED "BY OTHERS".

THE ARCHITECT HAS NOT BEEN RETAINED TO SURVEY FOR OR OTHERWISE DISCOVER THE PRESENCE OF HAZARDOUS MATERIALS INCLUDING BUT NOT LIMITED TO ASBESTOS, ASBESTOS PRODUCTS, PCB'S, OR OTHER TOXIC SUBSTANCES.

THE ARCHITECT IS NOT RESPONSIBLE FOR THE HANDLING, REMOVAL OR DISPOSAL OF OR EXPOSURE OR PERSONS TO HAZARDOUS MATERIALS IN ANY FORM AT THE PROJECT SITE. OWNER HEREBY WARRANTS THAT IF IT KNOWS OR HAS ANY REASON TO KNOW OR HAS ANY REASON TO ASSUME OR SUSPECT THAT HAZARDOUS MATERIALS EXIST AT THE PROJECT SITE, THAT IT WILL INFORM THE ARCHITECT AND THAT OWNER WILL CAUSE SUCH ITEMS TO BE REMOVED OR TREATED BY A PROFESSIONAL AND LICENSED ASBESTOS ABATEMENT CONTRACTOR IN A MANNER PRESCRIBED BY ALL APPLICABLE CODES AND REGULATIONS.

DEFERRED SUBMITTALS:

- NFPA 13D FIRE SPRINKLER SYSTEM
- POOL DESIGN

GENERAL NOTES 2

VICINITY MAP 7

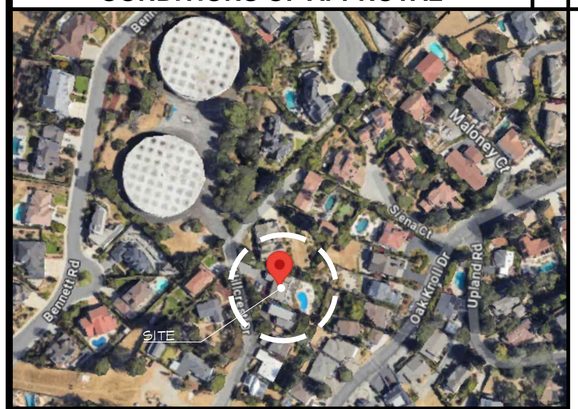

PARCEL MAP 6

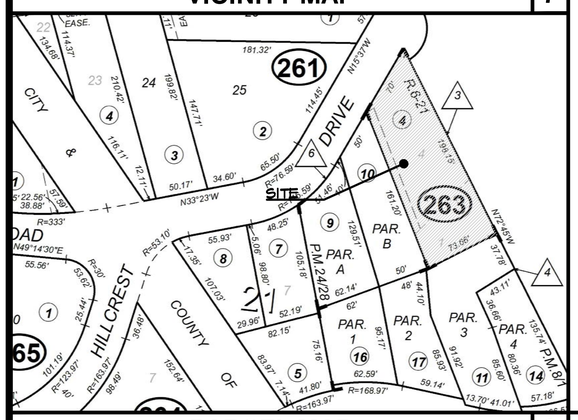

CONSULTANTS 5

ARCHITECT
YOUNG & BORLIK ARCHITECTS, INC.
4962 EL CAMINO REAL, SUITE 218
LOS ALTOS, CA 94022
TEL: (650) 688-1950
ATTN: ANDREW YOUNG
ayoung@ybarchitects.com

SURVEYOR AND CIVIL ENGINEER
LEA & BRAZE ENGINEERING INC.
2495 INDUSTRIAL PARKWAY WEST
HAYWARD, CA 94545
TEL: (510) 887-4086
ATTN: JIM TOBY AND CHRIS PHAN

ARBORIST
URBAN TREE MANAGEMENT
P.O. BOX 971
LOS GATOS, CA 95031
TEL: (707) 415-9709
ATTN: KEVIN J. CARLSON
kevin@urbantreemanagement.com

SOILS ENGINEER
ROMIG ENGINEERS, INC.
1390 EL CAMINO REAL, 2ND FLOOR
SAM CARLOS, CA 94070
TEL: (650) 591-5224
ATTN: BENJAMIN ROMIG

STRUCTURAL ENGINEER&T24
ATA ENGINEERING
1202 MAIN STREET
REDWOOD CITY, CA 94063
TEL: (650) 363-2338
ATTN: ALI ADIB
ata@ataeng.net

LANDSCAPE ARCHITECT
MARA YOUNG LANDSCAPES
836 18TH AVE
MENLO PARK CA, 94025
TEL: (650) 327-2644
MARAYOUNG@GMAIL.COM

THE DOCUMENTS PREPARED BY THESE CONSULTANTS ARE AN INTEGRAL PART OF THE ARCHITECTURAL CONSTRUCTION DOCUMENTS AND SHALL BE INCORPORATED INTO THIS SET BY REFERENCE, I.E. SOILS REPORT, TITLE-24, STRUCTURAL CALCULATIONS, ETC. THE MOST STRINGENT REQUIREMENTS SHALL BE FOLLOWED. THE CONTRACTOR SHALL OBTAIN CURRENT COPIES OF ALL DOCUMENTS, READ, UNDERSTAND AND CONFIRM ANY CONFLICTS OR DISCREPANCIES OR QUESTIONS WITH APPROPRIATE CONSULTANTS.

PROJECT DESIGN DATA:

2022 CALIFORNIA BUILDING CODE - VOL. 1&2
2022 CALIFORNIA RESIDENTIAL CODE
2022 CALIFORNIA MECHANICAL CODE
2022 CALIFORNIA PLUMBING CODE
2022 CALIFORNIA ELECTRIC CODE
2022 CALIFORNIA FIRE CODE
2022 CALIFORNIA GREEN BUILDING CODE (CALGREEN)
2022 CALIFORNIA ENERGY CODE
ALONG WITH ALL OTHER LOCAL AND STATE LAWS AND REGULATIONS.

SHEET INDEX 3

ARCHITECTURAL
A0.1 VICINITY MAP, CONSULTANTS, SHEET INDEX, PROJECT SUMMARY
A0.1.2 PROPOSED 3D RENDERINGS
A0.1.3 COLOR & MATERIAL BOARD
A0.2 GENERAL NOTES
A0.2.2 CALGREEN RESIDENTIAL MANDATORY MEASURES - 1
A0.2.3 CALGREEN RESIDENTIAL MANDATORY MEASURES - 2
A0.3 ARBORIST REPORT
A0.4 EXISTING SITE PLAN
A0.5 PROPOSED SITE PLAN
A0.6.1 PROPOSED SITE SECTION
A0.6.2 PROPOSED ROOF HEIGHTS ABOVE GRADE ANALYSIS
A0.7 AREA CALCULATIONS
A1.1 EXISTING LOWER LEVEL PLAN W/ DEMO NOTES
A1.2 EXISTING UPPER LEVEL PLAN W/ DEMO NOTES
A1.3 EXISTING ROOF PLAN W/ DEMO NOTES
A2.1.1 PROPOSED LOWER LEVEL FLOOR PLAN
A2.1.2 PROPOSED LOWER LEVEL DIMENSION PLAN
A2.2.1 PROPOSED UPPER LEVER FLOOR PLAN
A2.2.2 PROPOSED UPPER LEVEL DIMENSION PLAN
A2.3 PROPOSED ROOF PLAN
A3.1 EXISTING AND PROPOSED FRONT ELEVATION
A3.2 EXISTING AND PROPOSED RIGHT ELEVATION
A3.3 EXISTING AND PROPOSED REAR ELEVATION
A3.4 EXISTING AND PROPOSED LEFT ELEVATION
A4.1 EXISTING AND PROPOSED SECTIONS
A4.2 EXISTING AND PROPOSED SECTIONS
A6.1 BASEMENT WATERPROOFING SPECIFICATION
A6.2 PLUMBING AND LIGHTWELL SPECIFICATIONS
A6.3 ELECTRIC SERVICE AND SOLAR INTEGRATION SPEC.
A6.4 SOLAR ATTACHMENT AND FAN SPECIFICATIONS
A8.1 ARCHITECTURAL DETAILS
A9.1 DOOR AND WINDOW SCHEDULE
A9.2 WALL TYPE AND APPLIANCE SCHEDULE
MEP1.0 GENERAL MEP NOTES
MP2.1 LOWER LEVEL MECHANICAL AND PLUMBING PLAN
MP2.2 UPPER LEVEL MECHANICAL AND PLUMBING PLAN
E2.1 LOWER LEVEL ELECTRICAL PLAN
E2.2 UPPER LEVEL ELECTRICAL PLAN
LS2.1 LOWER LEVEL LIGHTING AND SWITCHING PLAN
LS2.2 UPPER LEVEL LIGHTING AND SWITCHING PLAN

TOPOGRAPHIC SURVEY:
SU-1 TOPOGRAPHIC SURVEY PLAN

CIVIL GRADING AND DRAINAGE:
C-1.0 TITLE SHEET
C-1.1 OVERALL SITE PLAN
C-2.0 GRADING & DRAINAGE PLAN
C-3.0 UTILITY PLAN
C-4.0 DETAILS
C-4.1 DETAILS
C-5.0 GRADING SPECIFICATIONS
ER-1 EROSION CONTROL PLAN
ER-2 EROSION CONTROL DETAILS
BMP BEST MANAGEMENT PRACTICES

LANDSCAPE:
L-1 LANDSCAPE PLAN
L-2 IRRIGATION PLAN
L-3 HYDROZONE DIAGRAM

STRUCTURAL
S-1 FOUNDATION PLAN
S-2 LOWER ROOF & SECOND FLOOR FRAMING PLAN
S-3 UPPER ROOF FRAMING PLAN
SD-1 STRUCTURAL DETAILS AND NOTES
SD-2 STRUCTURAL DETAILS
SD-3 STRUCTURAL DETAILS
SD-4 STRUCTURAL DETAILS
SD-5 STRUCTURAL DETAILS
SD-6 STRUCTURAL DETAILS
SD-7 STRUCTURAL DETAILS
SD-8 STRUCTURAL DETAILS
SD-9 STRUCTURAL DETAILS
HFX1 ANCHORAGE DETAILS - HFX PANELS
HFX2 FRAMING DETAILS - HFX PANELS
HFX3 FLOOR SYSTEM DETAILS - HFX PANELS

PROJECT SUMMARY 1

SCOPE:

NEW 2-STORY RESIDENCE WITH NEW POOL AND HARDSCAPE.

APN#:	058 - 263 - 040
OWNER:	ERIN AND EMILY CONLEY
PROJECT ADDRESS:	962 HILLCREST DRIVE REDWOOD CITY, CA 94062
BUILDING OCCUPANCY:	R-3/ U
TYPE OF CONSTRUCTION:	V-B
FIRE SPRINKLERS:	YES
ZONING:	RH/DR
LOT SIZE:	11,717 sf (.27 acre)
HISTORIC STATUS:	NO
FLOOD ZONE:	X
STORIES:	2
ALLOWABLE LOT COVERAGE:	2,929.25 sf (25% OF LOT)
ALLOWABLE F.A.R:	3,515.1 sf (GREATER OF 30% OF LOT OR 2,400SF)
FRONT SETBACK:	20'
SIDE SETBACK:	20' (7.5' MIN ON ONE SIDE)
REAR SETBACK:	20'
HEIGHT LIMIT:	28'

EXISTING AREA CALCULATION:

EXISTING CONDITIONED LOWER FLOOR LEVEL:	825.6 sf
EXISTING UNCONDITIONED ATTACHED GARAGE:	396.4 sf
EXISTING CONDITIONED UPPER FLOOR LEVEL:	1,088.0 sf
TOTAL EXISTING MAIN HOUSE FLOOR AREA:	2,310.0 sf
EXISTING ACCESSORY BUILDING FLOOR AREA:	285.0 sf
TOTAL EXISTING LOT COVERAGE:	1,507.0 sf

PROPOSED AREA CALCULATION:

PROPOSED BASEMENT LEVEL:	376.2 sf (NOT COUNTED TO FAR)
PROPOSED CONDITIONED LOWER FLOOR LEVEL:	1,468.7 sf
PROPOSED CONDITIONED UPPER FLOOR LEVEL:	1,670.0 sf
PROPOSED UNCONDITIONED ATTACHED GARAGE:	376.2 sf
TOTAL PROPOSED FLOOR AREA:	3,514.9 sf < 3,515.1 sf
TOTAL PROPOSED LOT COVERAGE:	2,587.2 sf < 2,929.25 sf

SEE SHEET A0.7 FOR DETAILED AREA CALCULATIONS

ISSUE LOG
DESIGN REVIEW SUBMITTAL MAY 20, 2025
DR PLAN CHECK RESUBMITTAL JUL. 15, 2025
DR PLAN CHECK RESUBMITTAL OCT. 03, 2025

LICENSED ARCHITECT ANDREW BERLE YOUNG C-21679 REN. 4-30-26 STATE OF CALIFORNIA

Young & Borlik Architects
4962 EL CAMINO REAL, STE 218
LOS ALTOS, CALIFORNIA 94022
650-688-1950 | YBarchitects.com

NEW RESIDENCE FOR:
ERIN AND EMILY CONLEY
962 HILLCREST DRIVE
REDWOOD CITY, CA 94062

A.P.N. 058-263-040
CHECKED AEY | DRAWN OH, MC
DATE SEP. 23. 2024
JOB # CONLEY

A0.1

Copyright 2025 YOUNG AND BORLIK ARCHITECTS INC. All designs, drawings, and written materials appearing herein, are protected and constitute original and unpublished work of the Architect and may not be revised, re-used, copied, or disclosed without the written consent of the Architect. Equipment manufactured by others is excluded. Drawings and specifications are instruments of architectural service, and shall remain the the property of the Architect. Use is restricted to the site for which they are prepared.

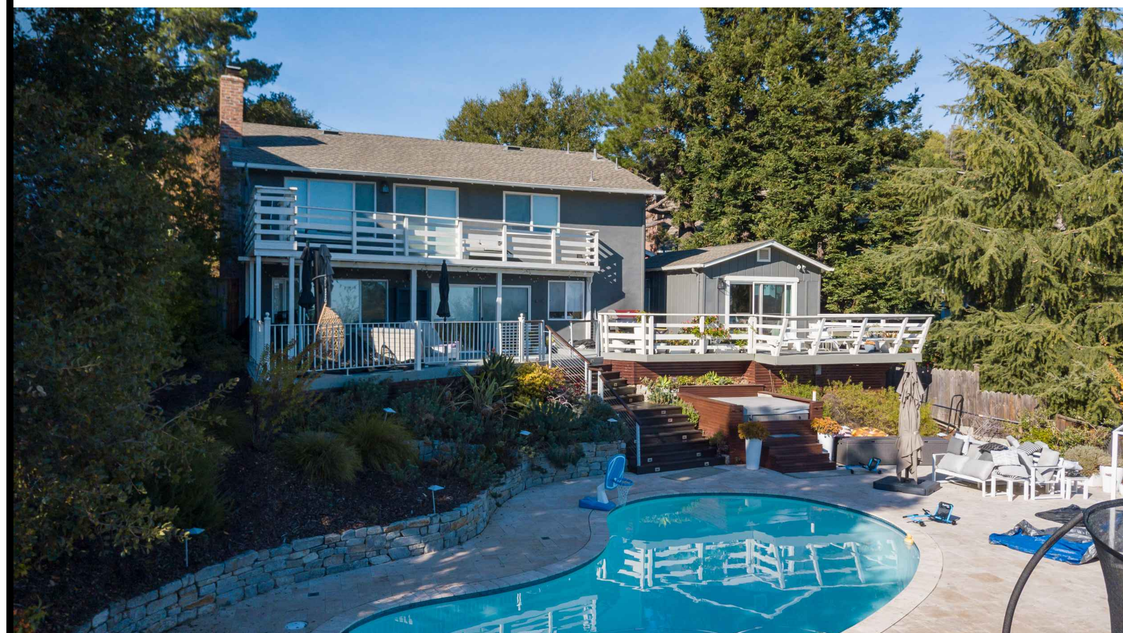

EXISTING REAR ELEVATION | 4

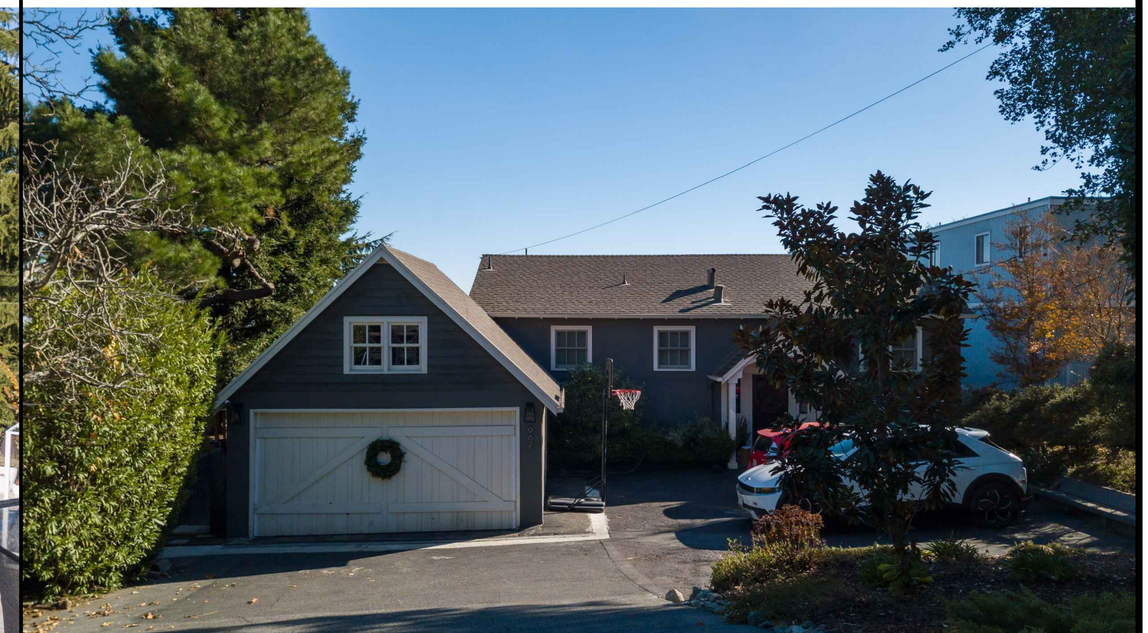

EXISTING FRONT ELEVATION | 2

PROPOSED REAR ELEVATION 3D RENDERING | 3

PROPOSED FRONT ELEVATION 3D RENDERING | 1

Copyright 2025 YOUNG AND BORLIK ARCHITECTS INC. All designs, drawings, and written materials appearing herein, are protected and constitute original and unpublished work of the Architect and may not be revised, re-used, copied, or disclosed without the written consent of the Architect. Equipment manufactured by others is excluded. Drawings and specifications are instruments of architectural service, and shall remain the the property of the Architect. Use is restricted to the site for which they are prepared.

ISSUE LOG

DESIGN REVIEW SUBMITTAL	MAY 20, 2025
DR PLAN CHECK RESUBMITTAL	JUL. 15, 2025
DR PLAN CHECK RESUBMITTAL	**OCT. 03, 2025**

LICENSED ARCHITECT ERIK YOUNG C-21679 STATE OF CALIFORNIA

Young & Borlik Architects
4962 EL CAMINO REAL, STE 218
LOS ALTOS, CALIFORNIA 94022
650-688-1950 | YBarchitects.com

NEW RESIDENCE FOR:
ERIN AND EMILY CONLEY
962 HILLCREST DRIVE
REDWOOD CITY, CA 94062

A.P.N. 058-263-040

CHECKED AEY	DRAWN OH, MC
DATE SEP. 23. 2024	
JOB # CONLEY	

A0.1.2

WHITE WASHED CEDAR (OR EQUAL) OVER 5/8" DENSHIELD FIRE RATED BD.

PROPOSED (3) COAT CEMENT PLASTER STUCCO FINISH PAINTED ALABASTER BY SHERWIN-WILLIAMS OR. EQ.

STEEL CABLE RAILING

FIRE RATED FIBERON DECKING

PREFABRICATED PAINTED METAL SPIRAL STAIRCASE

FRONT ELEVATION

REAR ELEVATION

PAINTED HALF ROUND GUTTER

HORIZONTAL CANTILEVERED ROOF COVER AT ENTRY

ALUMINUM FRAME, DOUBLE GLAZED WINDOWS AND DOORS

SOLAR PANEL

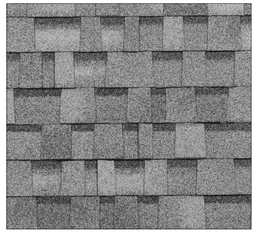

COMPOSITION ASPHALT SHINGLES

STONE VENEER

PROPOSED COLOR & MATERIAL SELECTIONS BOARD

1/8" = 1'-0" | 1

ISSUE LOG

DESIGN REVIEW SUBMITTAL	MAY 20, 2025
DR PLAN CHECK RESUBMITTAL	JUL. 15, 2025
DR PLAN CHECK RESUBMITTAL	OCT. 03, 2025

LICENSED ARCHITECT ANDREW BERLE YOUNG C-21679 REN. 4-30-26 STATE OF CALIFORNIA

Young & Borlik Architects
4962 EL CAMINO REAL, STE 218
LOS ALTOS, CALIFORNIA 94022
650-688-1950 | YBarchitects.com

Y&B

NEW RESIDENCE FOR:
ERIN AND EMILY CONLEY
962 HILLCREST DRIVE
REDWOOD CITY, CA 94062

A.P.N. 058-263-040

CHECKED	DRAWN
AEY	OH, MC

DATE: SEP. 23. 2024

JOB #: CONLEY

A0.1.3

Copyright 2025 YOUNG AND BORLIK ARCHITECTS INC. All designs, drawings, and written materials appearing herein, are protected and constitute original and unpublished work of the Architect and may not be revised, re-used, copied, or disclosed without the written consent of the Architect. Equipment manufactured by others is excluded. Drawings and specifications are instruments of architectural service, and shall remain the the property of the Architect. Use is restricted to the site for which they are prepared.

00. ARCHITECT/OWNER/CONTRACTOR AGREEMENT:
00.01 Contractor is responsible for thorough review of these documents including all plans, notes, details, elevations and information provided by owner prior to the commencement of any work.

00.02 The contractor is responsible for thorough review of compliance with the soils investigation report, the structural calculations report, Title-24 energy report, and any other consultant reports listed. All reports and recommendations are to be considered part of these construction documents.

00.03 The contractor shall notify the architect immediately of any discrepancies or conflicts found in these drawings.

00.04 The contractor shall give the architect adequate notice (min. 3 business days) for any necessary site visits or drawing revisions.

00.05 Should the contractor or owner disagree with any of the requirements of this set he/she shall notify the architect in writing prior to signing of the contract for construction and the architect shall be contracted to provide additional or alternative information needed or requested.

00.06 By using these documents for the construction, the Contractor and Owner warrant that they have read, do understand, and agree to these conditions.

1.0 GENERAL NOTES:
1.01 All work depicted on these drawings is required to comply with the California Building Standards Commission (CBSC) Title 24 Code of Regulations, 2022 California Residential Code. Construction is to comply with all volumes, sections and subsections of that code. It is the Contractor's responsibility to be familiar with the standard requirements for construction, and to maintain a copy of the 2022 California Residential Code at all times. The code(s) is/are to be considered a part of this set.

1.02 The contractor is to provide all work and materials in accordance with or as required by the 2022 California Building Code (CBC) Volume 1 & 2, 2022 California Residential Code (CRC), 2022 California Green Building Standards Code (CGBSC), 2022 California Mechanical Code (CMC), 2022 California Plumbing Code (CPC), 2022 California Electrical Code (CEC), 2022 California Fire Code (CFC), 2022 California Energy Code, 2022 California Reference Standards Code, and all other applicable state, federal and local codes.

1.03 These drawings and specifications are the property and copyright of the Architect and shall not be used on any other work or project except by written agreement with the Architect.

1.04 CONTRACTOR IS RESPONSIBLE FOR THOROUGH REVIEW OF, AND FAMILIARITY WITH, THESE DOCUMENTS, INCLUDING PLANS, ELEVATIONS, NOTES, DETAILS, CONSULTANT REPORTS,AND SUPPORTING DOCUMENTS PRIOR TO THE COMMENCEMENT OF ANY WORK. Any discrepancy in this set of construction documents is to be brought to the immediate attention of the Architect.

1.05 If specifications vary within this set, the most stringent is said to apply unless clarified in writing by the Architect.

1.06 If any details are noted to be missing or incomplete, written questions are to be directed to the Architect for clarification prior to the signing of any contract for construction.

1.07 The General Contractor is required to notify Architect in writing of any substitution, revision or proposed alternate at least two weeks prior to the expected date of order or installation of said alternate in order to allow adequate time of coordination and approvals by Architect, any professional consultants as well as the local code enforcement agency. A two week response is not guaranteed, so the greater the notice period, the better.

1.08 The General Contractor shall be responsible for scheduling and being present for all required inspections.

1.09 Written dimensions shall take precedence over scaled dimensions and shall be verified on the job site. Where appropriate, alignments to existing walls and finishes should govern. Any discrepancy shall be immediately brought to the attention of the Architect prior to the commencement of any work. The General Contractor shall verify all dimensions and site/grade conditions prior to commencing any work. The general contractor shall keep a set of these plans and specifications on the job site as reference at all times. The general contractor and framing contractor are responsible for working to coordinate shear wall lengths and hold-down locations with plumbing and mechanical infrastructure. Furring and soffits should be framed as required with verification of owner or Architect.

1.10 The construction contractor and his subcontractors agree that in accordance with generally accepted construction practices, the construction contractor and his subcontractors will be required to assume sole and complete responsibility for job site conditions during the course of construction of the project, including safety and security of all persons and property. This requirement shall be made to apply continuously and not limited to normal working hours, and the construction contractor and his subcontractors further agree to defend, indemnify and hold the Architect harmless from any and all liability, real or alleged, in connection with the performance of the work on the project, except liability arising from the sole negligence of the Architect.

1.11 The General Contractor is required to designate a contact person for the project to receive all information related to job site information. The contact's name and phone number are to be given to the Owner and the Architect. Unless specified by the Owner, the General Contractor is to provide responsible, appropriate supervision on the job site for the duration of the project. General Contractor is to provide and maintain a job site phone number, e-mail or fax. Contractor is responsible for adequate supervision of all sub-trades.

1.12 The Contractor shall confine operations to the site areas permitted by law, ordinances, permits, and the contract documents and shall not unreasonably encumber the site with any materials or equipment.

1.13 No portion of the work requiring a shop drawing or sample submission (per the request of the owner, General Contractor, or Architect) shall be commenced until the submission has been reviewed and acted upon by the said party. All such portions of the work shall be in accordance with the approved shop drawings and samples.

1.14 General Contractor is responsible for visiting the job site prior to bidding and conducting reasonable inspection of existing conditions for purpose of accurately assessing the scope of work, site conditions and overall project intent. Questions arising from this site visit are to be directed to Young and Borlik Architects for clarification prior to bid.

1.15 These drawings are intended to illustrate a complete job. Unless specified, work is to include all common and necessary accessories (i.e. toilet roll holders, towel bars, mirrors, etc.), as well as all components required to meet current code requirements in the jurisdiction where work is being performed. Contractor is responsible for including sub-structure furring including floor, wall or ceiling padding to assure surfaces are plumb, level, and aligned within ¼" on an 8' measure. Concealment of Steel structural brackets, beams, tabs, bolts and protruding elements are to be considered at the time of rough frame bidding and are to be included in the construction. Furring, notching, alternative welding, and other means may be considered pending approval of the structural engineer.

1.16 Certain items, materials, and features represented within this set may not be approved as part of the building permit. Questions regarding the specifics of approvals shall be directed to local jurisdiction.

1.17 Notice: This set has been produced for the purpose of obtaining a building permit. These drawings are not intended to be accurate "as-builts," nor inclusive of all details, drawings, material specifications, etc. needed to address all possible construction issues.

1.18 These working drawings are not to be used in any construction for which building permits have not been obtained. Additionally, Young and Borlik Architects, Inc. is not responsible for the correctness of any work undertaken prematurely if it is based on plans that have not been reviewed and approved by the building department. This stipulation applies to original submittal drawings, and revisions. All drawings are preliminary until a permit is issued. Revisions and substitutions are to be submitted to the building department and must be approved prior to continuing work.

1.19 A BUILDING OPERATIONS MANUAL must be provided to the owner per Green Building Code section 4.410.1

2.0 DEMOLITION NOTES:
2.01 General Contractor to verify any existing features and finishes to remain prior to demolition. Materials, fixtures, hardware, appliances, etc which are to be re-used shall be stored and protected from damage until they are to be re-installed.

2.02 Verify with owners whether removed or unused doors, windows, fixtures, hardware, and miscellaneous materials should be saved for possible future reuse or discarded. Owner shall mark or list such items prior to demolition.

2.03 General Contractor is responsible for replacement of items damaged by demolition or removed in error.

2.04 No asbestos removal is to be undertaken by any party except as allowed by law.

2.05 General Contractor to provide Visqueen or equivalent dust screening during demolition to protect existing residence, appliances and furnishings. As appropriate, positive ventilation is to be provided for dust control.

2.06 Per 2022 CRC R408.5, General Contractor is to be responsible for removal of all construction debris and other organic materials from the structure and the site. Framed areas to be free of debris prior to sheetrocking. Underfloor and attic areas must be left clean and free of debris, cut-offs, scrap, sawdust, associated garbage, etc.

2.07 Design and installation of all temporary shoring is the sole responsibility of the general contractor. All existing framing and load transfer is to be field verified prior to shoring of any portion of the structure.

2.08 All unused and demolished electrical is to be removed back to the nearest utilized junction. No dead-hots to remain after construction. Temporary power for the duration of construction is the responsibility of the electrical contractor.

3.0 SITE DEVELOPMENT NOTES:
3.01 Verify locations of all underground utilities and services prior to excavation.

3.02 Contractor shall confirm the locations of all property boundaries for the site and verify all setback and easement locations prior to construction. Owner is responsible for providing a licensed survey and title report for contractor use, or as required by the local jurisdiction. Any discrepancies should be brought to the attention of the architect before further commencement of work.

3.03 Contractor is responsible for notifying and scheduling the project Geotechnical Engineer for site inspections and observations of excavations, drilling, drainage, backfill, etc.

3.04 Soil compaction for grading or backfilling shall be placed in accordance with the soils engineers recommendations. If there is no soils engineer, use 6" lifts to 90% compaction.

3.05 Temporary earth shoring is the responsibility of the contractor.

4.0 FOUNDATION AND CONCRETE NOTES:
4.01 For general reference see 2022 CRC, Chapter 4.

4.02 Foundation Vents - Per 2022 CRC Section R408.1 Provide vent openings of not less than 1 sf. for each 150 sf. of crawl space area. Openings shall be covered with corrosion resistant wire mesh with the least dimension being 1/8 inch thick and not exceed 1/4 inch (or per R408.2). Where moisture due to climate and groundwater conditions is not considered excessive, and the ground surface is covered by a Class 1 vapor retarder material, the required net area of vent openings may be reduced to 1 s.f. per 1,500 s.f provided vent openings are located within 3' of each corner of the building, or as approved to provide cross ventilation of the space per 2022 CRC R408.1. Unvented Crawl Spaces are to comply with R408.3

4.03 Crawl Space Access - Per 2022 CRC Section R408.4, Access shall be provided to all under-floor spaces. Access openings through the floor shall be a minimum of 18 inches by 24 inches. Openings through a perimeter wall shall be not less than 16 inches by 24 inches. Through wall access openings shall not be located under a door to the residence. Pipes, ducts and other non-structural construction shall not interfere with accessible clearances to or within under-floor areas.

4.04 Decay Protection - Per 2022 CRC, Section R317.1, wood framing less than 8" from exposed earth shall be of naturally durable or preservative treated wood. Provide 8" wood framing separation from exposed earth, or, if less than 8", use naturally durable or preservative treated wood. If earth is paved at least 18" wide w/ asphalt or concrete and draining away from building, bottom sills may be 6" above such slab.

4.05 All concrete rough opening sizes, elevations, etc. are to be verified prior to foundation pour. Locations of hold-downs, curbs, steps, curtains, plumbing and mechanical, etc. are to be coordinated by the General Contractor. Should additional clarifications to these drawings be required, the contractor should contact the Architect as early as possible. Owner is responsible for providing finish thickness information or allowances, general contractor to verify prior to pour.

4.06 All cold joints to be chipped for rough surface, sandblasted clean and free of soil or debris. Dampen surface immediately prior to concrete pour. Cold joints must be approved by the structural engineer.

4.07 Special inspection will be required for water proofing below grade. Special inspections are required per the structural engineering drawings, and as per any jurisdictional approval checklist.

4.08 Should contractor elect to use shot-crete, special inspection will be required and structural engineer must be given opportunity to revise re-bar schedule.

5.0 FLOOR PLAN NOTES:
5.01 All work is to comply with 2022 CRC, with respect to 2022 CBC, Group R occupancies.

5.02 Flame spread - Flame spread and smoke index for wall and ceiling finishes shall be in accordance with Sections R302.9.1 Through R302.9.4. Flame spread and smoke index for insulation shall be in accordance with Sections R302.10.1 Through R302.10.5.

5.03 Fireblocking - All pipe, wire, and duct penetrations in walls are to be caulked or blocked with approved materials to resist passage of flame per CRC R302.11.

5.04 Draftstopping - Per 2022 CRC, Section R302.12, Draft stops shall be installed in the following locations: horizontal floor/ceiling assemblies - where there is a usable space above and below the concealed space of a floor/ceiling assembly, including soffits and inter-floor plenum spaces. Draft stops shall be installed so that the area of the concealed space does not exceed 1,000 square feet and is divided into approximately equal areas. Draft stops are required in floor/ceiling assemblies of buildings having more than one dwelling unit and shall be installed in line with walls separating sleeping units and dwelling units.

5.05 Ventilation & Lighting - Per 2022 CRC, Section R303, All habitable rooms shall have an aggregate glazing area of not less than 8 percent of the floor area of such rooms. Natural ventilation shall be through windows, doors, louvers or other approved openings to the outdoor air. Such openings shall be provided with ready access or shall otherwise be readily controllable by the building occupants. The minimum openable area to the outdoors shall be 4 percent of the floor area being ventilated. See R303.1 Exceptions for allowed whole house mechanical ventilation systems and provided artificial light capability. Adjoining rooms and exception per Section R303.2. Rooms containing bathtubs, showers, spas and similar bathing fixtures shall be mechanically ventilated per CMC. Minimum exhaust rates shall be as specified by CMC Table 403.7. See, also door & window requirement notes, Section 8.

5.06 Egress door - Per 2022 CRC, Section R311.2. At least one egress door shall be provided for each dwelling unit. The egress door shall be sidehinged, And shall provide a minimum clear width of 32 inches (813 mm) when measured between the face of the door and the stop, with the door open 90 degrees (1.57 rad). The minimum clear height of the door opening shall not be less than 78 inches (1981 mm) in height measured from the top of the threshold to the bottom of the stop. Other doors shall not be required to comply with these minimum dimensions. Egress doors shall be readily openable from inside the dwelling without the use of a key or special knowledge or effort.

5.07 Floors and Landings at Exterior Doors - per 2022 CRC, Section R311.3, There shall be a landing or floor on each side of each exterior door. The width of each landing shall not be less than the door served. Every landing shall have a minimum dimension of 36 inches (914 mm) measured in the direction of travel. Exterior landings shall be permitted to have a slope not to exceed 1/4 unit vertical in 12 units horizontal (2-percent). Landings or finished floors at the required egress door shall not be more than 1 1/2 inches (38 mm) lower than the top of the threshold, R311.3.1 Exception: the landing or floor on the exterior side shall not be more than 7 3/4 inches (196 mm) below the top of the threshold provided the door does not swing over the landing or floor. Doors other than the required egress door shall be provided with landings or floors not more than 7 3/4 inches (196 mm) below the top of the threshold. R311.3.2 Exception: a top landing is not required where a stairway of not more than two risers is located on the exterior side of the door, provided the door does not swing over the stairway.

5.08 Hallways - Per 2022 CRC, Section R311.6, The minimum width of a hallway shall be not less than 3 feet.

5.09 Fire Sprinklers - Per 2022 CRC, Section R313. Verify applicable fire sprinkler requirements for remodel and new construction projects with the local building and fire departments prior to construction. Fire sprinkler design drawings are to be a deferred submittal by the fire sprinkler contractor to be approved by the fire department and designed for local flow rates and monitoring as required.

5.10 Smoke Detectors - Install per 2022 CRC, Sections R314. Detectors shall be installed in accordance with approved manufacturer's instructions, comply with UL 217 and NFPA 72. Detectors shall be mounted on the ceiling or high on wall in each sleeping area and at a point located adjacent in the corridor or area giving access to each separate sleeping area, and at least one on each level of the building as required by the above section and all other applicable codes. Smoke detectors shall receive their primary power from the building wiring (110 V hard-wired) with battery back-up power. Smoke and fire alarms shall be interconnected in such a manner as activation of one alarm will activate all the alarms.

5.11 Carbon Monoxide Alarms- Install per 2022 CRC, Sections R315. For new construction, an approved carbon monoxide alarm shall be installed in dwelling units and in sleeping units within which fuel-burning appliances are installed and in dwelling units that have attached garages. Carbon monoxide alarms shall be listed as complying with UL 2034 and be installed and maintained in accordance with NFPA 720 and the manufacturer's instructions.

5.12 Per 2022 CGBSC, Section 4.504 Pollutant Control. All finishes are to comply with V.O.C. and formaldehyde limits set forth in Tables 4.504. (1, 2, 3, and 5). Verification shall be required as requested by the enforcement agency.

5.13 All joints and openings between conditioned and unconditioned space are to be closed or sealed.

6.0 ROOF PLAN NOTES:
6.01 Roof Ventilation - Per 2022 CRC, Section R806.2, The minimum net free ventilating area shall be 1/150 of the area of the vented space. However this may be reduced to 1/300 when provided in accordance with exception listed in R806.2. There shall be a minimum of 1" of clear space for venting between roof sheathing and insulation and at the location of the vent, R806.3. Unvented attic and unvented enclosed rafter assemblies are permitted when all conditions of CRC Section R806.5 are met.

6.02 Attic Access - Per 2022 CRC, Section R807.1, Buildings with combustible ceiling or roof construction shall have an attic access opening to attic areas that exceed 30 square feet (2.8 m2) and have a vertical height of 30 inches (762 mm) or greater. The vertical height shall be measured from the top of the ceiling framing members to the underside of the roof framing members. The rough-framed opening shall not be less than 22 inches by 30 inches (559 mm by 762 mm) and shall be located in a hallway or other readily accessible location.

6.03 Conventional light wood framing per 2022 CRC, Chapter 8

6.04 Roof Assemblies - Per 2022 CRC, Chapter 9. Roofs shall be covered with materials as set forth in Sections R904 and R905, and shall be tested in accordance with UL790 or ASTM E108. Roof decks shall be covered with approved roof coverings secured to the building or structure in accordance with the provision of chapter 9

7.0 GENERAL STRUCTURAL NOTES:
7.01 Shear Components - General Contractor is responsible for having a general understanding of shear resisting elements and components within this design. Shear transfer and hardware is to be installed per manufacturer's requirements.

7.02 Note that structural detailing within the Structural sheets may indicate hardware, brackets, bolted connections and metal fasteners which protrude from the plane of the rough framing. It is the Framing contractors responsibility to include furring strips, taper strips, fill wedges and blocking as required to bring finish surfaces past the plane of rough structural components. Alternative detailing, such as welded rods in place of bolted connections may be substituted only as approved by the Structural Engineer.

7.03 Lumber Quality - Contractor is responsible for reviewing lumber quality at the time of each delivery. Excessively wet, visually cupped, warped, or knotty material is not to be accepted on the job site. Contractor is responsible for storing materials in a neat, dry, level environment where damage will not occur.

7.04 Structural drawings, and detailing by others are included as a part of this contract for construction.

7.05 All components shall be fastened or nailed per 2022 CRC Table R602.3(1) unless provided otherwise by Structural Drawings. It is the responsibility of the General Contractor to coordinate requirements for Notching and Boring per 2022 CRC, Section R602.6 Drilling and Notching of Studs, Top Plate R602.6.1, Figure R602.6(2) and Figure R602.6.1 with any associated sub-trades. Verify furring and blocking, up-size framing where required.

8.0 DOOR, WINDOW AND SKYLIGHT NOTES: Per 2022 CRC, Section R609.
8.01 Unless otherwise requested by the owner, the contractor shall be responsible for the verification of all door and window units, rough openings, operation characteristics, egress conditions, etc. prior to final order of doors and windows. The owner, contractor, architect, and window supplier should be given the opportunity to walk through the entire job, review shop drawings and verify each unit prior to order.

8.02 Safety Glazing - Per 2022 CRC, Except as indicated in Section R308.1.1, each pane of glazing installed in hazardous locations as defined in Section R308.4 (R308.4.1 through R308.4.7) shall be provided with safety glazing. Safety/ tempered glass or plastic is required at all glazed doors, glazing within 24" of doors, within 18" of any floor, and within 60" of floors in bathtubs, showers hot tubs, whirlpools, saunas, steam rooms and stairs / ramps. Each unit of safety glazing shall be permanently identified by manufacturer, or for other than tempered glass, the building inspector, at their discretion, may approve a certificate. Site built windows per Section R308.5.

8.03 Egress Windows - Per 2022 CRC, Section R310.2.1, all escape or rescue openings shall have a net clear opening of not less than 5.7 square feet. The minimum net clear height dimension shall be 24 inches and the net clear width shall be not less than 20 inches. When windows are provided as a means of egress, escape or rescue, they shall have a finished sill height of not more than 44 inches above the floor per CRC R310.2.2. See CRC R312.1.3 for opening limiting device and window fall protection requirements and egress operation. Where a window sill is located within 24" of the finish floor, the window must be equipped with a limiting device to prevent the passage of a 4" sphere.

8.04 Skylights - shall comply with 2022 CRC, Section R308.6. Contractor shall provide ICC numbers for prefabricated skylights and assemblies to Building Inspector for approval prior to purchase and installation. Indicate glazing type. Refer to Section R308.6.3 Through R308.6.7 for screens.

9.0 STAIRWAYS: Per 2022 CRC, Section R311.7
9.01 Width - Per 2022 CRC, Section R311.7.1, stairways shall not be less than 36 inches in clear width at all points above the permitted handrail height and below the required headroom height. Handrails shall not project more than 4.5 inches on either side of the stairway and the minimum clear width of the stairway at and below the handrail height, including treads and landings, shall not be less than 31 1/2 inches where a handrail is installed on one side and 27 inches where handrails are provided on both sides. Exception per R311.7.10.1.

9.02 Headroom - Per 2022 CRC, Section R311.7.2, The minimum headroom in all parts of the stairway shall not be less than 6 feet 8 inches measured vertically from the sloped line adjoining the tread nosing or from the floor surface of the landing or platform on that portion of the stairway.

9.03 Vertical Rise - Per 2022 CRC, Section R311.7.3, A flight of stairs shall not have a vertical rise larger than 151 inches between floor levels or landings.

9.04 Walkline - Per 2022 CRC, Section R311.7.4, the walkline across winder treads shall be concentric to the curved direction of travel through the turn and located 12 inches from the side where the winders are narrower. The 12-inch dimension shall be measured from the widest point of the clear stair width at the walking surface of the winder. If winders are adjacent within the flight, the point of the widest clear stair width of the adjacent winders shall be used.

9.05 Risers - Per 2022 CRC, Section R311.7.5.1, The maximum riser height shall be not more than 7 3/4 inches.

9.06 Treads - Per 2022 CRC, Section R311.7.5.2, The minimum tread depth shall be not less than 10 inches. Winder treads per R311.7.5.2.1, shall have a minimum tread depth of 10 inches measured between the vertical planes of the foremost projection of adjacent treads at the intersections with the walkline. Winder treads shall have a tread depth of not less than 6 inches at any point within the clear width of the stair.

9.07 Nosing - Per 2022 CRC, Section R311.7.5.3, The radius of curvature at the nosing shall be no greater than 9/16 inch. A nosing not less than 3/4 inch but not more than 1-1/4 inches shall be provided on Stairways with solid risers.

9.08 Landings for Stairways - Per 2022 CRC, Section R311.7.6, There shall be a floor or landing at the top and bottom of each stairway. The minimum width perpendicular to the direction of travel shall be no less than the width of the flight served. Landings of shapes other than square or rectangular shall be permitted provided the depth at the walk line and the total area is not less than that of a quarter circle with a radius equal to the required landing width. Where the stairway has a straight run, the minimum depth in the direction of travel shall be not less than 36 inches. Exception: A floor or landing is not required at the top of an interior flight of stairs, including stairs in an enclosed garage, provided a door does not swing over the stairs.

9.09 Stairway Walking Surface - Per 2022 CRC, Section R311.7.7, the walking surface of treads and landings of stairways shall be sloped no steeper than one unit vertical in 48 inches horizontal (2-percent slope).

9.10 Handrails Height and Continuity - Per 2022 CRC, Section R311.7.8.1-2, Handrail height, measured vertically from the sloped plane adjoining the tread nosing, or finish surface of ramp slope, shall be not less than 34 inches and not more than 38 inches. Handrails for stairways shall be continuous for the full length of the flight, from a point directly above the top riser of the flight to a point directly above the lowest riser of the flight. Handrail ends shall be returned or shall terminate in newel posts or safety terminals. handrails adjacent to a wall shall have a space of not less than 1-1/2 inch between the wall and the handrails.

9.11 Grip Size - Per 2022 CRC, Section R311.7.8.5, All required handrails shall be either Type I circular with diameter minimum 1-1/4 inch maximum 2 inch ; noncircular handrails must have a perimeter of minimum 4 inch maximum 6-1/4 inch with a maximum cross dimension of 2-1/4"; or type II or provide equivalent graspability.

9.12 Iilumination - Per 2022 CRC, Section R311.7.9. All stairs shall be provided with illumination in accordance with Section R303.7 and R303.8.

9.13 Special Stairways - Per 2022 CRC, Section R311.7.10.

9.14 Guards - Per 2022 CRC, Section R312.1, Guard hall be located along open-sided walking surfaces, including stairs, ramps and landings, that are located more than 30 inches measured vertically to the floor or grade below at any point within 36 inches horizontally to the edge of the open side. Required guard at open-sided walking surfaces, including stairs, porches, balconies or landings, shall be not less than 42 inches high.

9.15 Opening Limitations - Per 2022 CRC, Section R312.1.3, Required guards shall not have opening from the walking surface to the required guard height which allow passage of a sphere 4 inches in diameter.

9.16 Handrails and Guardrails shall resist a single concentrated load of 200 pounds.

9.17 Under Stair Fire Protection - Walls and soffits of enclosed closet or storage space under stairs shall be protected on the enclosed side with minimum one-hour fire protection, or use 5/8" type "x" gypsum board.

10.0 FIREPLACE NOTES: Per 2022 CRC, Chapter10
10.01 New fireplace to be EPA approved direct vent, sealed-combustion type gas fireplaces. Effective November 1, 2016, wood-burning devices shall not be installed in new building construction.

10.02 Factory-built Fireplaces - Per 2022 CRC, Section R1004, Factory-built fireplaces shall be listed and labeled and shall be installed in accordance with the conditions of the listing. Factory-built fireplaces shall be tested in accordance with UL 127, R1004.1, Hearth extensions of approved factory-built fireplaces shall be installed in accordance with the listing of the fireplace and shall comply with UL 1618, R1004.2. Decorative shrouds per RI004.3. Contractor shall provide ICC numbers for prefabricated metal insert fireplaces and assemblies to building inspector for approval prior to purchase and installation.

10.03 Exterior Air Supply - Per 2022 CRC, Section R1006, All fireplace units shall be equipped with an exterior air supply to assure proper fuel combustion unless the room is mechanically ventilated and controlled so that the indoor pressure is neutral or positive.

10.04 Masonry fireplaces shall be constructed in accordance with 2022 CRC section R1001.1 and the applicable provisions of chapters 3 and 4.

10.04 Masonry chimneys shall be constructed in accordance with 2022 CRC section R1003.1 with respect to foundations, seismic anchorage and reinforcement, dimensions, termination caps, clearances, materials, and all other applicable components.

11.0 MECHANICAL NOTES:
11.01 All work shall comply with the 2022 California Mechanical Code (CMC) and all applicable federal, state, and local codes. Mechanical work is to be bid design/build and provided complete per code.

11.03 Mechanical System Design - Mechanical contractor to accept sole responsibility for proper design and installation of mechanical system. Mechanical contractor to coordinate with the general contractor to design and install suitable mechanical distribution system per Title 24. See sheet index for location of Title 24 conformance worksheets and energy compliance notes within this set.

11.04 Duct systems are sized, designed, and equipment is selected using the following methods:
1. Establish heat loss and heat gain values according to ANSI/ACCA 2 manual J-2016 or equivalent.
2. Size duct systems according to ANSI/ACCA 1 manual D-2016 or equivalent.
3. Select heating and cooling equipment according to ANSI/ACCA 3 manual S-2014 or equivalent.

11.05 HVAC system installers required to be trained and certified in the proper installation of HVAC systems.

11.06 Special inspectors employed by the enforcing agency must be qualified and able to demonstrate competence in the discipline they are inspecting.

12.0 ELECTRICAL NOTES:
12.01 All work shall comply with the 2022 California Electrical Code (CEC) and all applicable federal, state, and local states and ordinances. Electrical work is to be bid design/build and provided complete per code.

12.02 All electrical load sheets and calculations required by the building department shall be the responsibility of the Electrical Subcontractor.

12.03 Verify all fixture locations with owner prior to installation. All recessed fixtures to be approved by owner. Coordinate locations of recessed fixtures with framing, provide owner an opportunity to walk at "box-out" and include relocations as requested. Decorative fixtures are to be supplied by owner.

12.04 Electrical subcontractor is to determine service requirements for the new work prior to bid. Verify that existing service is sufficient to handle increased loads. Locate new sub-panels as directed by owner. All circuit panels are to be labeled.

13.00 PLUMBING NOTES:
13.01 All work shall comply with the 2022 California Plumbing Code (CPC) and all applicable federal, state, and local codes. plumbing work is to be bid design/build and provided complete per code.

13.02 Mechanical and plumbing subcontractors are responsible for assessing existing services for compliance with proposed service requirements and recommending any measures required to handle additional loads prior to bid.

13.03 Plumbing subcontractor is required to coordinate with general contractor and framing contractor to ensure proper notching and boring of framing members per CRC R602 and structural requirements within this set. General contractor is to verify plumbing and mechanical runs within framing spaces. It is the general contractors responsibility to notify architect of conflicts prior to the onset of rough framing. When possible, locate all plumbing vents, roof jacks, vents and flues to less visible side and rear roof slopes (rather than in primary view).

GENERAL NOTES

1

Copyright 2025 YOUNG AND BORLIK ARCHITECTS INC. All designs, drawings, and written materials appearing herein, are protected and constitute original and unpublished work of the Architect and may not be revised, re-used, copied, or disclosed without the written consent of the Architect. Equipment manufactured by others is excluded. Drawings and specifications are instruments of architectural service, and shall remain the the property of the Architect. Use is restricted to the site for which they are prepared.

ISSUE LOG

DESIGN REVIEW SUBMITTAL
MAY 20, 2025

DR PLAN CHECK RESUBMITTAL
JUL. 15, 2025

DR PLAN CHECK RESUBMITTAL
OCT. 03, 2025

LICENSED ARCHITECT ★ STATE OF CALIFORNIA ★ ANDREW ERNLE YOUNG C-21679 REN. 4-30-25

Young & Borlik Architects
4962 EL CAMINO REAL, STE 218
LOS ALTOS, CALIFORNIA 94022
650-688-1950 | YBarchitects.com

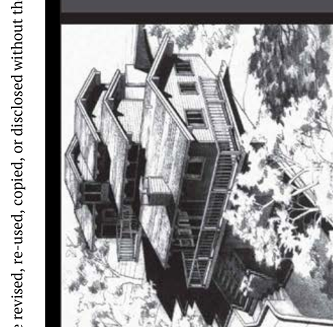

NEW RESIDENCE FOR:
ERIN AND EMILY CONLEY
962 HILLCREST DRIVE
REDWOOD CITY, CA 94062

A.P.N. 058-263-040

CHECKED AEY

DRAWN OH, MC

DATE SEP. 23. 2024

JOB # CONLEY

A0.2

REFERENCE SHEET # / COMPLIANCE DOCUMENTATION (NOTE# OR DETAIL#)	Y	N/A	RESPON. PARTY
SHEET A0.4, A2.3 SEE CIVIL PLANS	X		
SHEET A0.4, A2.3 SEE CIVIL PLANS		X	
SHEET A2.2.1, A2.3, SHEET E2.2 TWO CHARGERS PROPOSED	X		
SHEET A2.2.1, A2.3, SHEET E2.2 TWO CHARGERS PROPOSED		X	
SHEET A2.2.1, A2.3, SHEET E2.2 TWO CHARGERS PROPOSED	X		
SHEET A2.2.1, A2.3, SHEET E2.2 TWO CHARGERS PROPOSED		X	

CHAPTER 3
GREEN BUILDING
SECTION 301 GENERAL

301.1 SCOPE. Buildings shall be designed to include the green building measures specified as mandatory in the application checklists contained in this code. Voluntary green building measures are also included in the application checklists and may be included in the design and construction of structures covered by this code, but are not required unless adopted by a city, county, or city and county as specified in Section 101.7.

301.1.1 Additions and alterations. [HCD] The mandatory provisions of Chapter 4 shall be applied to additions or alterations of existing residential buildings where the addition or alteration increases the building's conditioned area, volume, or size. The requirements shall apply only to and/or within the specific area of the addition or alteration.

Note: On and after January 1, 2014, residential buildings undergoing permitted alterations, additions, or improvements shall replace noncompliant plumbing fixtures with water-conserving plumbing fixtures. Plumbing fixture replacement is required prior to issuance of a certificate of final completion, certificate of occupancy or final permit approval by the local building department. See Civil Code Section 1101.1, et seq., for the definition of a noncompliant plumbing fixture, types of residential buildings affected and other important enactment dates.

301.2 LOW-RISE AND HIGH-RISE RESIDENTIAL BUILDINGS. [HCD] The provisions of individual sections of CALGreen may apply to either low-rise residential buildings high-rise residential buildings, or both. Individual sections will be designated by banners to indicate where the section applies specifically to low-rise only (LR) or high-rise only (HR). When the section applies to both low-rise and high-rise buildings, no banner will be used.

SECTION 302 MIXED OCCUPANCY BUILDINGS

302.1 MIXED OCCUPANCY BUILDINGS. In mixed occupancy buildings, each portion of a building shall comply with the specific green building measures applicable to each specific occupancy.

ABBREVIATION DEFINITIONS:

HCD	Department of Housing and Community Development
BSC	California Building Standards Commission
DSA-SS	Division of the State Architect, Structural Safety
OSHPD	Office of Statewide Health Planning and Development
LR	Low Rise
HR	High Rise
AA	Additions and Alterations
N	New

CHAPTER 4
RESIDENTIAL MANDATORY MEASURES
DIVISION 4.1 PLANNING AND DESIGN
SECTION 4.102 DEFINITIONS
4.102.1 DEFINITIONS
The following terms are defined in Chapter 2 *(and are included here for reference)*

FRENCH DRAIN. A trench, hole or other depressed area loosely filled with rock, gravel, fragments of brick or similar pervious material used to collect or channel drainage or runoff water.

WATTLES. Wattles are used to reduce sediment in runoff. Wattles are often constructed of natural plant materials such as hay, straw or similar material shaped in the form of tubes and placed on a downflow slope. Wattles are also used for perimeter and inlet controls.

4.106 SITE DEVELOPMENT
4.106.1 GENERAL. Preservation and use of available natural resources shall be accomplished through evaluation and careful planning to minimize negative effects on the site and adjacent areas. Preservation of slopes, management of storm water drainage and erosion controls shall comply with this section.

4.106.2 STORM WATER DRAINAGE AND RETENTION DURING CONSTRUCTION. Projects which disturb less than one acre of soil and are not part of a larger common plan of development which in total disturbs one acre or more, shall manage storm water drainage during construction. In order to manage storm water drainage during construction, one or more of the following measures shall be implemented to prevent flooding of adjacent property, prevent erosion and retain soil runoff on the site.

1. Retention basins of sufficient size shall be utilized to retain storm water on the site.
2. Where storm water is conveyed to a public drainage system, collection point, gutter or similar disposal method, water shall be filtered by use of a barrier system, wattle or other method approved by the enforcing agency.
3. Compliance with a lawfully enacted storm water management ordinance.

Note: Refer to the State Water Resources Control Board for projects which disturb one acre or more of soil, or are part of a larger common plan of development which in total disturbs one acre or more of soil.

(Website: https://www.waterboards.ca.gov/water_issues/programs/stormwater/construction.html)

4.106.3 GRADING AND PAVING. Construction plans shall indicate how the site grading or drainage system will manage all surface water flows to keep water from entering buildings. Examples of methods to manage surface water include, but are not limited to, the following:

1. Swales
2. Water collection and disposal systems
3. French drains
4. Water retention gardens
5. Other water measures which keep surface water away from buildings and aid in groundwater recharge.

Exception: Additions and alterations not altering the drainage path.

4.106.4 Electric vehicle (EV) charging for new construction. New construction shall comply with Sections 4.106.4.1, 4.106.4.2, or 4.106.4.3 to facilitate future installation and use of EV chargers. Electric vehicle supply equipment (EVSE) shall be installed in accordance with the *California Electrical Code*, Article 625.

Exceptions:
1. On a case-by-case basis, where the local enforcing agency has determined EV charging and infrastructure are not feasible based upon one or more of the following conditions:
   - 1.1 Where there is no commercial power supply.
   - 1.2 Where there is evidence substantiating that meeting the requirements will alter the local utility infrastructure design requirements on the utility side of the meter so as to increase the utility side cost to the homeowner or the developer by more than $400.00 per dwelling unit.
2. Accessory Dwelling Units (ADU) and Junior Accessory Dwelling Units (JADU) without additional parking facilities.

4.106.4.1 New one- and two-family dwellings and townhouses with attached private garages. For each dwelling unit, install a listed raceway to accommodate a dedicated 208/240-volt branch circuit. The raceway shall not be less than trade size 1 (nominal 1-inch inside diameter). The raceway shall originate at the main service or subpanel and shall terminate into a listed cabinet, box or other enclosure in close proximity to the proposed location of an EV charger. Raceways are required to be continuous at enclosed, inaccessible or concealed areas and spaces. The service panel and/or subpanel shall provide capacity to install a 40-ampere minimum dedicated branch circuit and space(s) reserved to permit installation of a branch circuit overcurrent protective device.

4.106.4.1.1 Identification. The service panel or subpanel circuit directory shall identify the overcurrent protective device space(s) reserved for future EV charging as "EV CAPABLE". The raceway termination location shall be permanently and visibly marked as "EV CAPABLE".

4.106.4.2 New multifamily dwellings. If residential parking is available, ten (10) percent of the total number of parking spaces on a building site, provided for all types of parking facilities, shall be electric vehicle charging spaces (EV spaces) capable of supporting future EVSE. Calculations for the required number of EV spaces shall be rounded up to the nearest whole number.

Notes:
1. Construction documents are intended to demonstrate the project's capability and capacity for facilitating future EV charging.
2. There is no requirement for EV spaces to be constructed or available until EV chargers are installed for use.

4.106.4.2.1 Electric vehicle charging space (EV space) locations. Construction documents shall indicate the location of proposed EV spaces. Where common use parking is provided at least one EV space shall be located in the common use parking area and shall be available for use by all residents.

REFERENCE SHEET # / COMPLIANCE DOCUMENTATION (NOTE# OR DETAIL#)	Y	N/A	RESPON. PARTY
SHEET A2.2.1, A2.3, SHEET E2.2 TWO CHARGERS PROPOSED	X		
SHEET A2.2.1, A2.3, SHEET E2.2 TWO CHARGERS PROPOSED		X	
SHEET A2.2.1, A2.3, SHEET E2.2	X		
SHEET A2.2.1, A2.3, SHEET E2.2		X	
SHEET A2.2.1, A2.3, SHEET E2.2	X		
SHEET A2.2.1, A2.3, SHEET E2.2		X	
SHEET A2.2.1, A2.3, SHEET MEP1.0	X		
SHEET A2.2.1, A2.3, SHEET MEP1.0		X	
SHEET A2.2.1, A2.3, SHEET MEP1.0	X		
SHEET A2.2.1, A2.3, SHEET MEP1.0		X	
SHEET A2.2.1, A2.3, SHEET MEP1.0	X		
SHEET A2.3, SHEET MEP1.0	X		

4.106.4.2.1 Electric Vehicle Charging Stations (EVCS) When EV chargers are installed, EV spaces required by Section 4.106.2.2, Item 3, shall comply with at least one of the following options:

1. The EV space shall be located adjacent to an accessible parking space meeting the requirements of the *California Building Code,* Chapter 11A, to allow use of the EV charger from the accessible parking space.
2. The EV space shall be located on an accessible route, as defined in the *California Building Code*, Chapter 2, to the building.

Exception: Electric vehicle charging stations designed and constructed in compliance with the *California Building Code*, Chapter 11B, are not required to comply with Section 4.106.4.2.1.1 and Section 4.106.4.2.2, Item 3.

Note: Electric Vehicle charging stations serving public housing are required to comply with the *California Building Code*, Chapter 11B.

4.106.4.2.2 Electric vehicle charging space (EV space) dimensions. The EV space shall be designed to comply with the following:

1. The minimum length of each EV space shall be 18 feet (5486 mm).
2. The minimum width of each EV space shall be 9 feet (2743 mm).
3. One in every 25 EV spaces, but not less than one EV space, shall have an 8-foot (2438 mm) wide minimum aisle. A 5-foot (1524 mm) wide minimum aisle shall be permitted provided the minimum width of the EV space is 12 feet (3658 mm).
   - a. Surface slope for this EV space and the aisle shall not exceed 1 unit vertical in 48 units horizontal (2.083 percent slope) in any direction.

4.106.4.2.3 Single EV space required. Install a listed raceway capable of accommodating a 208/240-volt dedicated branch circuit. The raceway shall not be less than trade size 1 (nominal 1-inch inside diameter). The raceway shall originate at the main service or subpanel and shall terminate into a listed cabinet, box or enclosure in close proximity to the proposed location of the EV space. Construction documents shall identify the raceway termination point. The service panel and/or subpanel shall provide capacity to install a 40-ampere minimum dedicated branch circuit and space(s) reserved to permit installation of a branch circuit overcurrent protective device.

4.106.4.2.4 Multiple EV spaces required. Construction documents shall indicate the raceway termination point and proposed location of future EV spaces and EV chargers. Construction documents shall also provide information on amperage of future EVSE, raceway method(s), wiring schematics and electrical load calculations to verify that the electrical panel service capacity and electrical system, including any on-site distribution transformer(s), have sufficient capacity to simultaneously charge all EVs at all required EV spaces at the full rated amperage of the EVSE. Plan design shall be based upon a 40-ampere minimum branch circuit. Required raceways and related components that are planned to be installed underground, enclosed, inaccessible or in concealed areas and spaces shall be installed at the time of original construction.

4.106.4.2.5 Identification. The service panel or subpanel circuit directory shall identify the overcurrent protective device space(s) reserved for future EV charging purposes as "EV CAPABLE" in accordance with the *California Electrical Code.*

4.106.4.3 New hotels and motels. All newly constructed hotels and motels shall provide EV spaces capable of supporting future installation of EVSE. The construction documents shall identify the location of the EV spaces.

Notes:

1. Construction documents are intended to demonstrate the project's capability and capacity or facilitating future EV charging.
2. There is no requirement for EV spaces to be constructed or available until EV chargers are installed for use.

4.106.4.3.1 Number of required EV spaces. The number of required EV spaces shall be based on the total number of parking spaces provided for all types of parking facilities in accordance with Table 4.106.4.3.1. Calculations for the required number of EV spaces shall be rounded up to the nearest whole number.

TABLE 4.106.4.3.1

TOTAL NUMBER OF PARKING SPACES	NUMBER OF REQUIRED EV SPACES
0-9	0
10-25	1
26-50	2
51-75	4
76-100	5
101-150	7
151-200	10
201 and over	6 percent of total

4.106.4.3.2 Electric vehicle charging space (EV space) dimensions. The EV spaces shall be designed to comply with the following:

1. The minimum length of each EV space shall be 18 feet (5486mm).
2. The minimum width of each EV space shall be 9 feet (2743mm)

4.106.4.3.3 Single EV space required. When a single EV space is required, the EV space shall be designed in accordance with Section 4.106.4.2.3.

4.106.4.3.4 Multiple EV spaces required. When multiple EV spaces are required, the EV spaces shall be designed in accordance with Section 4.106.4.2.4.

4.106.4.3.5 Identification. The service panels or sub-panels shall be identified in accordance with Section 4.106.4.2.5.

4.106.4.3.6 Accessible EV spaces. In addition to the requirements in Section 4.106.4.3, EV spaces for hotels/motels and all EVSE, when installed, shall comply with the accessibility provisions for the EV charging stations in the *California Building Code*, Chapter 11B.

DIVISION 4.2 ENERGY EFFICIENCY
4.201 GENERAL
4.201.1 SCOPE. For the purposes of mandatory energy efficiency standards in this code, the California Energy Commission will continue to adopt mandatory standards.

DIVISION 4.3 WATER EFFICIENCY AND CONSERVATION
4.303 INDOOR WATER USE
4.303.1 WATER CONSERVING PLUMBING FIXTURES AND FITTINGS. Plumbing fixtures (water closets and urinals) and fittings (faucets and showerheads) shall comply with the sections 4.303.1.1, 4.303.1.2, 4.303.1.3, and 4.303.4.4.

Note: All noncompliant plumbing fixtures in any residential real property shall be replaced with water-conserving plumbing fixtures. Plumbing fixture replacement is required prior to issuance of a certificate of final completion, certificate of occupancy, or final permit approval by the local building department. See Civil Code Section 1101.1, et seq., for the definition of a noncompliant plumbing fixture, types of residential buildings affected and other important enactment dates.

4.303.1.1 Water Closets. The effective flush volume of all water closets shall not exceed 1.28 gallons per flush. Tank-type water closets shall be certified to the performance criteria of the U.S. EPA WaterSense Specification for Tank-type Toilets.

Note: The effective flush volume of dual flush toilets is defined as the composite, average flush volume of two reduced flushes and one full flush.

4.303.1.2 Urinals. The effective flush volume of wall mounted urinals shall not exceed 0.125 gallons per flush. The effective flush volume of all other urinals shall not exceed 0.5 gallons per flush.

4.303.1.3 Showerheads.

4.303.1.3.1 Single Showerhead. Showerheads shall have a maximum flow rate of not more than 1.8 gallons per minute at 80 psi. Showerheads shall be certified to the performance criteria of the U.S. EPA WaterSense Specification for Showerheads.

4.303.1.3.2 Multiple showerheads serving one shower. When a shower is served by more than one showerhead, the combined flow rate of all the showerheads and/or other shower outlets controlled by a single valve shall not exceed 1.8 gallons per minute at 80 psi, or the shower shall be designed to only allow one shower outlet to be in operation at a time.

Note: A hand-held shower shall be considered a showerhead.

4.303.1.4 Faucets.

4.303.1.4.1 Residential Lavatory Faucets. The maximum flow rate of residential lavatory faucets shall not exceed 1.2 gallons per minute at 60 psi. The minimum flow rate of residential lavatory faucets shall not be less than 0.8 gallons per minute at 20 psi.

4.303.1.4.2 Lavatory Faucets in Common and Public Use Areas. The maximum flow rate of lavatory faucets installed in common and public use areas (outside of dwellings or sleeping units) in residential buildings shall not exceed 0.5 gallons per minute at 60 psi.

4.303.1.4.3 Metering Faucets. Metering faucets when installed in residential buildings shall not deliver more than 0.2 gallons per cycle.

4.303.1.4.4 Kitchen Faucets. The maximum flow rate of kitchen faucets shall not exceed 1.8 gallons per minute at 60 psi. Kitchen faucets may temporarily increase the flow above the maximum rate, but not to exceed 2.2 gallons per minute at 60 psi, and must default to a maximum flow rate of 1.8 gallons per minute at 60 psi.

Note: Where complying faucets are unavailable, aerators or other means may be used to achieve reduction.

4.303.2 STANDARDS FOR PLUMBING FIXTURES AND FITTINGS. Plumbing fixtures and fittings shall be installed in accordance with the *California Plumbing Code*, and shall meet the applicable standards referenced in Table 1701.1 of the *California Plumbing Code*.

NOTE:
THIS TABLE COMPILES THE DATA IN SECTION 4.303.1, AND IS INCLUDED AS A CONVENIENCE FOR THE USER.

TABLE - MAXIMUM FIXTURE WATER USE

FIXTURE TYPE	FLOW RATE
SHOWER HEADS (RESIDENTIAL)	1.8 GMP @ 80 PSI
LAVATORY FAUCETS (RESIDENTIAL)	MAX. 1.2 GPM @ 60 PSI MIN. 0.8 GPM @ 20 PSI
LAVATORY FAUCETS IN COMMON & PUBLIC USE AREAS	0.5 GPM @ 60 PSI
KITCHEN FAUCETS	1.8 GPM @ 60 PSI
METERING FAUCETS	0.2 GAL/CYCLE
WATER CLOSET	1.28 GAL/FLUSH
URINALS	0.125 GAL/FLUSH

4.304 OUTDOOR WATER USE
4.304.1 OUTDOOR POTABLE WATER USE IN LANDSCAPE AREAS. Residential developments shall comply with a local water efficient landscape ordinance or the current California Department of Water Resources' Model Water Efficient Landscape Ordinance (MWELO), whichever is more stringent.

NOTES:

1. The Model Water Efficient Landscape Ordinance (MWELO) is located in the *California Code Regulations,* Title 23, Chapter 2.7, Division 2. MWELO and supporting documents, including water budget calculator, are available at: https://www.water.ca.gov/

REFERENCE SHEET # / COMPLIANCE DOCUMENTATION (NOTE# OR DETAIL#)	Y	N/A	RESPON. PARTY
SHEET A2.3	X		
SHEET A2.3	X		
SHEET A2.3	X		
SHEET A2.3	X		
SHEET A2.3	X		
SHEET A2.3	X		
SHEET A2.3	X		
SHEET A2.3	X		
	X		

DIVISION 4.4 MATERIAL CONSERVATION AND RESOURCE EFFICIENCY
4.406 ENHANCED DURABILITY AND REDUCED MAINTENANCE
4.406.1 RODENT PROOFING. Annular spaces around pipes, electric cables, conduits or other openings in sole/bottom plates at exterior walls shall be protected against the passage of rodents by closing such openings with cement mortar, concrete masonry or a similar method acceptable to the enforcing agency.

4.408 CONSTRUCTION WASTE REDUCTION, DISPOSAL AND RECYCLING
4.408.1 CONSTRUCTION WASTE MANAGEMENT. Recycle and/or salvage for reuse a minimum of 65 percent of the non-hazardous construction and demolition waste in accordance with either Section 4.408.2, 4.408.3 or 4.408.4, or meet a more stringent local construction and demolition waste management ordinance.

Exceptions:

1. Excavated soil and land-clearing debris.
2. Alternate waste reduction methods developed by working with local agencies if diversion or recycle facilities capable of compliance with this item do not exist or are not located reasonably close to the jobsite.
3. The enforcing agency may make exceptions to the requirements of this section when isolated jobsites are located in areas beyond the haul boundaries of the diversion facility.

4.408.2 CONSTRUCTION WASTE MANAGEMENT PLAN. Submit a construction waste management plan in conformance with Items 1 through 5. The construction waste management plan shall be updated as necessary and shall be available during construction for examination by the enforcing agency.

1. Identify the construction and demolition waste materials to be diverted from disposal by recycling, reuse on the project or salvage for future use or sale.
2. Specify if construction and demolition waste materials will be sorted on-site (source separated) or bulk mixed (single stream).
3. Identify diversion facilities where the construction and demolition waste material collected will be taken.
4. Identify construction methods employed to reduce the amount of construction and demolition waste generated.
5. Specify that the amount of construction and demolition waste materials diverted shall be calculated by weight or volume, but not by both.

4.408.3 WASTE MANAGEMENT COMPANY. Utilize a waste management company, approved by the enforcing agency, which can provide verifiable documentation that the percentage of construction and demolition waste material diverted from the landfill complies with Section 4.408.1.

Note: The owner or contractor may make the determination if the construction and demolition waste materials will be diverted by a waste management company.

4.408.4 WASTE STREAM REDUCTION ALTERNATIVE [LR]. Projects that generate a total combined weight of construction and demolition waste disposed of in landfills, which do not exceed 3.4 lbs./sq.ft. of the building area shall meet the minimum 65% construction waste reduction requirement in Section 4.408.1

4.408.4.1 WASTE STREAM REDUCTION ALTERNATIVE. Projects that generate a total combined weight of construction and demolition waste disposed of in landfills, which do not exceed 2 pounds per square foot of the building area, shall meet the minimum 65% construction waste reduction requirement in Section 4.408.1

4.408.5 DOCUMENTATION. Documentation shall be provided to the enforcing agency which demonstrates compliance with Section 4.408.2, Items 1 through 5, Section 4.408.3 or Section 4.408.4.

Notes:

1. Sample forms found in "A Guide to the California Green Building Standards Code (Residential)" located at www.hcd.ca.gov/CALGreen.html may be used to assist in documenting compliance with this section.
2. Mixed construction and demolition debris (C & D) processors can be located at the California Department of Resources Recycling and Recovery (CalRecycle).

4.410 BUILDING MAINTENANCE AND OPERATION
4.410.1 OPERATION AND MAINTENANCE MANUAL. At the time of final inspection, a manual, compact disc, web-based reference or other media acceptable to the enforcing agency which includes all of the following shall be placed in the building:

1. Directions to the owner or occupant that the manual shall remain with the building throughout the life cycle of the structure.
2. Operation and maintenance instructions for the following:
   - a. Equipment and appliances, including water-saving devices and systems, HVAC systems, photovoltaic systems, electric vehicle chargers, water-heating systems and other major appliances and equipment.
   - b. Roof and yard drainage, including gutters and downspouts.
   - c. Space conditioning systems, including condensers and air filters.
   - d. Landscape irrigation systems.
   - e. Water reuse systems.
3. Information from local utility, water and waste recovery providers on methods to further reduce resource consumption, including recycle programs and locations.
4. Public transportation and/or carpool options available in the area.
5. Educational material on the positive impacts of an interior relative humidity between 30-60 percent and what methods an occupant may use to maintain the relative humidity level in that range.
6. Information about water-conserving landscape and irrigation design and controllers which conserve water.
7. Instructions for maintaining gutters and downspouts and the importance of diverting water at least 5 feet away from the foundation.
8. Information on required routine maintenance measures, including, but not limited to, caulking, painting, grading around the building, etc.
9. Information about state solar energy and incentive programs available.
10. A copy of all special inspections verifications required by the enforcing agency or this code.

4.410.2 RECYCLING BY OCCUPANTS. Where 5 or more multifamily dwelling units are constructed on a building site, provide readily accessible area(s) that serves all buildings on the site and are identified for the depositing, storage and collection of non-hazardous materials for recycling, including (at a minimum) paper, corrugated cardboard, glass, plastics, organic waster, and metals, or meet a lawfully enacted local recycling ordinance, if more restrictive.

Exception: Rural jurisdictions that meet and apply for the exemption in Public Resources Code Section 42649.82 (a)(2)(A) et seq. are note required to comply with the organic waste portion of this section.

DIVISION 4.5 ENVIRONMENTAL QUALITY
SECTION 4.501 GENERAL
4.501.1 Scope
The provisions of this chapter shall outline means of reducing the quality of air contaminants that are odorous, irritating and/or harmful to the comfort and well being of a building's installers, occupants and neighbors.

SECTION 4.502 DEFINITIONS
5.102.1 DEFINITIONS
The following terms are defined in Chapter 2 *(and are included here for reference)*

AGRIFIBER PRODUCTS. Agrifiber products include wheatboard, strawboard, panel substrates and door cores, not including furniture, fixtures and equipment (FF&E) not considered base building elements.

COMPOSITE WOOD PRODUCTS. Composite wood products include hardwood plywood, particleboard and medium density fiberboard. "Composite wood products" does not include hardboard, structural plywood, structural panels, structural composite lumber, oriented strand board, glued laminated timber, prefabricated wood I-joists or finger-jointed lumber, all as specified in California Code of regulations (CCR), title 17, Section 93120.1.

DIRECT-VENT APPLIANCE. A fuel-burning appliance with a sealed combustion system that draws all air for combustion from the outside atmosphere and discharges all flue gases to the outside atmosphere.

ISSUE LOG
DESIGN REVIEW SUBMITTAL
MAY 20, 2025
DR PLAN CHECK RESUBMITTAL
JUL. 15, 2025
DR PLAN CHECK RESUBMITTAL
OCT. 03, 2025

LICENSED ARCHITECT ERNIE YOUNG C-21679 REG. 4-30-26 STATE OF CALIFORNIA

Young & Borlik Architects
4962 EL CAMINO REAL, STE 218
LOS ALTOS, CALIFORNIA 94022
650-688-1950 | YBarchitects.com

NEW RESIDENCE FOR:
ERIN AND EMILY CONLEY
962 HILLCREST DRIVE
REDWOOD CITY, CA 94062

A.P.N. 058-263-040

CHECKED	DRAWN
AEY	OH, MC

DATE SEP. 23. 2024

JOB # CONLEY

A0.2.2

Copyright 2025 YOUNG AND BORLIK ARCHITECTS INC. All designs, drawings, and written materials appearing herein, are protected and constitute original and unpublished work of the Architect and may not be revised, re-used, copied, or disclosed without the written consent of the Architect. Equipment manufactured by others is excluded. Drawings and specifications are instruments of architectural service, and shall remain the the property of the Architect. Use is restricted to the site for which they are prepared.

REFERENCE SHEET # / COMPLIANCE DOCUMENTATION (NOTE# OR DETAIL#) | Y | N/A | RESPON. PARTY

MAXIMUM INCREMENTAL REACTIVITY (MIR). The maximum change in weight of ozone formed by adding a compound to the "Base Reactive Organic Gas (ROG) Mixture" per weight of compound added, expressed to hundredths of a gram (g O³/g ROC).
Note: MIR values for individual compounds and hydrocarbon solvents are specified in CCR, Title 17, Sections 94700 and 94701.

MOISTURE CONTENT. The weight of the water in wood expressed in percentage of the weight of the oven-dry wood.

PRODUCT-WEIGHTED MIR (PWMIR). The sum of all weighted-MIR for all ingredients in a product subject to this article. The PWMIR is the total product reactivity expressed to hundredths of a gram of ozone formed per gram of product (excluding container and packaging).
Note: PWMIR is calculated according to equations found in CCR, Title 17, Section 94521 (a).

REACTIVE ORGANIC COMPOUND (ROC). Any compound that has the potential, once emitted, to contribute to ozone formation in the troposphere.

VOC. A volatile organic compound (VOC) broadly defined as a chemical compound based on carbon chains or rings with vapor pressures greater than 0.1 millimeters of mercury at room temperature. These compounds typically contain hydrogen and may contain oxygen, nitrogen and other elements. See CCR Title 17, Section 94508(a).

4.503 FIREPLACES

4.503.1 GENERAL. Any installed gas fireplace shall be a direct-vent sealed-combustion type. Any installed woodstove or pellet stove shall comply with U.S. EPA New Source Performance Standards (NSPS) emission limits as applicable, and shall have a permanent label indicating they are certified to meet the emission limits. Woodstoves, pellet stoves and fireplaces shall also comply with applicable local ordinances.

4.504 POLLUTANT CONTROL

SHEET A2.3 — **4.504.1 COVERING OF DUCT OPENINGS & PROTECTION OF MECHANICAL EQUIPMENT DURING CONSTRUCTION.** At the time of rough installation, during storage on the construction site and until final startup of the heating, cooling and ventilating equipment, all duct and other related air distribution component openings shall be covered with tape, plastic, sheet metal or other methods acceptable to the enforcing agency to reduce the amount of water, dust or debris which may enter the system.

SHEET A2.3 — **4.504.2 FINISH MATERIAL POLLUTANT CONTROL.** Finish materials shall comply with this section.

SHEET A2.3 — **4.504.2.1 Adhesives, Sealants and Caulks.** Adhesives, sealant and caulks used on the project shall meet the requirements of the following standards unless more stringent local or regional air pollution or air quality management district rules apply:

1. Adhesives, adhesive bonding primers, adhesive primers, sealants, sealant primers and caulks shall comply with local or regional air pollution control or air quality management district rules where applicable or SCAQMD Rule 1168 VOC limits, as shown in Table 4.504.1 or 4.504.2, as applicable. Such products also shall comply with the Rule 1168 prohibition on the use of certain toxic compounds (chloroform, ethylene dichloride, methylene chloride, perchloroethylene and trichloroethylene), except for aerosol products, as specified in Subsection 2 below.
2. Aerosol adhesives, and smaller unit sizes of adhesives, and sealant or caulking compounds (in units of product, less packaging, which do not weigh more than 1 pound and do not consist of more than 16 fluid ounces) shall comply with statewide VOC standards and other requirements, including prohibitions on use of certain toxic compounds, of *California Code of Regulations*, Title 17, commencing with section 94507.

SHEET A2.3 — **4.504.2.2 Paints and Coatings.** Architectural paints and coatings shall comply with VOC limits in Table 1 of the ARB Architectural Suggested Control Measure, as shown in Table 4.504.3, unless more stringent local limits apply. The VOC content limit for coatings that do not meet the definitions for the specialty coatings categories listed in Table 4.504.3 shall be determined by classifying the coating as a Flat, Nonflat or Nonflat-High Gloss coating, based on its gloss, as defined in subsections 4.21, 4.36, and 4.37 of the 2007 California Air Resources Board, Suggested Control Measure, and the corresponding Flat, Nonflat or Nonflat-High Gloss VOC limit in Table 4.504.3 shall apply.

SHEET A2.3 — **4.504.2.3 Aerosol Paints and Coatings.** Aerosol paints and coatings shall meet the Product-weighted MIR Limits for ROC in Section 94522(a)(2) and other requirements, including prohibitions on use of certain toxic compounds and ozone depleting substances, in Sections 94522(e)(1) and (f)(1) of *California Code of Regulations*, Title 17, commencing with Section 94520; and in areas under the jurisdiction of the Bay Area Air Quality Management District additionally comply with the percent VOC by weight of product limits of Regulation 8, Rule 49.

SHEET A2.3 — **4.504.2.4 Verification.** Verification of compliance with this section shall be provided at the request of the enforcing agency. Documentation may include, but is not limited to, the following:

1. Manufacturer's product specification.
2. Field verification of on-site product containers.

DETAIL 3/A9.1

TABLE 4.504.1 - ADHESIVE VOC LIMIT[1,2]

(Less Water and Less Exempt Compounds in Grams per Liter)

ARCHITECTURAL APPLICATIONS	VOC LIMIT
INDOOR CARPET ADHESIVES	50
CARPET PAD ADHESIVES	50
OUTDOOR CARPET ADHESIVES	150
WOOD FLOORING ADHESIVES	100
RUBBER FLOOR ADHESIVES	60
SUBFLOOR ADHESIVES	50
CERAMIC TILE ADHESIVES	65
VCT & ASPHALT TILE ADHESIVES	50
DRYWALL & PANEL ADHESIVES	50
COVE BASE ADHESIVES	50
MULTIPURPOSE CONSTRUCTION ADHESIVE	70
STRUCTURAL GLAZING ADHESIVES	100
SINGLE-PLY ROOF MEMBRANE ADHESIVES	250
OTHER ADHESIVES NOT LISTED	50
SPECIALTY APPLICATIONS	
PVC WELDING	510
CPVC WELDING	490
ABS WELDING	325
PLASTIC CEMENT WELDING	250
ADHESIVE PRIMER FOR PLASTIC	550
CONTACT ADHESIVE	80
SPECIAL PURPOSE CONTACT ADHESIVE	250
STRUCTURAL WOOD MEMBER ADHESIVE	140
TOP & TRIM ADHESIVE	250
SUBSTRATE SPECIFIC APPLICATIONS	
METAL TO METAL	30
PLASTIC FOAMS	50
POROUS MATERIAL (EXCEPT WOOD)	50
WOOD	30
FIBERGLASS	80

1. IF AN ADHESIVE IS USED TO BOND DISSIMILAR SUBSTRATES TOGETHER, THE ADHESIVE WITH THE HIGHEST VOC CONTENT SHALL BE ALLOWED.

2. FOR ADDITIONAL INFORMATION REGARDING METHODS TO MEASURE THE VOC CONTENT SPECIFIED IN THIS TABLE, SEE SOUTH COAST AIR QUALITY MANAGEMENT DISTRICT RULE 1168.

REFERENCE SHEET # / COMPLIANCE DOCUMENTATION (NOTE# OR DETAIL#) | Y | N/A | RESPON. PARTY

DETAIL 3/A9.1

TABLE 4.504.2 - SEALANT VOC LIMIT

(Less Water and Less Exempt Compounds in Grams per Liter)

SEALANTS	VOC LIMIT
ARCHITECTURAL	250
MARINE DECK	760
NONMEMBRANE ROOF	300
ROADWAY	250
SINGLE-PLY ROOF MEMBRANE	450
OTHER	420
SEALANT PRIMERS	
ARCHITECTURAL	
NON-POROUS	250
POROUS	775
MODIFIED BITUMINOUS	500
MARINE DECK	760
OTHER	750

DETAIL 3/A9.1

TABLE 4.504.3 - VOC CONTENT LIMITS FOR ARCHITECTURAL COATINGS[1,2,3]

GRAMS OF VOC PER LITER OF COATING, LESS WATER & LESS EXEMPT COMPOUNDS

COATING CATEGORY	VOC LIMIT
FLAT COATINGS	50
NON-FLAT COATINGS	100
NONFLAT-HIGH GLOSS COATINGS	150
SPECIALTY COATINGS	
ALUMINUM ROOF COATINGS	400
BASEMENT SPECIALTY COATINGS	400
BITUMINOUS ROOF COATINGS	50
BITUMINOUS ROOF PRIMERS	350
BOND BREAKERS	350
CONCRETE CURING COMPOUNDS	350
CONCRETE/MASONRY SEALERS	100
DRIVEWAY SEALERS	50
DRY FOG COATINGS	150
FAUX FINISHING COATINGS	350
FIRE RESISTIVE COATINGS	350
FLOOR COATINGS	100
FORM-RELEASE COMPOUNDS	250
GRAPHIC ARTS COATINGS (SIGN PAINTS)	500
HIGH TEMPERATURE COATINGS	420
INDUSTRIAL MAINTENANCE COATINGS	250
LOW SOLIDS COATINGS[1]	120
MAGNESITE CEMENT COATINGS	450
MASTIC TEXTURE COATINGS	100
METALLIC PIGMENTED COATINGS	500
MULTICOLOR COATINGS	250
PRETREATMENT WASH PRIMERS	420
PRIMERS, SEALERS, & UNDERCOATERS	100
REACTIVE PENETRATING SEALERS	350
RECYCLED COATINGS	250
ROOF COATINGS	50
RUST PREVENTATIVE COATINGS	250
SHELLACS	
CLEAR	730
OPAQUE	550
SPECIALTY PRIMERS, SEALERS & UNDERCOATERS	100
STAINS	250
STONE CONSOLIDANTS	450
SWIMMING POOL COATINGS	340
TRAFFIC MARKING COATINGS	100
TUB & TILE REFINISH COATINGS	420
WATERPROOFING MEMBRANES	250
WOOD COATINGS	275
WOOD PRESERVATIVES	350
ZINC-RICH PRIMERS	340

1. GRAMS OF VOC PER LITER OF COATING, INCLUDING WATER & EXEMPT COMPOUNDS

2. THE SPECIFIED LIMITS REMAIN IN EFFECT UNLESS REVISED LIMITS ARE LISTED IN SUBSEQUENT COLUMNS IN THE TABLE.

3. VALUES IN THIS TABLE ARE DERIVED FROM THOSE SPECIFIED BY THE CALIFORNIA AIR RESOURCES BOARD, ARCHITECTURAL COATINGS SUGGESTED CONTROL MEASURE. FEB. 1, 2008. MORE INFORMATION IS AVAILABLE FROM THE AIR RESOURCES BOARD.

REFERENCE SHEET # / COMPLIANCE DOCUMENTATION (NOTE# OR DETAIL#) | Y | N/A | RESPON. PARTY

DETAIL 3/A9.1

TABLE 4.504.5 - FORMALDEHYDE LIMITS[1]

MAXIMUM FORMALDEHYDE EMISSIONS IN PARTS PER MILLION

PRODUCT	CURRENT LIMIT
HARDWOOD PLYWOOD VENEER CORE	0.05
HARDWOOD PLYWOOD COMPOSITE CORE	0.05
PARTICLE BOARD	0.09
MEDIUM DENSITY FIBERBOARD	0.11
THIN MEDIUM DENSITY FIBERBOARD[2]	0.13

1. VALUES IN THIS TABLE ARE DERIVED FROM THOSE SPECIFIED BY THE CALIF. AIR RESOURCES BOARD, AIR TOXICS CONTROL MEASURE FOR COMPOSITE WOOD AS TESTED IN ACCORDANCE WITH ASTM E 1333. FOR ADDITIONAL INFORMATION, SEE CALIF. CODE OF REGULATIONS, TITLE 17, SECTIONS 93120 THROUGH 93120.12.

2. THIN MEDIUM DENSITY FIBERBOARD HAS A MAXIMUM THICKNESS OF 5/16" (8 MM).

DIVISION 4.5 ENVIRONMENTAL QUALITY (continued)

SHEET A2.3 — **4.504.3 CARPET SYSTEMS.** All carpet installed in the building interior shall meet the testing and product requirements of at least one of the following:

1. Carpet and Rug Institute's Green Label Plus Program.
2. California Department of Public Health, "Standard Method for the Testing and Evaluation of Volatile Organic Chemical Emissions from Indoor Sources Using Environmental Chambers" Version 1.1, February 2010 (also known as Specification 01350).
3. NSF/ANSI 140 at the Gold level.
4. Scientific Certifications Systems Indoor Advantage™ Gold.

SHEET A2.3 — **4.504.3.1 Carpet cushion.** All carpet cushion installed in the building interior shall meet the requirements of the Carpet and Rug Institute's Green Label program.

SHEET A2.3 — **4.504.3.2 Carpet adhesive.** All carpet adhesive shall meet the requirements of Table 4.504.1.

SHEET A2.3 — **4.504.4 RESILIENT FLOORING SYSTEMS.** Where resilient flooring is installed , at least 80% of floor area receiving resilient flooring shall comply with one or more of the following:

1. Products compliant with the California Department of Public Health, "Standard Method for the Testing and Evaluation of Volatile Organic Chemical Emissions from Indoor Sources Using Environmental Chambers," Version 1.1, February 2010 (also known as Specification 01350), certified as a CHPS Low-Emitting Material in the Collaborative for High Performance Schools (CHPS) High Performance Products Database.
2. Products certified under UL GREENGUARD Gold (formerly the Greenguard Children & Schools program).
3. Certification under the Resilient Floor Covering Institute (RFCI) FloorScore program.
4. Meet the California Department of Public Health, "Standard Method for the Testing and Evaluation of Volatile Organic Chemical Emissions from Indoor Sources Using Environmental Chambers", Version 1.1, February 2010 (also known as Specification 01350).

SHEET A2.3 — **4.504.5 COMPOSITE WOOD PRODUCTS.** Hardwood plywood, particleboard and medium density fiberboard composite wood products used on the interior or exterior of the buildings shall meet the requirements for formaldehyde as specified in ARB's Air Toxics Control Measure for Composite Wood (17 CCR 93120 et seq.), by or before the dates specified in those sections, as shown in Table 4.504.5

SHEET A2.3 — **4.504.5.1 Documentation.** Verification of compliance with this section shall be provided as requested by the enforcing agency. Documentation shall include at least one of the following:

1. Product certifications and specifications.
2. Chain of custody certifications.
3. Product labeled and invoiced as meeting the Composite Wood Products regulation (see CCR, Title 17, Section 93120, et seq.).
4. Exterior grade products marked as meeting the PS-1 or PS-2 standards of the Engineered Wood Association, the Australian AS/NZS 2269, European 636 3S standards, and Canadian CSA 0121, CSA 0151, CSA 0153 and CSA 0325 standards.
5. Other methods acceptable to the enforcing agency.

4.505 INTERIOR MOISTURE CONTROL

4.505.1 General. Buildings shall meet or exceed the provisions of the *California Building Standards Code*.

SHEET A2.3 — **4.505.2 CONCRETE SLAB FOUNDATIONS.** Concrete slab foundations required to have a vapor retarder by California Building Code, Chapter 19, or concrete slab-on-ground floors required to have a vapor retarder by the California Residential Code, Chapter 5, shall also comply with this section.

SHEET A2.3 — **4.505.2.1 Capillary break.** A capillary break shall be installed in compliance with at least one of the following:

1. A 4-inch (101.6 mm) thick base of 1/2 inch (12.7mm) or larger clean aggregate shall be provided with a vapor barrier in direct contact with concrete and a concrete mix design, which will address bleeding, shrinkage, and curling, shall be used. For additional information, see American Concrete Institute, ACI 302.2R-06.
2. Other equivalent methods approved by the enforcing agency.
3. A slab design specified by a licensed design professional.

SHEET A2.3 — **4.505.3 MOISTURE CONTENT OF BUILDING MATERIALS.** Building materials with visible signs of water damage shall not be installed. Wall and floor framing shall not be enclosed when the framing members exceed 19 percent moisture content. Moisture content shall be verified in compliance with the following:

1. Moisture content shall be determined with either a probe-type or contact-type moisture meter.Equivalent moisture verification methods may be approved by the enforcing agency and shall satisfy requirements found in Section 101.8 of this code.
2. Moisture readings shall be taken at a point 2 feet (610 mm) to 4 feet (1219 mm) from the grade stamped end of each piece verified.
3. At least three random moisture readings shall be performed on wall and floor framing with documentation acceptable to the enforcing agency provided at the time of approval to enclose the wall and floor framing.

Insulation products which are visibly wet or have a high moisture content shall be replaced or allowed to dry prior to enclosure in wall or floor cavities. Wet-applied insulation products shall follow the manufacturers' drying recommendations prior to enclosure.

4.506 INDOOR AIR QUALITY AND EXHAUST

SHEET A2.3 — **4.506.1 Bathroom exhaust fans.** Each bathroom shall be mechanically ventilated and shall comply with the following:

1. Fans shall be ENERGY STAR compliant and be ducted to terminate outside the building.
2. Unless functioning as a component of a whole house ventilation system, fans must be controlled by a humidity control.
   a. Humidity controls shall be capable of adjustment between a relative humidity range less than or equal to 50% to a maximum of 80%. A humidity control may utilize manual or automatic means of adjustment.
   b. A humidity control may be a separate component to the exhaust fan and is not required to be integral (i.e., built-in)

Notes:

1. For the purposes of this section, a bathroom is a room which contains a bathtub, shower or tub/shower combination.
2. Lighting integral to bathroom exhaust fans shall comply with the *California Energy Code*.

SHEET A2.3 — **4.507 ENVIRONMENTAL COMFORT**
4.507.2 HEATING AND AIR-CONDITIONING SYSTEM DESIGN. Heating and air conditioning systems shall be sized, designed and have their equipment selected using the following methods:

1. The heat loss and heat gain is established according to ANSI/ACCA 2 Manual J - 2011 (Residential Load Calculation), ASHRAE handbooks or other equivalent design software or methods.
2. Duct systems are sized according to ANSI/ACCA 1 Manual D - 2014 (Residential Duct Systems), ASHRAE handbooks or other equivalent design software or methods.
3. Select heating and cooling equipment according to ANSI/ACCA 3 Manual S - 2014 (Residential Equipment Selection), or other equivalent design software or methods.

Exception: Use of alternate design temperatures necessary to ensure the system functions are acceptable.

REFERENCE SHEET # / COMPLIANCE DOCUMENTATION (NOTE# OR DETAIL#) | Y | N/A | RESPON. PARTY

SHEET A2.3

CHAPTER 7
INSTALLER & SPECIAL INSPECTOR QUALIFICATIONS

702 QUALIFICATIONS

702.1 INSTALLER TRAINING. HVAC system installers shall be trained and certified in the proper installation of HVAC systems including ducts and equipment by a nationally or regionally recognized training or certification program. Uncertified persons may perform HVAC installations when under the direct supervision and responsibility of a person trained and certified to install HVAC systems or contractor licensed to install HVAC systems. Examples of acceptable HVAC training and certification programs include but are not limited to the following:

1. State certified apprenticeship programs.
2. Public utility training programs.
3. Training programs sponsored by trade, labor or statewide energy consulting or verification organizations.
4. Programs sponsored by manufacturing organizations.
5. Other programs acceptable to the enforcing agency.

702.2 SPECIAL INSPECTION [HCD]. When required by the enforcing agency, the owner or the responsible entity acting as the owner's agent shall employ one or more special inspectors to provide inspection or other duties necessary to substantiate compliance with this code. Special inspectors shall demonstrate competence to the satisfaction of the enforcing agency for the particular type of inspection or task to be performed. In addition to other certifications or qualifications acceptable to the enforcing agency, the following certifications or education may be considered by the enforcing agency when evaluating the qualifications of a special inspector:

1. Certification by a national or regional green building program or standard publisher.
2. Certification by a statewide energy consulting or verification organization, such as HERS raters, building performance contractors, and home energy auditors.
3. Successful completion of a third party apprentice training program in the appropriate trade.
4. Other programs acceptable to the enforcing agency.

Notes:

1. Special inspectors shall be independent entities with no financial interest in the materials or the project they are inspecting for compliance with this code.
2. HERS raters are special inspectors certified by the California Energy Commission (CEC) to rate homes in California according to the Home Energy Rating System (HERS).

[BSC] When required by the enforcing agency, the owner or the responsible entity acting as the owner's agent shall employ one or more special inspectors to provide inspection or other duties necessary to substantiate compliance with this code. Special inspectors shall demonstrate competence to the satisfaction of the enforcing agency for the particular type of inspection or task to be performed. In addition, the special inspector shall have a certification from a recognized state, national or international association, as determined by the local agency. The area of certification shall be closely related to the primary job function, as determined by the local agency.

Note: Special inspectors shall be independent entities with no financial interest in the materials or the project they are inspecting for compliance with this code.

SHEET A2.3

703 VERIFICATIONS

703.1 DOCUMENTATION. Documentation used to show compliance with this code shall include but is not limited to, construction documents, plans, specifications, builder or installer certification, inspection reports, or other methods acceptable to the enforcing agency which demonstrate substantial conformance. When specific documentation or special inspection is necessary to verify compliance, that method of compliance will be specified in the appropriate section or identified applicable checklist.

ISSUE LOG
DESIGN REVIEW SUBMITTAL MAY 20, 2025
DR PLAN CHECK RESUBMITTAL JUL. 15, 2025
DR PLAN CHECK RESUBMITTAL OCT. 03, 2025

LICENSED ARCHITECT ANDREW EMILE YOUNG C-21679 REN. 4.30.26 STATE OF CALIFORNIA

Young & Borlik Architects
4962 EL CAMINO REAL, STE 218
LOS ALTOS, CALIFORNIA 94022
650-688-1950 | YBarchitects.com

NEW RESIDENCE FOR:
ERIN AND EMILY CONLEY
962 HILLCREST DRIVE
REDWOOD CITY, CA 94062

A.P.N. 058-263-040

CHECKED	DRAWN
AEY	OH, MC

DATE SEP. 23. 2024
JOB # CONLEY

A0.2.3

Copyright 2023 YOUNG AND BORLIK ARCHITECTS INC. All designs, drawings, and written materials appearing herein, are protected and constitute original and unpublished work of the Architect and may not be revised, re-used, copied, or disclosed without the written consent of the Architect. Equipment manufactured by others is excluded. Drawings and specifications are instruments of architectural service, and shall remain the the property of the Architect. Use is restricted to the site for which they are prepared.

ASSIGNMENT

Physically inspect 12 trees on the subject property based on the site survey and instructions provided by Young & Borlik Architects. Map, tag, and compile data for each tree and write an inventory/survey report documenting our observations. Provide general tree protection recommendations for use during the upcoming site development project.

SUMMARY

This survey provides a numbered map and complete and detailed information for each tree surveyed. The complete list of trees and all relevant information, including their health and structure ratings, their "protected/significant" status, and recommendations for their care can be found in the *Tree Survey Data Table* on page 19.

There are a total of 12 trees included in this report, all of which are protected under the provisions of San Mateo County Ordinance #4895. The survey indicates the following with respect to quantities:
A: Retain; condition warrants long-term preservation: **7 trees.**
B: Preservable; trees are a benefit and may be worthy of extensive effort or design accommodation: **NA**
C: May be preservable but is not worthy of extensive effort or design accommodation: **4 trees.**
D: Recommend removal due to existing health and/or structure: **1 tree.**

SURVEY METHODS

The trunks of the trees were measured using an arborist's caliper at 54 inches above mean natural grade. The canopy height and spread were estimated using visual references acquired by the use of a clinometer at various locations.

The condition of each tree was assessed by visual observation only from a standing position. This assessment did not include drilling or using sonar equipment to detect internal decay, or include climbing and/or the use of aerial equipment to assess higher portions of the tree. Consequently, it is possible that individual trees may have internal or belowground health problems or structural defects which were not identified.

All the trees surveyed were examined and then rated based on their individual health and structure according to the following *Tree Ratings Table*. Accordingly, a tree may be rated "good" under the health column for excellent/vigorous appearance and growth, and rated "fair/poor" in the structure column if structural mitigation is needed.

The health of an individual tree is rated based on leaf color and size, canopy density, new shoot growth, dead wood accumulation, and the absence or presence of pests or disease. Also considered is the arborist's own interpretation of what is "normal" for the species.

Individual tree structure is rated based on the growth pattern of the tree, including the degree of lean, the presence or absence of poor limb attachments, the length and weight of limbs, bowing or sweeping, and the extent/location of apparent decay. For each tree, a structural rating of "fair" or above indicates that the structure can be maintained with routine pruning such as removing dead branches and reducing branch end weight as the tree grows. A "fair/poor" rating indicates that the tree has significant structural weaknesses and corrective action is warranted. The notes section for that tree will then recommend a strategy/technique to improve the structure or mitigate structural issues. A "poor" structural rating indicates that the tree or portions of the tree may fail and that there are few mitigation options other than removal of the tree or large portions of the tree. Very large trees that are rated "fair/poor" for structure **and** that are near structures or in an area frequently traveled by cars or people, receive an additional **consider removal due to hazard** notation under the recommendations. This is included because structural mitigation techniques do not guarantee against structural failure, especially in very large trees. Property owners may or may not choose to remove this type of tree but should be aware that if a very large tree experiences a major structural failure, the impact may be significant.

TREE RATINGS TABLE

Rating	Health	Structure
Good	excellent/vigorous	exceptional
Fair/good	no significant health concerns	very stable
Fair	showing initial or temporary disease, pests, or lack of vitality. measures should be taken to improve health and appearance.	routine maintenance needed such as pruning or end weight reduction as tree grows
Fair/poor	in decline, significant health issues	significant structural weakness(es), mitigation needed, mitigation may or may not preserve the tree.
Poor	dead or near dead	hazard

TREE DISPOSITION CATEGORIES

Each tree onsite has been given a preservation rating relative to its existing condition. Factors such as tree health, condition, age, planting location, species, and structure are all considered to determine if a tree is suitable for preservation. Each tree in the *Tree Survey Data Table* has been assigned to one of the following categories:

A: Retain; condition warrants long-term preservation:
B: Preservable; trees are a benefit and may be worthy of extensive effort or design accommodation:
C: May be preservable but is not worthy of extensive effort or design accommodation:
D: Recommend removal due to existing health and/or structure:

If trees with poor structure or less than ideal conditions are retained, they may require further assessments, monitoring, access restrictions, maintenance, or eventual removal. More thorough conversations about impacts and specific preservation plans may be reported as the project evolves.

SAN MATEO COUNTY DEFINITION OF A PROTECTED TREE

8.400.070 - Tree Removal and Tree Pruning in Specified Bayside Design Review Districts. In the following Bayside Design Review Districts, a Protected Tree is any tree that is 6 inches in diameter (19 inches circumference) or larger when measured 4.5 feet (54 inches) above the natural grade: Emerald Lake Hills and Oak Knoll Manor (RH/DR Zoning Districts) Palomar Park (R-1/S-91/DR and R-1/S-101/DR Zoning Districts) Devonshire (R-1/S-71/DR and R-E/S-102/DR Zoning Districts) In the Districts listed above, a Protected Tree Removal Permit or an Expedited Tree Removal permit shall be required for the removal of one or more Protected Trees in accordance with this ordinance, unless one of the Exemptions in Section 8.400.100: Permit Exemptions applies. In the Districts listed above, a Protected Tree Pruning Permit shall be required for the pruning of Protected Indigenous Trees only, where the cut would result in the removal of a branch or cutting of the trunk which is 6 inches in diameter (19 inches in circumference) or greater at the point of the cut.

SURVEY AREA OBSERVATIONS AND DISCUSSION

The surveyed property is a developed .27-acre lot that slopes dramatically west to east and contains a single dwelling unit.
Only one of the eight protected trees in this survey is located on the subject property. Five are located at 980 Hillcrest Drive, and one is located at 954 Hillcrest Drive.

DSH (syn. DBH) = Diameter at Standard Height. The diameter of the trunk of a tree when measured at a point 54 inches above mean natural grade.

RISKS TO TREES BY CONSTRUCTION

Aside from any health and structure issues indicated in this report, the trees on this site could be at risk of damage by construction activities common to most projects. These activities may include the dumping or stockpiling of materials over root systems; trenching across the root zones for utilities or landscape irrigation; routing of construction traffic across root systems resulting in soil compaction and root dieback; and general grading and/or excavation activities. It is therefore essential that tree protection measures be installed per the project plans and specifications. When trenching for underground utilities or irrigation lines, it is essential that trenches be located outside the drip line wherever possible, and that the Project Arborist oversees any excavation within the drip line area. Any other grading or excavation activities near the drip line of any tree should likewise be overseen by the Project Arborist.

TREE PROTECTION MEASURES

Protective fencing must be provided during the construction period to protect heritage and/or significant trees. This fencing must protect a sufficient portion of the root zone in order to be effective. Fencing is recommended to be located 8-10 times the DSH in all directions from the tree. DSH for each tree is shown in the attached data table. The minimum recommendation for tree protection fencing location is 6 times the DSH where a larger distance is not possible. There are areas where we will amend this distance based upon tree condition and proposed construction. In our experience, the protective fencing should:

a. Consist of 12-gauge chain link fencing with a minimum height of 6 feet.
b. Be mounted on steel posts driven approximately 2 feet into the soil.
c. Fence posts should be located a maximum of 10 feet on-center.
d. Protective fencing must be installed prior to the arrival of materials, vehicles, or equipment.
e. Protective fencing must not be moved, even temporarily, and must remain in place until all construction activities are completed, unless otherwise approved by the Project Arborist.
f. Tree protection signage shall be mounted to each individual fencing location. Tree protection signage shall consist of an 8.5" x 11" laminated sheet with the words "TREE PROTECTION ZONE-DO NOT ENTER", along with the name and phone number of the Project Arborist. Signage should be readable from a distance of at least 20 feet.

Based upon the condition and location of trees present on site, the following is also recommended for any planned or future construction:

1. The Project Arborist is Kevin J. Carlson (707) 415-9709. The Project Arborist should oversee any excavation activities within the tree protection zones.

2. Any roots exposed during construction activities that are larger than 2 inches in diameter should not be cut or damaged until the Project Arborist has an opportunity to assess the impact that removing these roots could have on the trees.
3. The area under the driplines of trees should be thoroughly irrigated to a depth of 18 inches every 2 weeks during the dry months (June-October).
4. Mulch should cover all bare soil within the tree protection fencing zone. This material must be 6-8 inches in depth after spreading. Much should be spread by hand and kept at least 12 inches away from individual tree trunks. Coarse wood chips are preferred because they are organic and degrade naturally over time.
5. There must be no grading, trenching, or surface scraping inside the driplines of protected trees, unless specifically approved by the Project Arborist. For trenching, this means:
   a. Trenches for any underground utilities (gas, electric, water, phone, cable, etc.) must be located outside the driplines of protected trees, unless approved by the Project Arborist. Alternative methods of installation may be suggested.
   b. Landscape irrigation trenches must be located a minimum distance of 10 times the trunk diameter from the trunks of protected trees unless otherwise noted and approved by the Project Arborist.
6. Materials must not be stored, stockpiled, dumped, or buried inside the driplines of protected trees.
7. Excavated soil must not be piled or dumped, even temporarily, inside the driplines of protected trees.
8. Landscape materials (cobbles, decorative bark, stones, fencing, etc.) must not be installed directly in contact with the bark of trees due to risk of damage or spread of pathogens.
9. Landscape irrigation systems must be designed to avoid overspray on to the trunks of trees, especially oak trees.
10. Any pruning should be performed under the supervision of an arborist certified by the ISA (International Society of Arboriculture) and according to ISA Western Chapter/ANSI Standards (1998).
11. Any shrubs planted inside the driplines of oak trees must be species that are compatible with their environmental and cultural requirements. Shrubs compatible with California native oaks can be found in the California Oak Foundation 1991 publication *Compatible Plants Under & Around Oaks*, available online at: http://californiaoaks.org/wpcontent/uploads/2016/04/CompatiblePlantsUnderAroundOaks.pdf.

TREE SURVEY DATA

Address: 962 Hillcrest Drive, Redwood City, California
Inspection Date: April 24,2025

Ratings for health and structure are given separately for each tree according to the table below. IE, a tree may be rated "Good" under the health column For excellent, vigorous appearance and growth, while the same tree may be rated "Fair, Poor" in the structure column if structural mitigation is needed.

KEY	Health	Structure
Good	excellent, vigorous	exceptional
Fair - Good	no significant health concerns	very stable
Fair	declining; measures should be taken to improve health and appearance	routine maintenance needed
Fair - Poor	in decline: significant health issues	mitigation needed, it may or may not preserve this tree
Poor	dead or near dead	hazard

TAG NO.	COMMON NAME	DIAMETER AT STD. HEIGHT	HEIGHT	WIDTH	HEALTH	STRUCTURE	PROTECTED (X)	TREE DISPOSITION	NOTES
1	COAST LIVE OAK	13	30	25	F/G	F	X	A	ON THE PROPERTY LINE. UNBALANCED CANOPY. HEADING CUTS. DEAD WOOD
2	MONTEREY PINE	32	60	45	F/G	F	X	A	6 FEET FROM THE PROPERTY LINE. LEANING AND UNBALANCED. HEADING CUTS. DEAD WOOD.
3	ENGLISH WALNUT	9	22	13	F/P	F/G	X	D	SIGNIFICANT DECLINE
4	MONTEREY PINE	29	30	20	F/G	F	X	C	2 FEET FROM THE PROPERTY LINE. TOPPED AT 30 FEET.
5	COAST REDWOOD	20	70	30	F/G	F/G	X	A	3 FEET FROM THE PROPERTY LINE. TREEHOUSE ATTACHED TO THE LOWER TRUNK. GOOD OTHERWISE.
6	COAST REDWOOD	18	60	25	F/G	F/G	X	A	5 FEET FROM THE PROPERTY LINE. GOOD CONDITION.
7	DEODAR CEDAR	15	50	25	F/G	F/G	X	A	7 FEET FROM THE PROPERTY LINE. GOOD CONDITION.
8	PURPLE LEAF PLUM	12	25	20	F	F	X	C	NOT PROTECTED OR ESPECIALLY APPEALING. MAY BE REMOVED.
9	PAPERBARK	7	18	10	F	F	X	C	NOT PROTECTED OR ESPECIALLY APPEALING. MAY BE REMOVED.
10	PAPERBARK	11	20	8	F	F	X	C	NOT PROTECTED OR ESPECIALLY APPEALING. MAY BE REMOVED.
11	COAST LIVE OAK	12	38	40	F/G	F/G	X	A	15 FEET FROM THE PROPERTY LINE. GOOD CONDITION.
12	COAST LIVE OAK	16	35	35	F/G	F	X	A	6 FEET FROM THE PROPERTY LINE. LARGE DECAY CAVITY IN THE LOWER TRUNK. GOOD OTHERWISE.

A = Retain, condition warrants long-term preservation	7
B = Preservable, tree is a benefit and may be worthy of extensive effort or design accommodation.	0
C = May be preservable, but is not worthy of extensive effort or design accommodation.	4
D= Recommend removal due to existing condition and/or structure	1
TOTAL TREES	12
Total Protected Trees	12

KEY TO BOTANICAL NAMES
COAST LIVE OAK-QUERCUS AGRIFOLIA
MONTEREY PINE-PINUS RADIATA
ENGLISH WALNUT-JUGLANS REGIA
COAST REDWOOD-SEQUOIA SEMPERVIRENS
DEODAR CEDAR-CEDRUS DEODARA
PURPLE LEAF PLUM-PRUNUS CERASIFERA
PAPERBARK-MELALEUCA QUINQUENERVIA

KEY TO ACRONYMS
DWR - Dead Wood Removal pruning recommended.
EWR - End Weight Reduction: pruning to remove weight from limb ends, thus reducing the potential for limb failure(s).
RCE - Root Collar Excavation: excavating a small area around a tree that is currently buried by soil or refuse above buttress roots, usually done with a hand shovel.
SP - Structural pruning - removal of selected non-dominant leaders in order to balance the tree.
CD - Codominant Leader, two leaders with a narrow angle of attachement and prone to failure.
LCR-Live Crown Ratio.
RR - Recommend Tree Removal based upon Health or Structure of tree.
Prop - Steel prop in concrete footing recommended to help support a tree/limb.
Cable - Recommend a steel cable(s) be installed to help support a weakly attached limb(s).

ISSUE LOG
DESIGN REVIEW SUBMITTAL MAY 20, 2025
DR PLAN CHECK RESUBMITTAL JUL. 15, 2025
DR PLAN CHECK RESUBMITTAL OCT. 03, 2025

Young & Borlik Architects
4962 EL CAMINO REAL, STE 218
LOS ALTOS, CALIFORNIA 94022
650-688-1950 | YBarchitects.com

NEW RESIDENCE FOR:
ERIN AND EMILY CONLEY
962 HILLCREST DRIVE
REDWOOD CITY, CA 94062

A.P.N. 058-263-040
CHECKED AEY | DRAWN OH, MC
DATE SEP. 23. 2024
JOB # CONLEY

A0.3

Copyright 2025 YOUNG AND BORLIK ARCHITECTS INC. All designs, drawings, and written materials appearing herein, are protected and constitute original and unpublished work of the Architect and may not be revised, re-used, copied, or disclosed without the written consent of the Architect. Equipment manufactured by others is excluded. Drawings and specifications are instruments of architectural service, and shall remain the the property of the Architect. Use is restricted to the site for which they are prepared.

GENERAL NOTES:
SEE GEOTECHNICAL REPORT BY ROMIG ENGINEERS INC, DATED FEB. 12 2025, FOR SOILS CONDITIONS & ANALYSIS WITH RECOMMENDATIONS FOR SUBSURFACE PREPARATION, STRUCTURAL DESIGN, & DRAINAGE. ALL GRADING, EARTHWORK, FOUNDATION PREPARATION, AND DRAINAGE SUBJECT TO RECOMMENDATIONS IN THE SOILS REPORT.

SOILS ENGINEER SHALL OBSERVE AND TEST GRADING INCLUDING SUB GRADE PREPARATION TO VERIFY THAT THE CONTRACTOR MEETS THE RECOMMENDED MATERIAL QUALITY, MOISTURE CONDITIONING, AND COMPACTION REQUIREMENTS. SOIL ENGINEER SHALL OBSERVE THE FOOTING EXCAVATIONS PRIOR TO THE PLACEMENT OF REINFORCING STEEL TO CONFIRM THAT THE FOUNDATIONS ARE FOUNDED IN UNDISTURBED, FIRM NATURAL SOILS AND AT THE MINIMUM DEPTH OR DEEPER.

REFER TO THE SOILS REPORT FOR RECOMMENDATIONS FOR PERIMETER FOUNDATION DRAIN AROUND NEW STRUCTURE. SEE DETAIL 2 ON THIS SHEET, VERIFY DISCHARGE ON SITE WITH OWNER AND ARCHITECT.

MAINTAIN MIN. 5% SLOPE AWAY FROM FOUNDATION AT LANDSCAPE AREAS, MIN. 2% SLOPE AWAY AT PAVED AREAS, WITHIN 5' OF STRUCTURE.

GENERAL NOTES (CONT'D):
SEE CIVIL ENGINEERING PLANS & REPORTS BY LEA & BRAZE ENGINEERS INC. FOR ALL GRADING & DRAINAGE WORK, UTILITY CONNECTIONS & DETAILS.

TREE PROTECTION ZONES SHOULD BE ESTABLISHED AND MAINTAINED THROUGHOUT THE ENTIRE LENGTH OF THE PROJECT.

THE SITE WILL BE INSPECTED AFTER THE TREE PROTECTION MEASURES ARE INSTALLED AND BEFORE THE START OF CONSTRUCTION.

SETBACK VERIFICATION WILL BE REQUIRED BY A LICENSED SURVEYOR OR CIVIL ENGINEER TO VERIFY THE LOCATION OF STRUCTURES ON THE PROPERTY AND DOCUMENTATION SHALL BE SUBMITTED TO THE CITY BUILDING DEPARTMENT PRIOR TO FOUNDATION INSPECTION.

VERIFY SEPARATE ENCROACHMENT PERMIT APPROVALS PER CITY FOR ANY WORK WITHIN THE RIGHT OF WAY.

SEE LANDSCAPE PLANS FOR ALL FINISHED SURFACES, PLANTING LAYOUTS & SELECTIONS, AND IRRIGATION DESIGN. VERIFY ALL HARDSCAPE & SITE FINISH MATERIALS & SELECTIONS W/ OWNER PRIOR TO CONSTRUCTION.

EXISTING SITE DRAINAGE PATTERNS TO REMAIN UNCHANGED, DESIGN ON-SITE DRAINAGE TO DIRECT SURFACE FLOW AWAY FROM STRUCTURE, TO PUBLIC STREET FRONTAGE VIA GRADING, GARDEN BED & SWALES WITHOUT CROSSING ADJACENT PROPERTY LINE

GENERAL NOTES (CONT'D):
PROVIDE AT LEAST 4-INCH TALL WITH ½ INCH STROKE ILLUMINATED ADDRESS NUMBERS . ADDRESS MUST BE ILLUMINATED FROM DUSK TILL DAWN VIA PHOTOCELL OR TIMER (NO SWITCHES ALLOWED). NO SOLAR ILLUMINATION ALLOWED. THE ADDRESS SHALL BE VISIBLE FROM THE STREET AND CONTRASTING TO ITS BACKGROUND. WHERE ACCESS IS BY MEANS OF A PRIVATE ROAD AND THE BUILDING CANNOT BE VIEWED FROM THE PUBLIC WAY, A MONUMENT, POLE OR OTHER SIGN OR MEANS SHALL BE USED TO IDENTIFY THE STRUCTURE. ADDRESS NUMBERS SHALL BE MAINTAINED

ALL NEW UTILITY CONNECTIONS PER COUNTY APPROVAL

BEFORE EXCAVATION CALL U.S.A
CONTRACTOR IS RESPONSIBLE FOR LOCATION & VERIFICATION OF ALL EXISTING UNDERGROUND UTILITIES. UNDERGROUND SERVICE ALERT (USA) SHOULD BE NOTIFIED FOR ASSISTANCE IN THIS MATTER AT (800) 227-2600, 48 HOURS PRIOR TO ANY CONSTRUCTION. THE (USA) AUTHORIZATION NUMBER SHALL BE KEPT AT THE JOB SITE. LOCATION & CHARACTER OF ANY UTILITIES IF SHOWN HEREON ARE APPROXIMATE, AND TAKEN FROM A COMBINATION OF SURFACE STRUCTURE OBSERVATION AND/OR THE RECORDS OF THE CONTROLLING AGENCY. YOUNG & BORLIK ARCHITECTS DOES NOT ASSUME RESPONSIBILITY FOR THE LOCATION OF ANY EXISTING UTILITIES OR OTHER UNDERGROUND FEATURES SUCH AS VAULTS, TANKS, BASEMENTS, BURIED OBJECTS, ETC.

EXISTING STREET VIEW

LEGEND:
- (E) HOUSE FOOT PRINT PRINTED IN BLUE
- (E) FENCE IN PURPLE. VERIFY WITH NEIGHBOR FOR NEW 6' WOOD FENCE REPLACEMENT ALONG THE PROPERTY LINE WHEN APPLY
- TREE PROTECTION FENCE
- (N) HOUSE FOOT PRINT PRINTED IN PINK
- #XX TREE TO REMAIN
- 6X & 8X TREE PROTECTION ZONES DASHED
- #XX TREE TO BE REMOVED
- FIRE HYDRANT

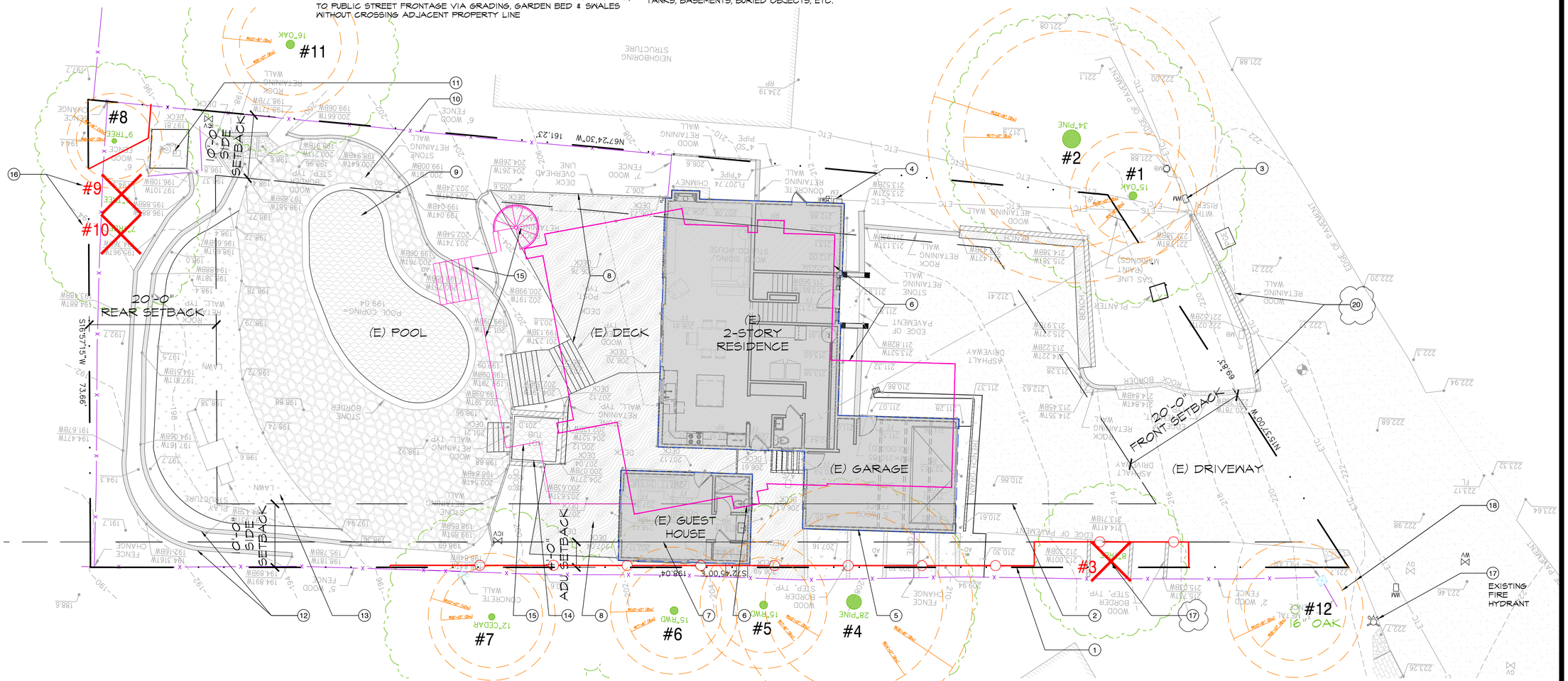

KEY NOTES:

1. SUBJECT LOT PROPERTY LINE, TYP. SEE TOPO SURVEY FOR DETAIL.

2. SITE SETBACKS, TYP.

3. (E) WATER METER AND GAS METER TO BE RELOCATED AND UPGRADED. SEE SHEET A0.5.

4. (E) ELECTRIC METER TO BE REPLACED AND RELOCATED. SEE SHEET A0.5 FOR NEW LOCATION.

5. (E) 2 STORY MAIN HOUSE TO BE COMPLETELY DEMOLISHED. SEE DEMOLITION NOTES ON SHEETS A1.1 AND A1.2.

6. OUTLINE OF (N) 2-STORY HOUSE. SEE PROPOSED FLOOR PLANS ON A2.1.1 AND A2.2.1.

7. (E) GUEST HOUSE OVER SETBACKS TO BE COMPLETELY DEMOLISHED.

8. (E) WOOD DECK TO BE DEMOLISHED.

KEY NOTES (CONT.):

9. OUTLINE OF (E) POOL TO BE DEMOLISHED & BACKFILLED PER CIVIL AND SOILS ENGINEERS. SEE SHEET A-.5 FOR (N) POOL LOCATION AND SIZE.

10. (E) STONE PATIO AND COPING TO BE DEMOLISHED

11. (E) POOL EQUIPMENT TO BE REMOVED & REPLACED WITH (N) EQUIPMENT AT SAME LOCATION.

12. (E) STACKED "ALLAN BLOCK" RETAINING WALLS TO BE REMOVED & REPLACED WITH (N) POURED IN PLACE CONCRETE WALLS ON PIERS.

13. (E) LAWN TO BE REMOVED & REPLACED WITH SYNTHETIC LAWN.

14. (E) HOT TUB TO BE REMOVED.

15. OUTLINE OF (N) WOOD DECK AND STEPS

KEY NOTES (CONT.):

16. (E) 7" & 11" PAPER BARK TREES TO BE REMOVED (SEE ARBORIST REPORT).

17. (E) FIRE HYDRANT.

18. TREE PROTECTION ZONES (ORANGE DASHED CIRCLES) 6x & 8x TRUNK DIAMETER PER ARBORIST REPORT ON SHEET A0.3.

19. (E) 8" ENGLISH WALNUT TREE TO BE REMOVED (SEE ARBORIST REPORT).

20. (E) 6X8 PTDF WOODEN CURB TOP FLUSH WITH ASPHALT & GRAVEL SWALE TO REMAIN UNCHANGED (SEE IMAGE ABOVE). VERIFY W/ PUBLIC WORKS IN FIELD. ALL WORK WITHIN THE PUBLIC RIGHT OF WAY (P.R.O.W) SHALL BE SUBMITTED UNDER SEPARATE ENCROACHMENT PERMIT TO PUBLIC WORKS DEPARTMENT FOR APPROVAL.

0' 2' 5' 10' 20'
N

EXISTING SITE PLAN

1/8" = 1'-0" | 1

ISSUE LOG
DESIGN REVIEW SUBMITTAL MAY 20, 2025
DR PLAN CHECK RESUBMITTAL JUL. 15, 2025
DR PLAN CHECK RESUBMITTAL OCT. 03, 2025

LICENSED ARCHITECT ANDREW ERNLE YOUNG C-21679 CALIFORNIA STATE OF CALIFORNIA

Young & Borlik Architects
4962 EL CAMINO REAL, STE 218
LOS ALTOS, CALIFORNIA 94022
650-688-1950 | YBarchitects.com

NEW RESIDENCE FOR:
ERIN AND EMILY CONLEY
962 HILLCREST DRIVE
REDWOOD CITY, CA 94062

A.P.N. 058-263-040

CHECKED	DRAWN
AEY	OH, MC

DATE SEP. 23. 2024

JOB # CONLEY

A0.4

Copyright 2025 YOUNG AND BORLIK ARCHITECTS INC. All designs, drawings, and written materials appearing herein, are protected and constitute original and unpublished work of the Architect and may not be revised, re-used, copied, or disclosed without the written consent of the Architect. Equipment manufactured by others is excluded. Drawings and specifications are instruments of architectural service, and shall remain the the property of the Architect. Use is restricted to the site for which they are prepared.

TREE PROTECTION NOTES:
IT IS UNLAWFUL FOR ANY PERSON TO DAMAGE OR HARM A HERITAGE TREE BY ANY MEANS WHATSOEVER, INCLUDING WITHOUT LIMITATION, VEHICLES MACHINERY OR BUILDING SUPPLIES OR MATERIAL (INCLUDING) FLUIDS) DURING ANY CONSTRUCTION OR RENOVATION OF STRUCTURES ON THE PARCEL.

TREE PROTECTION MEASURES TO BE IN PLACE PRIOR TO DEMOLITION AND THROUGHOUT CONSTRUCTION ACTIVITIES. IF NECESSARY, A CONSULTING ARBORIST SHALL BE RETAINED TO MONITOR THE CONDITION OF ANY HERITAGE TREES, AND CONDUCT ANY ROOT OR CROWN PRUNING DURING THE CONSTRUCTION PROCESS.

PROVIDE 6" LAYER OF MULCH ON GRADE OVER ROOT ZONES WITHIN TREE CANOPIES OF PROTECTED TREES.

TREE PROTECTION NOTES:
PROVIDE TEMPORARY CONSTRUCTION FENCING AS SHOWN TO PROTECT ENTIRE ROOT ZONE TO OUTSIDE OF OF THE TREE CANOPY PERIMETER. FENCE SHOULD BE IN PLACE PRIOR TO ARRIVAL OF ANY MATERIALS OR EQUIPMENT AND SHOULD REMAIN IN PLACE UNTIL ALL CONSTRUCTION IS COMPLETED AND GIVEN FINAL APPROVAL. PROTECTIVE FENCING MUST NOT BE TEMPORARILY MOVED DURING CONSTRUCTION.

NO GRADING, TRENCHING, OR SURFACE SCRAPING INSIDE THE CANOPY PERIMETER OF RETAINED TREES, UNLESS SPECIFICALLY INDICATED ON THE ENCLOSED PLANS. EXCAVATED SOIL OR EQUIPMENT MAY NOT BE STORED, TEMPORARILY OR EXTENDED, UNDER THE CANOPIES OF TREES.

ANY PRUNING MUST BE DONE BY I.S.A. CERTIFIED ARBORIST AND ACCORDING TO I.S.A. WESTERN CHAPTER STANDARDS, 1988

TREE PROTECTION NOTES (CONT'D):
TRENCHES SHALL BE OUTSIDE THE DRIP LINES OF THE TREES IN ORDER TO MINIMIZE NEGATIVE IMPACTS. ANY TRENCHING WITHIN A DISTANCE 5X THE DIAMETER OF THE TREE SHALL BE HAND EXCAVATED, AND ANY ROOTS ENCOUNTERED SHALL BE REVIEWED ON SITE BY THE PROJECT ARBORIST.

NO STORING OF MATERIALS, SOIL, VEHICLES, OR DEBRIS WITHIN THE TREE DRIP LINES SHALL BE PERMITTED DURING ANY TIME DURING DEMOLITION OR CONSTRUCTION ACTIVITIES.

LANDSCAPE MATERIALS (COBBLE, DECORATIVE BARK, STONES, FENCING, ETC.) MUST NOT BE INSTALLED DIRECTLY IN CONTACT WITH THE BARK OF TREES TO PREVENT RISK OF SERIOUS DISEASE OF INFECTION. LANDSCAPE PATHWAYS OR OTHER AMENITIES (IF ANY) CONSTRUCTED UNDER TREE CANOPIES MUST BE COMPLETELY ON GRADE WITHOUT EXCAVATION.

GENERAL NOTES:
DIRECT ROOF DOWNSPOUTS TO SPLASHBLOCKS AT GRADE. FINAL GRADING AT FINISHED SURFACES TO SLOPE AWAY FROM STRUCTURE, MIN. 5% LANDSCAPE AREAS, MIN. 2% PAVED SURFACES. DIRECT SURFACE RUN-OFF TO VEGITATED BEDS & SWALES, AND SLOPED TO DRAIN TOWARDS THE STREET OR PUBLIC FRONTAGE WITHOUT CROSSING ADJACENT PROPERTY LINES.

LEGEND:
- (E) FENCE IN PURPLE. VERIFY WITH NEIGHBOR FOR NEW 6' WOOD FENCE REPLACEMENT ALONG THE PROPERTY LINE WHEN APPLY
- TREE PROTECTION FENCE
- (N) HOUSE FOOT PRINT PRINTED IN PINK
- #XX TREE TO REMAIN
- 6X & 8X TREE PROTECTION ZONES DASHED
- FIRE HYDRANT

EXISTING STREET VIEW

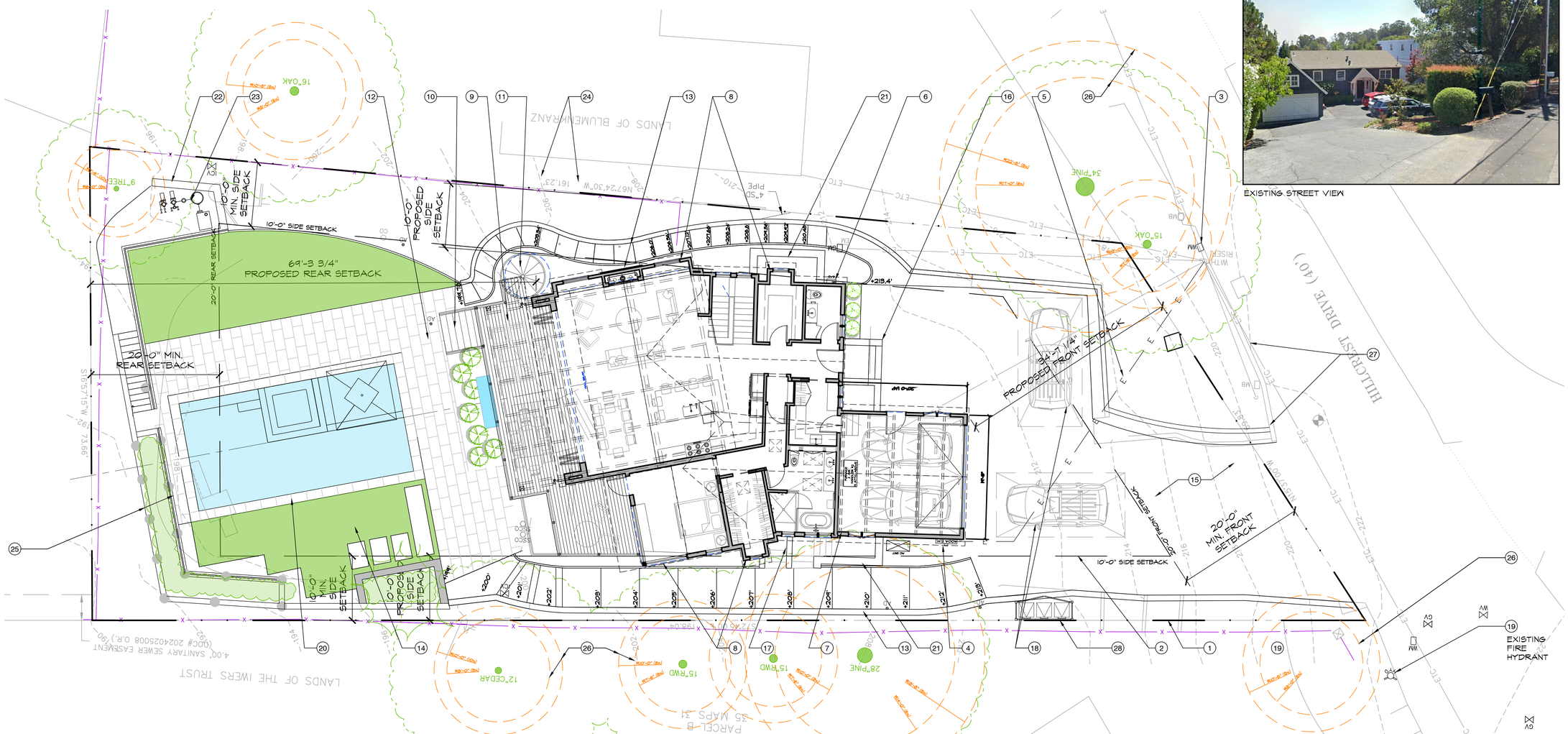

KEY NOTES:

1. SUBJECT LOT PROPERTY LINE, TYP. SEE TOPO SURVEY FOR DETAIL.

2. SITE SETBACKS, TYP.

3. UPGRADE TO NEW 1" WATER METER W/ (N) 2" MAIN CONNECTION INTO RESIDENCE. VERIFY UPGRADES BASED ON FIRE FLOW CALCS, UNDER SEPARATE DEFERRED SUBMITTAL FOR FIRE SPRINKLER SYSTEM. WORK IN THE RIGHT OF WAY FOR WATER METER UPGRADES PER SEPARATE EXCAVATION PERMIT APPROVAL THROUGH PUBLIC WORKS DIVISION.

4. (N) 400A ELECTRIC METER. VERIFY ALL REQUIREMENTS WITH P.G.&E., COUNTY OF SAN MATEO AND OWNER IN FIELD PRIOR TO WORK.

5. (N) UNDERGROUND ELECTRIC LINE TO ELECTRIC METER. VERIFY ENCROACHMENT PERMIT REQUIREMENTS AND DETAILS WITH COUNTY PUBLIC WORKS DEPARTMENT AND PG&E. SEE CIVIL DRAWINGS.

6. (N) GAS METER. VERIFY ALL REQUIREMENTS WITH P.G.&E., COUNTY OF SAN MATEO AND OWNER IN FIELD PRIOR TO WORK.

7. (N) 2 STORY HOUSE WITH ATTACHED GARAGE.

KEY NOTES (CONT.):

8. (N) BAY WINDOW PROJECTION INTO SETBACK. SEE DIMENSIONS ON SHEET A2.1.2.

9. (N) FIRE RATED WOOD DECK (BY "FIBERON" OR EQUAL - SEE SPEC SHEET A6.4) WITH 42" HIGH METAL CABLE GUARDRAIL (SEE SPEC SHEET A6.4).

10. (N) WOOD STAIRS AND 36" TALL METAL HANDRAIL TYP.

11. (N) PREFABRICATED METAL SPIRAL STAIRS.

12. (N) STONE ON CRETE POOL DECK.

13. (N) GRAVEL PATH WITH 6X8 P.T. RISERS - SEE LANDSCAPE PLANS AND DETAILS.

14. (N) SYNTHETIC LAWN AND LANDSCAPE AREA, COORDINATE TRENCHING (IRRIGATION, LIGHTING, DRAINING W/ UTILITIES & CIVIL DRAINAGE). SEE LANDSCAPE AND CIVIL PLANS.

KEY NOTES (CONT.):

15. DRIVEWAY TO REPLACE EXISTING, SEE LANDSCAPE & CIVIL PLANS REGRADE SITE FOR GENTLE SLOPE @ FRONT ENTRY.

16. (N) ENTRY STEPS AND LANDING.

17. LOCATION FOR (N) AC UNITS W/ LANDSCAPE SCREENING SET ON MIN. 5" THICK CONCRETE PAD. SHALL COMPLY WITH NOISE ORDINANCE. SEE SHEET A2.1.1 FOR UNITS LOCATION.

18. (2) 10'-0"X20'-0" GUEST PARKING SPACES ON PROPERTY.

19. (E) FIRE HYDRANT.

20. (N) POOL (UNDER SEPARATE PERMIT) WITH STONE COPING. VERIFY SELECTION WITH OWNER. SEE POOL ENGINEERING DETAILS AND SOILS REPORT BY ROMIG ENGINEERS, INC.

21. LIGHTWELL CONCRETE WALL BELOW EXTENDS INTO SETBACK THE MINIMUM AMOUNT REQUIRED FOR EGRESS. SEE DIMENSIONS ON SHEET A2.1.2.

KEY NOTES (CONT.):

22. (N) RETAINING WALL.

23. (N) POOL EQUIPMENT.

24. PLANT (N) REPLACEMENT TREES, 24" & 30" BOX TRISTANIOPSIS LAURINA - SEE LANDSCAPE PLANS SHEET L-1.

25. (N) CONCRETE LOW RETAINING WALLS ON PIERS (TO REPLACE (E) STACKED ALLEN BLOCK WALLS). SEE STRUCTURAL DETAILS

26. TREE PROTECTION ZONES (ORANGE DASHED CIRCLES) 6x & 8x TRUNK DIAMETER PER ARBORIST REPORT ON SHEET A0.3.

27. (E) 6X8 PTDF WOODEN CURB TOP FLUSH WITH ASPHALT & GRAVEL SWALE TO REMAIN UNCHANGED (SEE IMAGE ABOVE). VERIFY W/ PUBLIC WORKS IN FIELD. ALL WORK WITHIN THE PUBLIC RIGHT OF WAY (P.R.O.W) SHALL BE SUBMITTED UNDER SEPARATE ENCROACHMENT PERMIT TO PUBLIC WORKS DEPARTMENT FOR APPROVAL.

KEY NOTES (CONT.):

28. (N) TRASH ENCLOSURE WITH 54" WOODEN FENCE & GATE.

0' 2' 5' 10' 20'
N

PROPOSED SITE PLAN

1/8" = 1'-0" | 1

ISSUE LOG
DESIGN REVIEW SUBMITTAL MAY 20, 2025
DR PLAN CHECK RESUBMITTAL JUL. 15, 2025
DR PLAN CHECK RESUBMITTAL OCT. 03, 2025

LICENSED ARCHITECT ANDREW ERNLE YOUNG C-21679 REN. 4.30.26 STATE OF CALIFORNIA

Young & Borlik Architects
4962 EL CAMINO REAL, STE 218
LOS ALTOS, CALIFORNIA 94022
650-688-1950 | YBarchitects.com

NEW RESIDENCE FOR:
ERIN AND EMILY CONLEY
962 HILLCREST DRIVE
REDWOOD CITY, CA 94062

A.P.N. 058-263-040

CHECKED	DRAWN
AEY	OH, MC

DATE SEP. 23. 2024
JOB # CONLEY

A0.5

Copyright 2023 YOUNG AND BORLIK ARCHITECTS INC. All designs, drawings, and written materials appearing herein, are protected and constitute original and unpublished work of the Architect and may not be revised, re-used, copied, or disclosed without the written consent of the Architect. Equipment manufactured by others is excluded. Drawings and specifications are instruments of architectural service, and shall remain the the property of the Architect. Use is restricted to the site for which they are prepared.

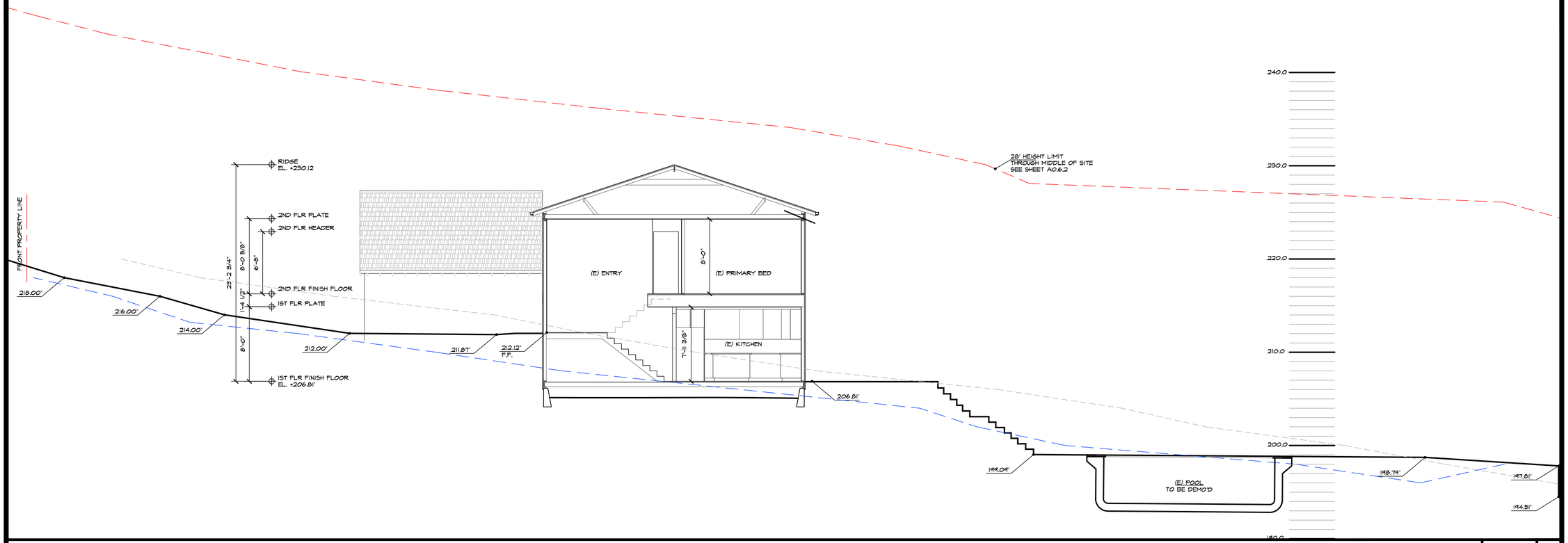

EXISTING SITE SECTION

3/16" = 1'-0" | 2

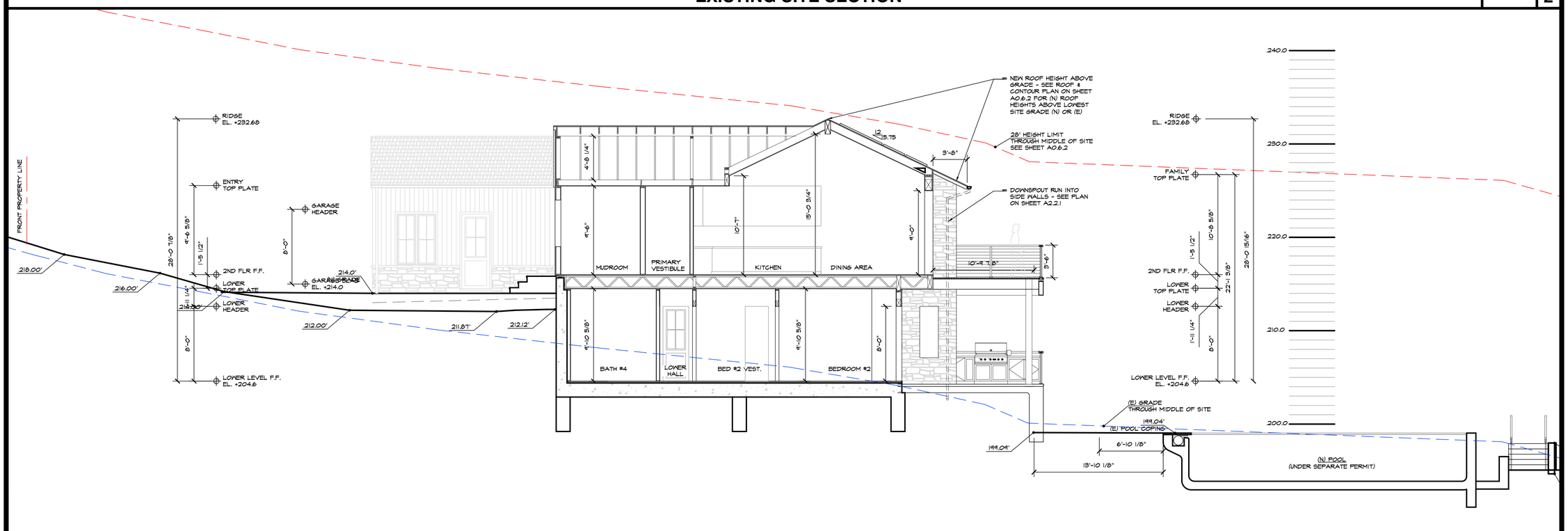

PROPOSED SITE SECTION

3/16" = 1'-0" | 1

ISSUE LOG

DESIGN REVIEW SUBMITTAL	MAY 20, 2025
DR PLAN CHECK RESUBMITTAL	JUL. 15, 2025
DR PLAN CHECK RESUBMITTAL	OCT. 03, 2025

LICENSED ARCHITECT ANDREW ERNLE YOUNG C-21679 REN. 4-30-26 STATE OF CALIFORNIA

Young & Borlik Architects
4962 EL CAMINO REAL, STE 218
LOS ALTOS, CALIFORNIA 94022
650-688-1950 | YBarchitects.com

Y&B

NEW RESIDENCE FOR:
ERIN AND EMILY CONLEY
962 HILLCREST DRIVE
REDWOOD CITY, CA 94062

A.P.N. 058-263-040

CHECKED	DRAWN
AEY	OH, MC

DATE SEP. 23. 2024

JOB # CONLEY

A0.6.1

Copyright 2023 YOUNG AND BORLIK ARCHITECTS INC. All designs, drawings, and written materials appearing herein, are protected and constitute original and unpublished work of the Architect and may not be revised, re-used, copied, or disclosed without the written consent of the Architect. Equipment manufactured by others is excluded. Drawings and specifications are instruments of architectural service, and shall remain the the property of the Architect. Use is restricted to the site for which they are prepared.

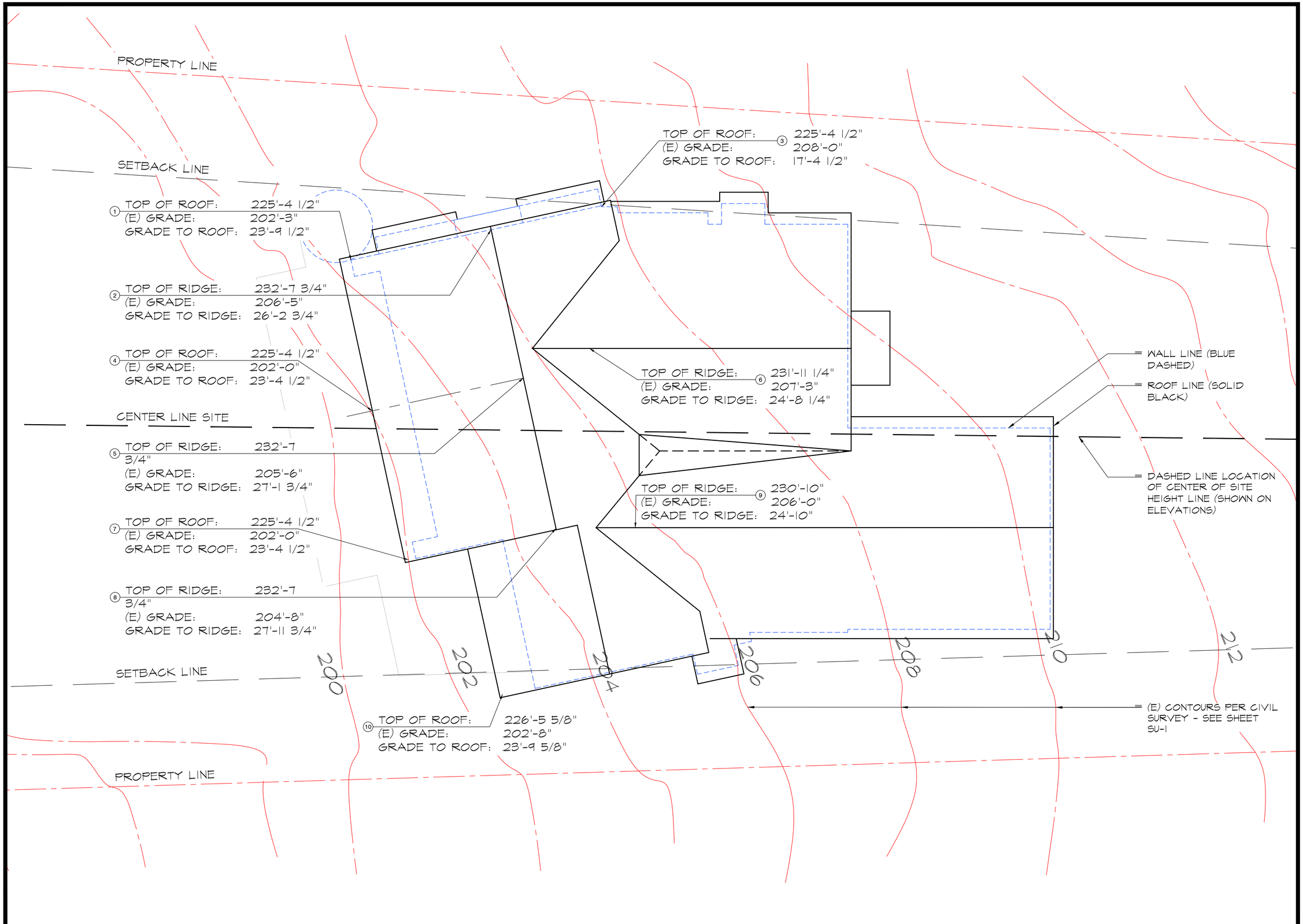

PROPOSED ROOF HEIGHT ABOVE GRADE ANALYSIS PLAN

1/4" = 1'-0" | 1

ISSUE LOG

DESIGN REVIEW SUBMITTAL	MAY 20, 2025
DR PLAN CHECK RESUBMITTAL	JUL. 15, 2025
DR PLAN CHECK RESUBMITTAL	OCT. 03, 2025

LICENSED ARCHITECT ANDREW ERNLE YOUNG C-21679 REG. 4-30-26 STATE OF CALIFORNIA

Young & Borlik Architects
4962 EL CAMINO REAL, STE 218
LOS ALTOS, CALIFORNIA 94022
650-688-1950 | YBarchitects.com

NEW RESIDENCE FOR:
ERIN AND EMILY CONLEY
962 HILLCREST DRIVE
REDWOOD CITY, CA 94062

A.P.N. 058-263-040

CHECKED	DRAWN
AEY	OH, MC

DATE SEP. 23. 2024

JOB # CONLEY

A0.6.2

Copyright 2025 YOUNG AND BORLIK ARCHITECTS INC. All designs, drawings, and written materials appearing herein, are protected and constitute original and unpublished work of the Architect and may not be revised, re-used, copied, or disclosed without the written consent of the Architect. Equipment manufactured by others is excluded. Drawings and specifications are instruments of architectural service, and shall remain the the property of the Architect. Use is restricted to the site for which they are prepared.

DECK IS OPEN TO ALLOW WATER TO PASS THROUGH, DECK BELOW DOES NOT COUNT TO FLOOR AREA

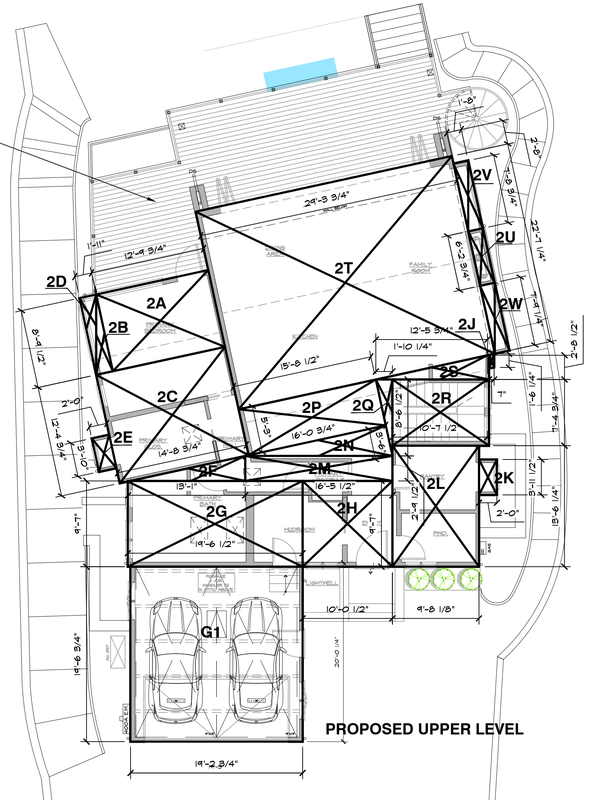

DECK ABOVE IS OPEN TO ALLOW WATER TO PASS THROUGH, DOES NOT COUNT TO FLOOR AREA

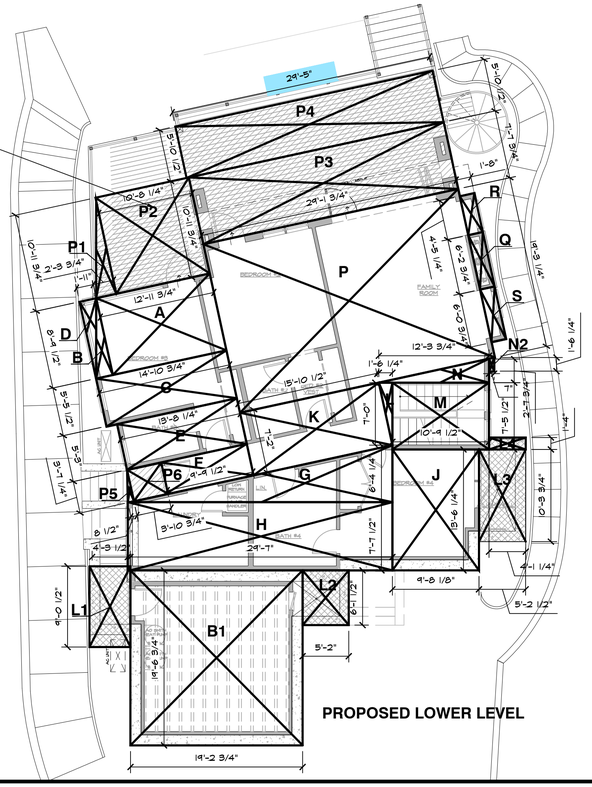

CALCULATIONS

PROPOSED BASEMENT FLOOR CALCULATIONS (CONDITIONED)

BOX	(X) DIM - FEE'	(Y) DIM - FEE1	Area (SF)	NOTES
B1	19.23	19.56	**376.2**	
PROPOSED BASEMENT FLOOR AREA (SF)			**376.2**	

PROPOSED LOWER FLOOR CALCULATIONS (CONDITIONED)

BOX	(X) DIM - FEE'	(Y) DIM - FEE1	Area (SF)	NOTES
A	12.98	8.79	**114.1**	
B	1.92	8.79	**8.4**	
C	14.90	5.46	**81.3**	
D	1.92	8.79	**8.4**	BAY WINDOW, NOT COUNTED TO FAR
E	13.69	5.25	**71.9**	
F	9.79	3.60	**35.3**	
G	29.25	6.35	**92.9**	
H	29.58	7.63	**225.6**	
J	9.68	13.52	**130.8**	
K	15.88	7.17	**113.8**	
L	1.52	7.00	**5.3**	
M	10.79	7.46	**80.5**	STAIRS NOT COUNTED TO FAR
N	12.31	2.65	**16.3**	
N2	0.58	1.52	**0.9**	
P	29.15	19.27	**561.7**	
Q	1.67	6.23	**10.4**	
R	1.67	5.19	**8.6**	BAY WINDOW, NOT COUNTED TO FAR
S	1.67	5.29	**8.8**	BAY WINDOW, NOT COUNTED TO FAR
PROPOSED LOWER FLOOR AREA (SF)			**1,468.7**	

PROPOSED LIGHTWELL CALCULATIONS

BOX	(X) DIM - FEE'	(Y) DIM - FEE1	Area (SF)	NOTES
L1	4.29	9.04	**38.8**	
L2	5.17	6.13	**31.6**	
L3	5.23	13.58	**71.0**	
L4	4.10	1.33	**5.5**	
PROPOSED LIGHTWELL AREA (SF)			**147.0**	

PROPOSED UPPER FLOOR CALCULATIONS (CONDITIONED)

BOX	(X) DIM - FEE'	(Y) DIM - FEE1	Area (SF)	NOTES
2A	12.81	8.79	**112.6**	
2B	1.92	8.79	**8.4**	
2C	14.73	12.40	**182.6**	
2D	1.92	8.79	**8.4**	BAY WINDOW, NOT COUNTED TO FAR
2E	2.00	3.83	**7.7**	BAY WINDOW, NOT COUNTED TO FAR
2F	13.08	2.79	**18.3**	
2G	19.54	9.58	**187.3**	
2H	10.04	9.58	**96.2**	
2J	0.58	1.52	**0.9**	
2K	2.00	3.96	**7.9**	BAY WINDOW, NOT COUNTED TO FAR
2L	9.68	13.52	**130.8**	
2M	16.46	2.79	**45.9**	
2N	16.06	3.50	**28.1**	
2P	15.71	5.25	**82.5**	
2Q	1.85	8.54	**7.9**	
2R	10.63	7.40	**78.6**	
2S	12.48	2.71	**16.9**	
2T	29.31	22.60	**662.6**	
2U	1.67	6.23	**10.4**	
2V	1.67	7.73	**12.9**	BAY WINDOW, NOT COUNTED TO FAR
2W	1.67	7.77	**13.0**	BAY WINDOW, NOT COUNTED TO FAR
PROPOSED UPPER FLOOR AREA (SF)			**1,670.0**	

PROPOSED GARAGE CALCULATONS (UNCONDITIONED)

BOX	(X) DIM - FEE'	(Y) DIM - FEE1	Area (SF)	NOTES
G1	19.23	19.56	**376.2**	
PROPOSED GARAGE FLOOR AREA (SF)			**376.2**	

PROPOSED COVERED PATIO CALCULATIONS

BOX	(X) DIM - FEE'	(Y) DIM - FEE1	Area (SF)	NOTES
P1	2.31	10.98	**12.7**	
P2	10.69	10.98	**117.3**	
P3	29.15	7.65	**222.8**	
P4	29.42	5.88	**172.8**	
P5	0.71	3.60	**1.3**	
P6	3.90	3.60	**14.0**	
PROPOSED COVERED PATIO AREA (SF)			**541.0**	

TOTAL PROPOSED SQUARE FOOTAGE	**3,514.9**	< 3,515.1 SF MAX (30% of lot)
TOTAL PROPOSED LOT COVERAGE (SF)	**2,587.2**	< 2,929.25 SF MAX (25% of lot)

LEGEND

- COVERED PORCH
- LIGHTWELL/BELOW GRADE PATIO

N

0' 2' 5' 10' 20'

AREA CALCULATIONS

1/8" = 1'-0"

1

ISSUE LOG

DESIGN REVIEW SUBMITTAL	MAY 20, 2025
DR PLAN CHECK RESUBMITTAL	JUL. 15, 2025
DR PLAN CHECK RESUBMITTAL	OCT. 03, 2025

LICENSED ARCHITECT ERIC YOUNG C-21679 REG. 4-30-25 STATE OF CALIFORNIA

Young & Borlik Architects
4962 EL CAMINO REAL, STE 218
LOS ALTOS, CALIFORNIA 94022
650-688-1950 | YBarchitects.com

NEW RESIDENCE FOR:
ERIN AND EMILY CONLEY
962 HILLCREST DRIVE
REDWOOD CITY, CA 94062

A.P.N. 058-263-040

CHECKED	DRAWN
AEY	OH, MC

DATE SEP. 23. 2024

JOB # CONLEY

A0.7

Copyright 2023 YOUNG AND BORLIK ARCHITECTS INC. All designs, drawings, and written materials appearing herein, are protected and constitute original and unpublished work of the Architect and may not be revised, re-used, copied, or disclosed without the written consent of the Architect. Equipment manufactured by others is excluded. Drawings and specifications are instruments of architectural service, and shall remain the the property of the Architect. Use is restricted to the site for which they are prepared.

DEMOLITION NOTES:

EXISTING ELEMENTS TO BE REMOVED OR MODIFIED SHOWN DASHED, TYPICAL. SEE ALSO PROPOSED FLOOR PLANS A2.1.1 & A2.2.1

PRIOR TO DEMOLITION, WALK THROUGH WITH OWNER AND VERIFY ANY REMOVED PLUMBING, LIGHTING, FINISHES, WINDOWS, DOORS, ETC. TO BE SAVED FOR REUSE OR RELOCATION.

VERIFY COUNTY REQ'D WASTE DIVERSION PROGRAMS FOR DEMOLITION & CONSTRUCTION DEBRIS PRIOR TO DEMOLITION.

PROVIDE DUST SCREENING AS NECESSARY TO PROTECT UNTOUCHED AREAS DURING CONSTRUCTION.

SEAL OFF DUCT OPENINGS & VENTS PRIOR TO DEMOLITION & THROUGHOUT CONSTRUCTION TO PREVENT DUST INFILTRATION.

SEE ADDITIONAL DEMOLITION & FLOOR PLAN NOTES ON GENERAL NOTES SHEET A0.2

PRIOR TO DEMOLITION, VERIFY COMPLIANCE WITH E.P.A. REQ'D PRACTICES & CERTIFICATION FOR LEAD CONTAMINATION.

THE ENVIRONMENTAL PROTECTION AGENCY (E.P.A.) REQUIRES THAT FIRMS PERFORMING RENOVATION, REPAIR, AND PAINTING PROJECTS THAT DISTURB LEAD-BASED PAINT IN PRE-1978 HOMES, CHILD CARE FACILITIES, AND SCHOOLS BE CERTIFIED BY E.P.A. AND THAT THEY USE CERTIFIED RENOVATORS WHO ARE TRAINED BY E.P.A.-APPROVED TRAINING PROVIDERS TO FOLLOW LEAD-SAFE WORK PRACTICES.

http://www.epa.gov/lead/pubs/renovation.htm

CONTRACTORS TO PROVIDE ALL WORK IN COMPLIANCE WITH REQUIRED LEAD-SAFE WORK PRACTICES, PROJECT DOCUMENTATION, AND PROFESSIONAL CERTIFICATIONS.

BEFORE EXCAVATION CALL U.S.A
OWNER AND/OR CONTRACTOR ARE RESPONSIBLE FOR LOCATION & VERIFICATION OF ALL EXISTING UNDERGROUND UTILITIES. UNDERGROUND SERVICE ALERT (USA) SHOULD BE NOTIFIED FOR ASSISTANCE IN THIS MATTER AT (800) 227-2600, 48 HOURS PRIOR TO ANY CONSTRUCTION. THE (USA) AUTHORIZATION NUMBER SHALL BE KEPT AT THE JOB SITE. LOCATION & CHARACTER OF ANY UTILITIES IF SHOWN HEREON ARE APPROXIMATE, AND TAKEN FROM A COMBINATION OF SURFACE STRUCTURE OBSERVATION AND/OR THE RECORDS OF THE CONTROLLING AGENCY. YOUNG & BORLIK ARCHITECTS DOES NOT ASSUME RESPONSIBILITY FOR THE LOCATION OF ANY EXISTING UTILITIES OR OTHER UNDERGROUND FEATURES SUCH AS VAULTS, TANKS, BASEMENTS, BURIED OBJECTS, ETC.

THE ARCHITECT HAS NOT BEEN RETAINED TO SURVEY FOR OR OTHERWISE DISCOVER THE PRESENCE OF HAZARDOUS MATERIALS INCLUDING BUT NOT LIMITED TO ASBESTOS, ASBESTOS PRODUCTS, PCB,S, OR OTHER TOXIC SUBSTANCES.

THE ARCHITECT IS NOT RESPONSIBLE FOR THE HANDLING, REMOVAL OR DISPOSAL OF OR EXPOSURE OR PERSONS TO HAZARDOUS MATERIALS IN ANY FORM AT THE PROJECT SITE. OWNER HEREBY WARRANTS THAT IF IT KNOWS OR HAS ANY REASON TO KNOW OR HAS ANY REASON TO ASSUME OR SUSPECT THAT HAZARDOUS MATERIALS EXIST AT THE PROJECT SITE, THAT IT WILL INFORM THE ARCHITECT AND THAT OWNER WILL CAUSE SUCH ITEMS TO BE REMOVED OR TREATED BY A PROFESSIONAL AND LICENSED ASBESTOS ABATEMENT CONTRACTOR IN A MANNER PRESCRIBED BY ALL APPLICABLE CODES AND REGULATIONS.

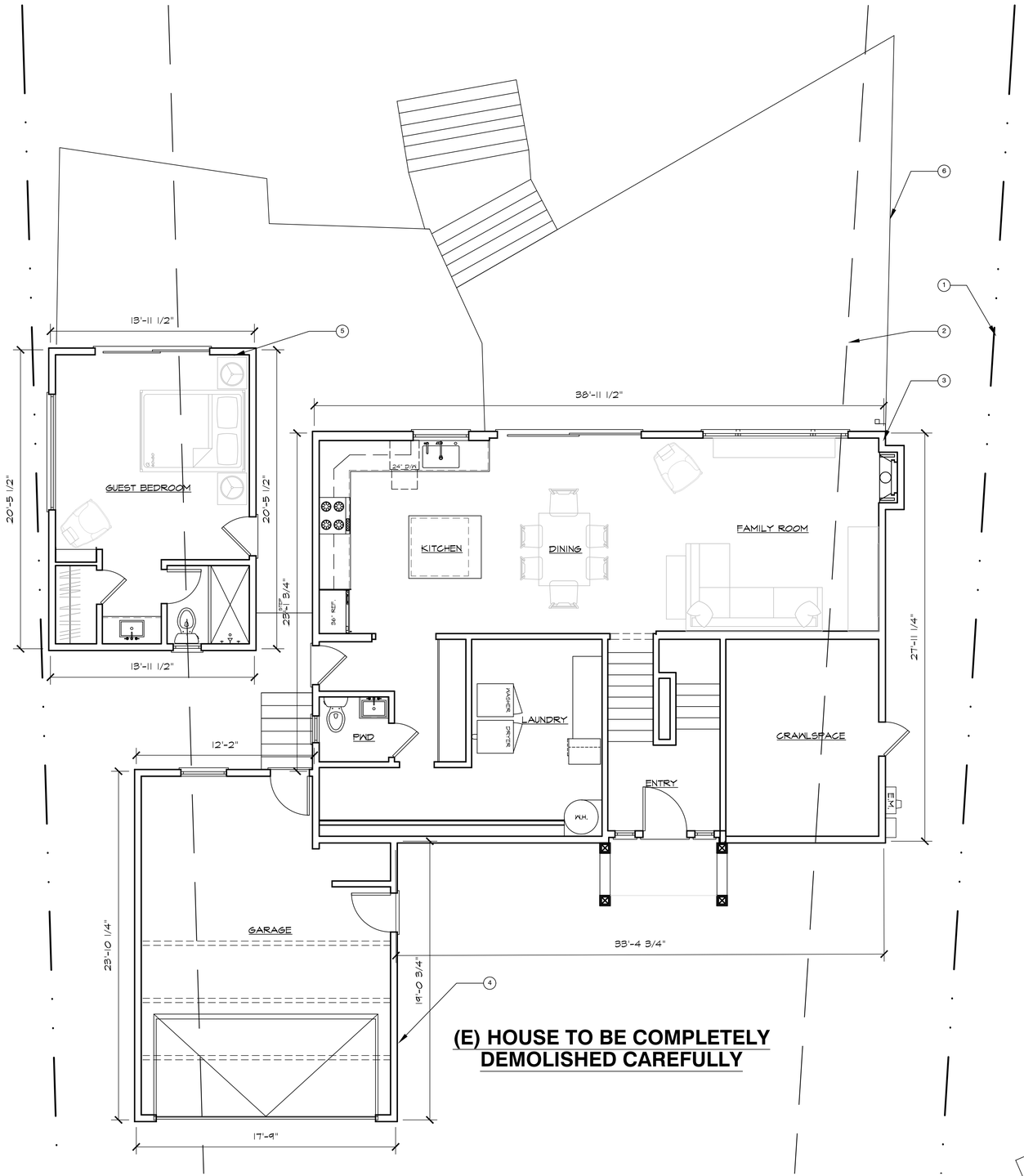

LEGEND

(-) KEY NOTES

KEY NOTES:

1. PROPERTY LINE, TYP.
2. SETBACK LINE, TYP.
3. EXISTING MAIN HOUSE TO BE COMPLETELY DEMOLISHED
4. EXISTING GARAGE TO BE COMPLETELY DEMOLISHED
5. ACCESSORY BUILDING TO BE COMPLETELY DEMOLISHED.
6. (E) WOODEN DECK GUARDRAIL & STAIRS TO GRADE TO BE COMPLETELY DEMOLISHED

PRELIMINARY- NOT YET APPROVED FOR CONSTRUCTION

0' 1' 2' 5' 10'

N

EXISTING FIRST FLOOR PLAN w/ DEMOLITION NOTES

1/4" = 1'-0" | 1

ISSUE LOG

DESIGN REVIEW SUBMITTAL MAY 20, 2025
DR PLAN CHECK RESUBMITTAL JUL. 15, 2025
DR PLAN CHECK RESUBMITTAL OCT. 03, 2025

LICENSED ARCHITECT ANDREW ERNLE YOUNG C-21679 REG. EXP. 4-30-26 STATE OF CALIFORNIA

Young & Borlik Architects
4962 EL CAMINO REAL, STE 218
LOS ALTOS, CALIFORNIA 94022
650-688-1950 | YBarchitects.com

NEW RESIDENCE FOR:
ERIN AND EMILY CONLEY
962 HILLCREST DRIVE
REDWOOD CITY, CA 94062

A.P.N. 058-263-040

CHECKED	DRAWN
AEY	OH, MC

DATE SEP. 23. 2024

JOB # CONLEY

A1.1

Copyright 2025 YOUNG AND BORLIK ARCHITECTS INC. All designs, drawings, and written materials appearing herein, are protected and constitute original and unpublished work of the Architect and may not be revised, re-used, copied, or disclosed without the written consent of the Architect. Equipment manufactured by others is excluded. Drawings and specifications are instruments of architectural service, and shall remain the the property of the Architect. Use is restricted to the site for which they are prepared.

DEMOLITION NOTES:

EXISTING ELEMENTS TO BE REMOVED OR MODIFIED SHOWN DASHED, TYPICAL. SEE ALSO PROPOSED FLOOR PLANS A2.1.1 & A2.2.1

PRIOR TO DEMOLITION, WALK THROUGH WITH OWNER AND VERIFY ANY REMOVED PLUMBING, LIGHTING, FINISHES, WINDOWS, DOORS, ETC. TO BE SAVED FOR REUSE OR RELOCATION.

VERIFY COUNTY REQ'D WASTE DIVERSION PROGRAMS FOR DEMOLITION & CONSTRUCTION DEBRIS PRIOR TO DEMOLITION.

PROVIDE DUST SCREENING AS NECESSARY TO PROTECT UNTOUCHED AREAS DURING CONSTRUCTION.

SEAL OFF DUCT OPENINGS & VENTS PRIOR TO DEMOLITION & THROUGHOUT CONSTRUCTION TO PREVENT DUST INFILTRATION.

SEE ADDITIONAL DEMOLITION & FLOOR PLAN NOTES ON GENERAL NOTES SHEET A0.2

PRIOR TO DEMOLITION, VERIFY COMPLIANCE WITH E.P.A. REQ'D PRACTICES & CERTIFICATION FOR LEAD CONTAMINATION.

THE ENVIRONMENTAL PROTECTION AGENCY (E.P.A.) REQUIRES THAT FIRMS PERFORMING RENOVATION, REPAIR, AND PAINTING PROJECTS THAT DISTURB LEAD-BASED PAINT IN PRE-1978 HOMES, CHILD CARE FACILITIES, AND SCHOOLS BE CERTIFIED BY E.P.A. AND THAT THEY USE CERTIFIED RENOVATORS WHO ARE TRAINED BY E.P.A.-APPROVED TRAINING PROVIDERS TO FOLLOW LEAD-SAFE WORK PRACTICES.

http://www.epa.gov/lead/pubs/renovation.htm

CONTRACTORS TO PROVIDE ALL WORK IN COMPLIANCE WITH REQUIRED LEAD-SAFE WORK PRACTICES, PROJECT DOCUMENTATION, AND PROFESSIONAL CERTIFICATIONS.

BEFORE EXCAVATION CALL U.S.A
OWNER AND/OR CONTRACTOR ARE RESPONSIBLE FOR LOCATION & VERIFICATION OF ALL EXISTING UNDERGROUND UTILITIES. UNDERGROUND SERVICE ALERT (USA) SHOULD BE NOTIFIED FOR ASSISTANCE IN THIS MATTER AT (800) 227-2600, 48 HOURS PRIOR TO ANY CONSTRUCTION. THE (USA) AUTHORIZATION NUMBER SHALL BE KEPT AT THE JOB SITE. LOCATION & CHARACTER OF ANY UTILITIES IF SHOWN HEREON ARE APPROXIMATE, AND TAKEN FROM A COMBINATION OF SURFACE STRUCTURE OBSERVATION AND/OR THE RECORDS OF THE CONTROLLING AGENCY. YOUNG & BORLIK ARCHITECTS DOES NOT ASSUME RESPONSIBILITY FOR THE LOCATION OF ANY EXISTING UTILITIES OR OTHER UNDERGROUND FEATURES SUCH AS VAULTS, TANKS, BASEMENTS, BURIED OBJECTS, ETC.

THE ARCHITECT HAS NOT BEEN RETAINED TO SURVEY FOR OR OTHERWISE DISCOVER THE PRESENCE OF HAZARDOUS MATERIALS INCLUDING BUT NOT LIMITED TO ASBESTOS, ASBESTOS PRODUCTS, PCB,S, OR OTHER TOXIC SUBSTANCES.

THE ARCHITECT IS NOT RESPONSIBLE FOR THE HANDLING, REMOVAL OR DISPOSAL OF OR EXPOSURE OR PERSONS TO HAZARDOUS MATERIALS IN ANY FORM AT THE PROJECT SITE. OWNER HEREBY WARRANTS THAT IF IT KNOWS OR HAS ANY REASON TO KNOW OR HAS ANY REASON TO ASSUME OR SUSPECT THAT HAZARDOUS MATERIALS EXIST AT THE PROJECT SITE, THAT IT WILL INFORM THE ARCHITECT AND THAT OWNER WILL CAUSE SUCH ITEMS TO BE REMOVED OR TREATED BY A PROFESSIONAL AND LICENSED ASBESTOS ABATEMENT CONTRACTOR IN A MANNER PRESCRIBED BY ALL APPLICABLE CODES AND REGULATIONS.

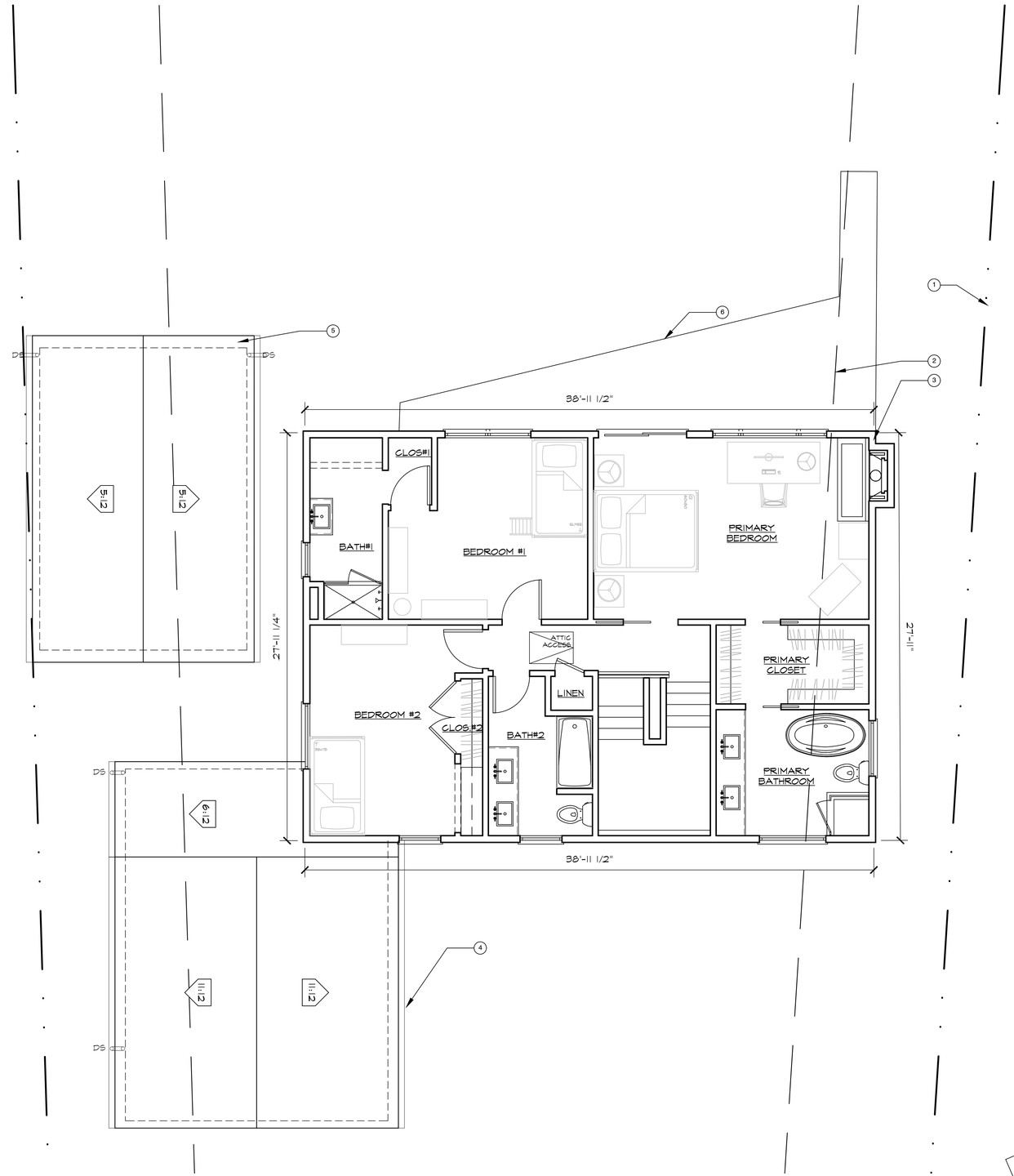

LEGEND

(·) KEY NOTES

KEY NOTES:

1. PROPERTY LINE, TYP.

2. SETBACK LINE, TYP.

3. EXSITING SECOND FLOOR TO BE COMPLETELY DEMOLISHED

4. EXISTING GARAGE ROOF TO BE COMPLETELY DEMOLISHED

5. ACCESSORY BUILDING ROOF TO BE DEMOLISHED.

6. (E) WINDOW DECK TO BE COMPLETELY DEMOLISHED/REMOVED.

PRELIMINARY-
NOT YET APPROVED
FOR CONSTRUCTION

0' 1' 2' 5' 10'

N

EXISTING SECOND FLOOR PLAN w/ DEMOLITION NOTES

1/4" = 1'-0" | 1

ISSUE LOG

DESIGN REVIEW SUBMITTAL MAY 20, 2025
DR PLAN CHECK RESUBMITTAL JUL. 15, 2025
DR PLAN CHECK RESUBMITTAL OCT. 03, 2025

LICENSED ARCHITECT ANDREW ERNLE YOUNG C-21679 STATE OF CALIFORNIA

Young & Borlik Architects
4962 EL CAMINO REAL, STE 218
LOS ALTOS, CALIFORNIA 94022
650-688-1950 | YBarchitects.com

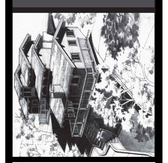

NEW RESIDENCE FOR:
ERIN AND EMILY CONLEY
962 HILLCREST DRIVE
REDWOOD CITY, CA 94062

A.P.N. 058-263-040

CHECKED	DRAWN
AEY	OH, MC

DATE SEP. 23. 2024

JOB # CONLEY

A1.2

Copyright 2025 YOUNG AND BORLIK ARCHITECTS INC. All designs, drawings, and written materials appearing herein, are protected and constitute original and unpublished work of the Architect and may not be revised, re-used, copied, or disclosed without the written consent of the Architect. Equipment manufactured by others is excluded. Drawings and specifications are instruments of architectural service, and shall remain the the property of the Architect. Use is restricted to the site for which they are prepared.

DEMOLITION NOTES:

EXISTING ELEMENTS TO BE REMOVED OR MODIFIED SHOWN DASHED, TYPICAL. SEE ALSO PROPOSED FLOOR PLANS A2.1.1 & A2.2.1

PRIOR TO DEMOLITION, WALK THROUGH WITH OWNER AND VERIFY ANY REMOVED PLUMBING, LIGHTING, FINISHES, WINDOWS, DOORS, ETC. TO BE SAVED FOR REUSE OR RELOCATION.

VERIFY COUNTY REQ'D WASTE DIVERSION PROGRAMS FOR DEMOLITION & CONSTRUCTION DEBRIS PRIOR TO DEMOLITION.

PROVIDE DUST SCREENING AS NECESSARY TO PROTECT UNTOUCHED AREAS DURING CONSTRUCTION.

SEAL OFF DUCT OPENINGS & VENTS PRIOR TO DEMOLITION & THROUGHOUT CONSTRUCTION TO PREVENT DUST INFILTRATION.

SEE ADDITIONAL DEMOLITION & FLOOR PLAN NOTES ON GENERAL NOTES SHEET A0.2

PRIOR TO DEMOLITION, VERIFY COMPLIANCE WITH E.P.A. REQ'D PRACTICES & CERTIFICATION FOR LEAD CONTAMINATION.

THE ENVIRONMENTAL PROTECTION AGENCY (E.P.A.) REQUIRES THAT FIRMS PERFORMING RENOVATION, REPAIR, AND PAINTING PROJECTS THAT DISTURB LEAD-BASED PAINT IN PRE-1978 HOMES, CHILD CARE FACILITIES, AND SCHOOLS BE CERTIFIED BY E.P.A. AND THAT THEY USE CERTIFIED RENOVATORS WHO ARE TRAINED BY E.P.A.-APPROVED TRAINING PROVIDERS TO FOLLOW LEAD-SAFE WORK PRACTICES.

http://www.epa.gov/lead/pubs/renovation.htm

CONTRACTORS TO PROVIDE ALL WORK IN COMPLIANCE WITH REQUIRED LEAD-SAFE WORK PRACTICES, PROJECT DOCUMENTATION, AND PROFESSIONAL CERTIFICATIONS.

BEFORE EXCAVATION CALL U.S.A
OWNER AND/OR CONTRACTOR ARE RESPONSIBLE FOR LOCATION & VERIFICATION OF ALL EXISTING UNDERGROUND UTILITIES. UNDERGROUND SERVICE ALERT (USA) SHOULD BE NOTIFIED FOR ASSISTANCE IN THIS MATTER AT (800) 227-2600, 48 HOURS PRIOR TO ANY CONSTRUCTION. THE (USA) AUTHORIZATION NUMBER SHALL BE KEPT AT THE JOB SITE. LOCATION & CHARACTER OF ANY UTILITIES IF SHOWN HEREON ARE APPROXIMATE, AND TAKEN FROM A COMBINATION OF SURFACE STRUCTURE OBSERVATION AND/OR THE RECORDS OF THE CONTROLLING AGENCY. YOUNG & BORLIK ARCHITECTS DOES NOT ASSUME RESPONSIBILITY FOR THE LOCATION OF ANY EXISTING UTILITIES OR OTHER UNDERGROUND FEATURES SUCH AS VAULTS, TANKS, BASEMENTS, BURIED OBJECTS, ETC.

THE ARCHITECT HAS NOT BEEN RETAINED TO SURVEY FOR OR OTHERWISE DISCOVER THE PRESENCE OF HAZARDOUS MATERIALS INCLUDING BUT NOT LIMITED TO ASBESTOS, ASBESTOS PRODUCTS, PCB,S, OR OTHER TOXIC SUBSTANCES.

THE ARCHITECT IS NOT RESPONSIBLE FOR THE HANDLING, REMOVAL OR DISPOSAL OF OR EXPOSURE OR PERSONS TO HAZARDOUS MATERIALS IN ANY FORM AT THE PROJECT SITE. OWNER HEREBY WARRANTS THAT IF IT KNOWS OR HAS ANY REASON TO KNOW OR HAS ANY REASON TO ASSUME OR SUSPECT THAT HAZARDOUS MATERIALS EXIST AT THE PROJECT SITE, THAT IT WILL INFORM THE ARCHITECT AND THAT OWNER WILL CAUSE SUCH ITEMS TO BE REMOVED OR TREATED BY A PROFESSIONAL AND LICENSED ASBESTOS ABATEMENT CONTRACTOR IN A MANNER PRESCRIBED BY ALL APPLICABLE CODES AND REGULATIONS.

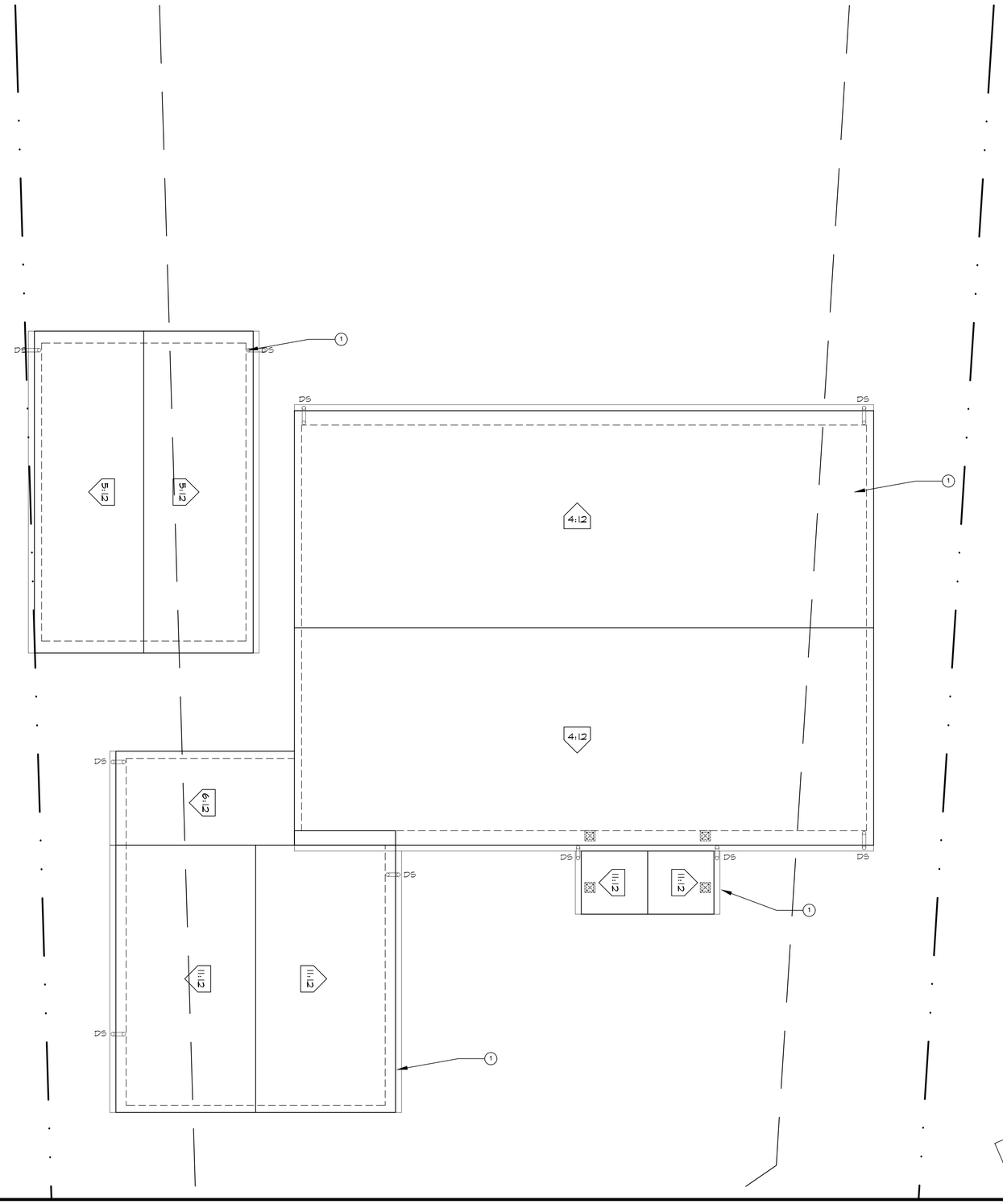

KEY NOTES:

1. ALL ROOFS, GUTTERS, AND DOWNSPOUTS TO BE COMPLETELY DEMOLISHED

PRELIMINARY-
NOT YET APPROVED
FOR CONSTRUCTION

0' 1' 2' 5' 10'

N

EXISTING ROOF PLAN w/ DEMOLITION NOTES

1/4" = 1'-0" | 1

ISSUE LOG

DESIGN REVIEW SUBMITTAL	MAY 20, 2025
DR PLAN CHECK RESUBMITTAL	JUL. 15, 2025
DR PLAN CHECK RESUBMITTAL	OCT. 03, 2025

LICENSED ARCHITECT ANDREW ERNLE YOUNG C-21679 REN. 4-30-26 STATE OF CALIFORNIA

Young & Borlik Architects
4962 EL CAMINO REAL, STE 218
LOS ALTOS, CALIFORNIA 94022
650-688-1950 | YBarchitects.com

NEW RESIDENCE FOR:
ERIN AND EMILY CONLEY
962 HILLCREST DRIVE
REDWOOD CITY, CA 94062

A.P.N. 058-263-040

CHECKED	DRAWN
AEY	OH, MC

DATE SEP. 23. 2024

JOB # CONLEY

A1.3

Copyright 2025 YOUNG AND BORLIK ARCHITECTS INC. All designs, drawings, and written materials appearing herein, are protected and constitute original and unpublished work of the Architect and may not be revised, re-used, copied, or disclosed without the written consent of the Architect. Equipment manufactured by others is excluded. Drawings and specifications are instruments of architectural service, and shall remain the the property of the Architect. Use is restricted to the site for which they are prepared.

GENERAL NOTES:
VERIFY ALL HARDSCAPE, DRIVEWAY,AND LANDSCAPE LAYOUTS AND FINISHES WITH OWNER.

EXTERIOR WALLS - STONE OR STUCCO CEMENT PLASTER (3-COAT APPLICATION W/ CONTINUOUS G.I. WEEP SCREED AT MUDSILL), OVER METAL LATHE, OVER 2-LAYERS GRADE "D" BLDG. PAPER (OR EQUIVALENT HOME WRAP MEMBRANE) OVER EXTERIOR SHEAR PLYWD., OVER 2X FRAMING @ 16"O.C. U.N.O. SEE STRUCTURAL PLANS FOR SHEAR WALL & HOLDDOWN LOCATIONS & NAILING. SEE EXTERIOR ELEVATIONS FOR LOCATIONS OF EACH MATERIAL.

INTERIOR WALLS - 1/2" OR 5/8" GYP. BD. ON 2X4 STUDS @ 16"O.C. U.N.O. SEE STRUCTURAL PLANS FOR SHEAR WALL & HOLDDOWN LOCATIONS & NAILING. (2X6 MIN. @ PLUMBING WALLS). 5/8" TYPE 'X' GYPSUM BOARD @ ALL SEPARATION WALLS & CEILING IN GARAGE AND AT ENCLOSED SPACE UNDER STAIRS. LEVEL/PLUMB CEILINGS AT KITCHENS AND OTHER AREAS WITH FULL HEIGHT CABINETRY. VERIFY WITH OWNER OPTIONS & EXTENT FOR ACOUSTICAL BATTS INSULATION AT INTERIOR WALLS OR FLOORS.

SEE STRUCTURAL PLANS FOR SHEAR WALL AND HOLDDOWN LOCATIONS. SEE BUILDING SECTIONS FOR TYPICAL WALL INSULATION LOCATIONS & R-VALUES.

ALL NEW WINDOWS TO BE DOUBLE PANE ALUMINUM CLAD WOOD WINDOW WITH NEAT, LOW IRON GLASS. SEE SHEET A9.1 FOR WINDOW/DOOR SCHEDULE, ELEVATION SHEETS FOR GRIDS PATTERN. PROVIDE TEMPERED GLAZING AT WINDOWS AT SHOWERS, ABOVE BATHTUBS AND IN THE STAIR WELL.

VERIFY FINISH SELECTIONS, BASEBOARD, CEILING TRIM, AND DOOR & WINDOW CASINGS W/ OWNER AND ARCHITECT IN FIELD. PROVIDE BLOCKING AS NECESSARY FOR BATHROOM AND OTHER ACCESSORIES, WINDOW TREATMENTS, ETC.

VERIFY ALL FLOOR FINISH SELECTIONS w/ OWNER PRIOR CONSTRUCTION. CONTRACTOR AND FLOOR SUBCONTRACTORS TO DETERMINE FINISH HEIGHTS OF SLABS FOR DIFFERENT FLOOR FINISHES PRIOR TO CONCRETE FORMING.

MECHANICAL/ELECTRICAL/PLUMBING - FRAMING CONTRACTOR SHALL CAREFULLY REVIEW ALL ELECTRICAL, MECHANICAL, & STRUCTURAL PLANS AND CONSIDER ALL ISSUES IN LOCATION OF SIGNIFICANT BEAMS AND LAYOUT OF FLOOR & CEILING JOISTS TO ACCOMMODATE LIGHT CANS, PLUMBING, MINIMIZE HEADING OFF, CENTER FLOOR REGISTERS W/ DOORS, ALIGN CHUTES & CHASES, ETC. VERIFY ALL PLUMBING FIXTURES, APPLIANCES, LIGHTING SELECTIONS, DIMENSIONS, & REQUIREMENTS ETC. W/ OWNER PRIOR TO ROUGH FRAMING. SEE MEP AND LS PLANS FOR LIGHTS, SWITCHES, OUTLETS, TV, PHONE LOCATIONS, ETC. VERIFY W/ ELECTRICIAN, OWNER DURING FRAMING. COORDINATE ALIGNMENT W/ TILE FINISHES, HEIGHTS, WALL DEPTHS & FINISH, BLOCKING, ETC. MECHANICAL CONTRACTOR TO VERIFY ALL AIR DUCTS, CHASES, LOCATIONS, CONFIGURATIONS, ETC. W/ FRAMING CONTRACTOR DURING FOUNDATION WORK, PRIOR TO FRAMING.

REFER TO SHEET A0.2.1, A0.2.2, AND A2.3 FOR CALGREEN MANDATORY CHECKLIST AND NOTES.

BATHROOM NOTES:
BN-1. (N) BATH CABINETS w/ GRANITE COUNTERTOPS, HANSGROHE, TOTO, KOHLER or EQUAL PLUMBING FIXTURES, TILE OR STONE FLOORING. VERIFY ALL SELECTIONS, FINISHES, ACCESSORIES, ETC. WITH OWNER. VERIFY ALL ROUGH PLUMBING REQUIREMENTS/ DIMENSIONS PRIOR TO CONCRETE AND FRAMING.

BN-2. SHOWERS OR TUB/SHOWER COMBINATIONS SHALL BE PROVIDED WITH INDIVIDUAL CONTROL VALVES OF THE THERMOSTATIC MIXING OR PRESSURE BALANCE TYPE ADJUSTED TO 120 DEGREES MAXIMUM.

BN-3. AT ALL SHOWERS AND TUB/SHOWER COMBINATIONS, A SMOOTH, HARD, NONABSORBENT SURFACE (e.g., CERAMIC TILE OR FIBERGLASS) OVER A MOISTURE RESISTANT UNDERLAYMENT (e.g., CEMENT, FIBER CEMENT, OR GLASS MAT GYPSUM BACKER) TO A HEIGHT OF 72" ABOVE THE DRAIN INLET. CRC R307.2. MATERIALS OTHER THAN STRUCTURAL ELEMENTS SHALL BE MOISTURE RESISTANT. WATER RESISTANT GYPSUM BACKING BOARD (i.e. GREEN BOARD) SHALL NOT BE USED IN BATH TUBS OR SHOWERS WHERE THERE WILL BE DIRECT EXPOSURE TO WATER. PROVIDE BACKERS SUCH AS WONDER-BOARD, HARDI-BACKER OR EQUIVALENT. VERIFY FINISH MATERIALS W/OWNER.

BN-4. WHERE SHOWER IS PROPOSED, INSTALL HOT-MOP SHOWER PAN @ ALL SHOWERS (TYPICAL). BASE MATERIAL BENEATH SHOWER PAN TO SLOPE TO DRAIN. VERIFY DRAIN LOCATION W/OWNER.

BN-5. TEMPERED GLASS FRAMELESS SHOWER ENCLOSURE. MIN. 3/8" THICK GLASS, AND 22" WIDE DOOR SWING OUT.

BN-6. ALL SHOWER COMPARTMENTS, REGARDLESS OF SHAPE, SHALL HAVE A MINIMUM FINISHED INTERIOR OF 1,024 SQUARE INCHES, AND SHALL ALSO BE CAPABLE OF ENCOMPASSING A 30-INCH CIRCLE, PER CPC 408.6.

BN-7. NO WATER CLOSET OR BIDET SHALL BE SET CLOSER THAN 15" FROM ITS CENTER TO ANY SIDE WALL OR OBSTRUCTION NOR CLOSER THAN 30" CENTER TO CENTER TO ANY SIMILAR FIXTURE. THE CLEAR SPACE IN FRONT OF ANY WATER CLOSET OR BIDET SHALL NOT BE LESS THAN 24".

BN-8. INSTALL BATHROOM ACCESSORIES, I.E. MIRRORS, MEDICINE CABINETS, TOWEL BARS & HOOKS, TOILET PAPER HOLDERS, SOAP DISHES, ETC., SELECTED BY OWNER. VERIFY SIZES AND MOUNTING LOCATIONS, PROVIDE PROPER BLOCKING.

BN-9. INSTALL EXHAUST FAN TO PROVIDE MINIMUM 5 AIR EXCHANGE PER HOUR VENTED TO EXTERIOR WITH A BACK DRAFT DAMPER.

BN-10. REFER TO "INDOOR AIR QUALITY" ON MP SHEETS FOR REQUIRED SINGLE FAN EXHAUST SYSTEM MIN. DUCT SIZE.

BN-11. BATHTUB AND SHOWER FLOORS AND WALLS ABOVE BATHTUBS WITH INSTALLED SHOWER HEADS AND IN SHOWER COMPARTMENTS SHALL BE FINISHED WITH A NONABSORBENT SURFACE. SUCH WALL SURFACES SHALL EXTEND TO A HEIGHT OF NOT LESS THAN 6 FEET ABOVE THE FLOOR. CRC R307.2

BN-12. GYPSUM BOARD SHALL NOT BE USED WHERE THERE WILL BE DIRECT EXPOSURE TO WATER, OR IN AREAS SUBJECT TO CONTINUOUS HIGH HUMIDITY. CRC R702.3.7.

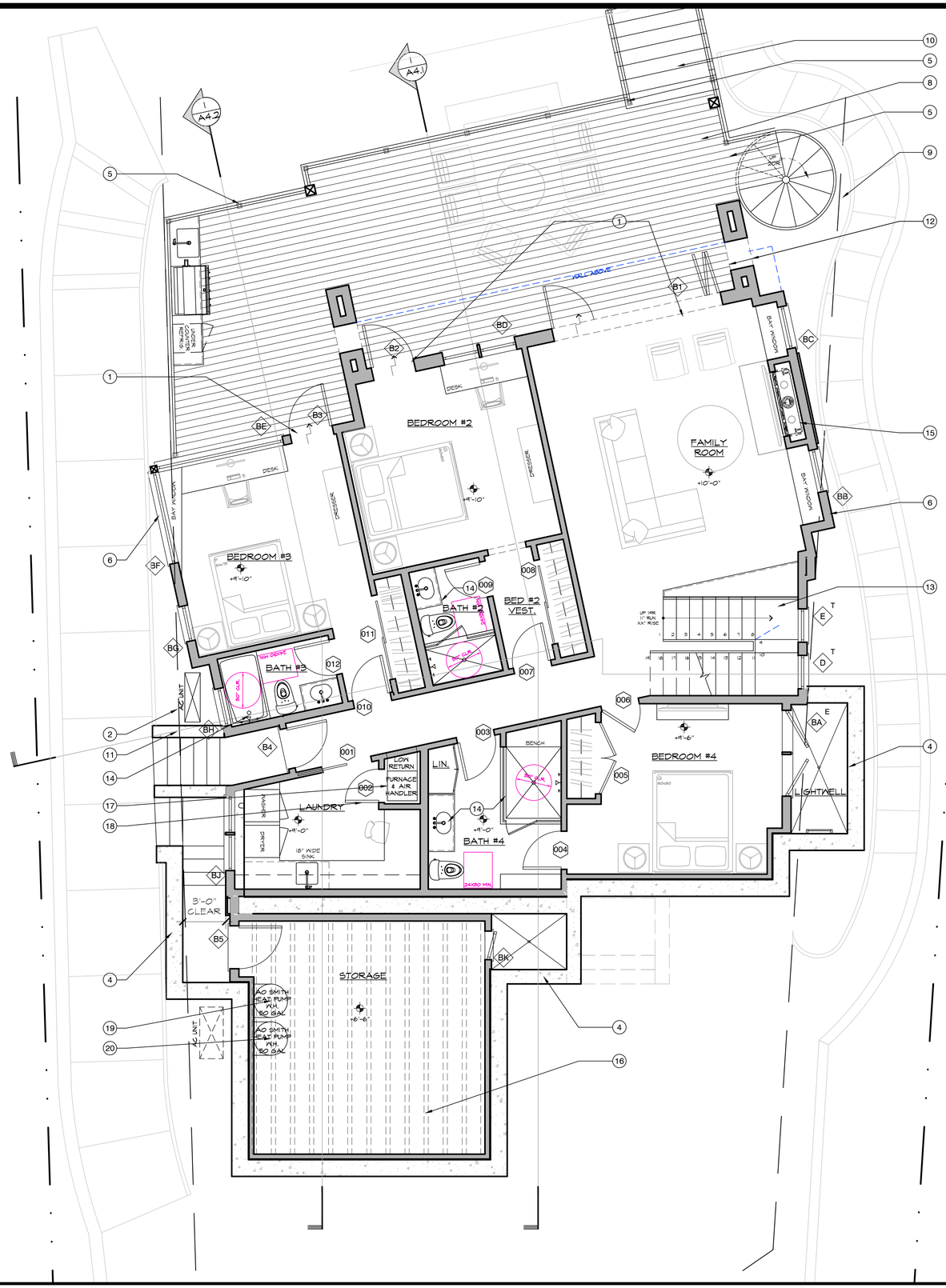

KEYNOTES

1. THERE SHALL BE A LANDING OR FLOOR ON EACH SIDE OF EACH EXTERIOR DOOR. THE WIDTH OF EACH LANDING SHALL NOT BE LESS THAN THE DOOR SERVED. EVERY LANDING SHALL HAVE A MINIMUM DIMENSION OF 36" MEASURED IN THE DIRECTION OF TRAVEL, WITH A MAXIMUM 1/4" PER FOOT SLOPE. LANDING OR FLOORS AT THE REQUIRED EGRESS DOOR SHALL NOT BE MORE THAN 1-1/2" LOWER THAN THE TOP OF THE THRESHOLD. EXCEPT, WHEN PROVIDING THE DOOR DOES NOT NOT SWING OVER THE LANDING OR FLOOR, A 7-3/4" ELEVATION CHANGE FROM THE TOP OF THE THRESHOLD IS PERMITTED. R311.3. THERE SHALL BE 1/4" SLOPE AWAY FROM THE BUILDING AT ALL PORCHES AND FLATWORK.

2. NEW A/C CONDENSER UNIT FOR LOWER LEVEL ON CONCRETE SLAB.

3. CONCRETE RETAINING WALL. SEE STRUCTURAL DRAWINGS.

4. LIGHTWELL TYP. AREA DRAIN IN CENTER OF LIGHTWELL CONCRETE FLOOR TO CONNECT TO SUBDRAIN SYSTEM. SEE GRADING AND DRAINAGE PLANS.

5. 42" HIGH METAL POSTS WITH CABLE GUARD RAIL TYP. SEE DETAIL ON SHEET 1/A6.4 VERIFY SELECTION W/ OWNER.

6. BAY WINDOW PROJECTION OVER MINIMUM SETBACK. SEE DIMENSION PLAN SHEET A2.1.2 FOR DIMENSIONS OF PROJECTION.

7. ALL FLATWORK TO SLOPE 1/4" PER 1'-0" TO DRAIN. VERIFY WITH CONTRACTOR IN FIELD.

8. ENGINEERED FIRE RATED 2X6 DECK SLOPED 1/4" PER 1'-0" TOWARDS REAR PROPERTY LINE. VERIFY FINISH WITH OWNER.

9. CUSTOM METAL SPIRAL STAIR. CONTRACTOR TO VERIFY DIMENSIONS AND PROVIDE ARCHITECT SHOP DRAWINGS TO REVIEW PRIOR TO ORDER.

10. FIRE RATED 2X6 DECK STEPS HANDRAILS TO GRADE BELOW. SEE STAIR NOTES ON THIS SHEET.

11. DASHED LINE IN BLUE INDICATES EDGE OF UPPER FLOOR ABOVE.

12. OPENINGS IN STONE "WING WALLS". SEE ELEVATIONS.

13. INTERIOR STAIRCASE. SEE STAIR NOTES ON SHEET A2.2.1.

14. SEE BATHROOM NOTES ON THIS SHEET.

15. DIRECT VENT OR POWER VENT GAS FIREPLACE. VERIFY SELECTIONS WITH OWNERS, INTERIOR DESIGNER, & ARCHITECT. CONTRACTOR SHALL PROVIDE SELECTED FIREPLACE MODEL NUMBERS TO BUILDING INSPECTOR FOR APPROVAL PRIOR TO PURCHASE AND INSTALLATION. ALL FACTORY BUILT FIREPLACES SHALL BE LISTED AND LABELED AND SHALL BE INSTALLED IN ACCORDANCE WITH ITS LISTING AND MANUFACTURER'S INSTALLATION INSTRUCTIONS. FACTORY BUILT FIREPLACES SHALL BE TESTED IN ACCORDANCE WITH UL 127. ALL INTERIOR FIREPLACES SHALL BE DIRECT-VENT, SEALED-COMBUSTION TYPE GAS FIREPLACE PER CGBC 4.503. VERIFY VENTING WITH STRUCTURAL ENGINEER AND ARCHITECT IN FIELD.

16. STORAGE ROOM WITH MAXIMUM 6'-6" CEILING HEIGHT (DOES NOT COUNT TO FLOOR AREA. PROVIDE FAN FOR VENTILATION.

17. GAS POWERED FURNACE FOR LOWER LEVEL.

18. LOUVERED DOOR TO PROVIDE MIN 100 CFM MAKE UP AIR, SEE DOOR AND WINDOW SCHEDULE SHEET A9.1

19. GAS POWERED 50 GALLON TANK WATER HEATER FOR LOWER LEVEL. SEE SPECIFICATION ON 4/A6.2.

20. GAS POWERED 50 GALLON TANK WATER HEATER FOR UPPER LEVEL. SEE SPECIFICATION ON 4/A6.2.

21. PROPOSED LOCATION FOR CONTROLS FOR SMART LIGHTING SYSTEM. SEE LIGHTING PLANS ON SHEET LS2.1 AND LS2.2

KEY TO SYMBOLS:

PROPOSED WALL

(11) FLOOR PLAN KEY NOTES

(A) E/T WINDOW UNIT SYMBOL, SEE SHEET A9.1 "E" FOR EGRESS "T" FOR TEMPERED

(1) DOOR UNIT SYMBOL, SEE SHEET A9.1

PRELIMINARY-
NOT YET APPROVED
FOR CONSTRUCTION

0' 1' 2' 5' 10'

PROPOSED LOWER LEVEL FLOOR PLAN

1/4" = 1'-0" | 1

ISSUE LOG
DESIGN REVIEW SUBMITTAL MAY 20, 2025
DR PLAN CHECK RESUBMITTAL JUL. 15, 2025
DR PLAN CHECK RESUBMITTAL OCT. 03, 2025

LICENSED ARCHITECT ERIC YOUNG C-21679 STATE OF CALIFORNIA

Young & Borlik Architects
4962 EL CAMINO REAL, STE 218
LOS ALTOS, CALIFORNIA 94022
650-688-1950 | YBarchitects.com

NEW RESIDENCE FOR:
ERIN AND EMILY CONLEY
962 HILLCREST DRIVE
REDWOOD CITY, CA 94062

A.P.N. 058-263-040

CHECKED	DRAWN
AEY	OH, MC

DATE SEP. 23. 2024

JOB # CONLEY

A2.1.1

Copyright 2025 YOUNG AND BORLIK ARCHITECTS INC. All designs, drawings, and written materials appearing herein, are protected and constitute original and unpublished work of the Architect and may not be revised, re-used, copied, or disclosed without the written consent of the Architect. Equipment manufactured by others is excluded. Drawings and specifications are instruments of architectural service, and shall remain the the property of the Architect. Use is restricted to the site for which they are prepared.

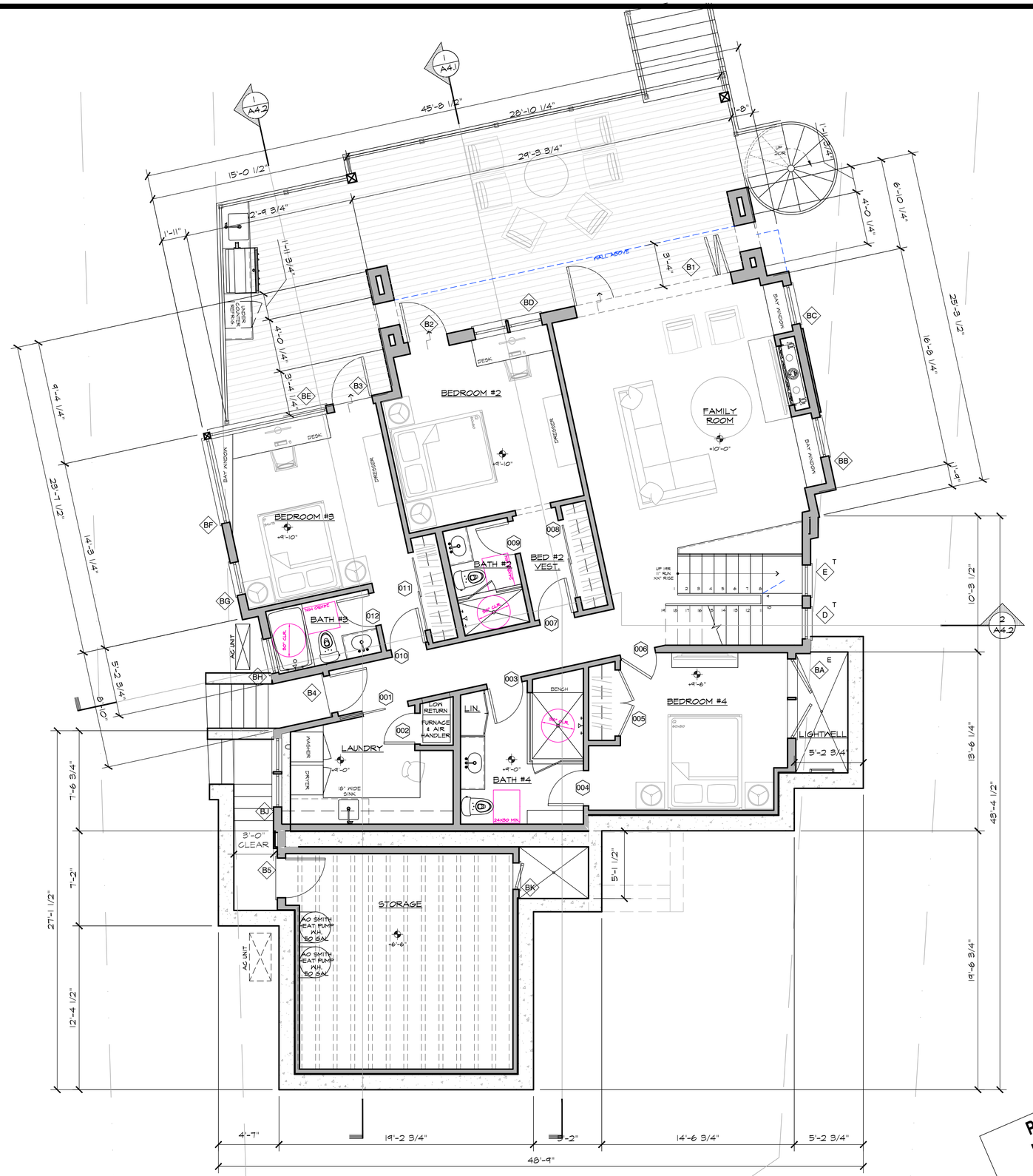

PROPOSED LOWER LEVEL DIMENSION PLAN

1/4" = 1'-0"

1

ISSUE LOG

DESIGN REVIEW SUBMITTAL MAY 20, 2025
DR PLAN CHECK RESUBMITTAL JUL. 15, 2025
DR PLAN CHECK RESUBMITTAL OCT. 03, 2025

LICENSED ARCHITECT ANDREW TERRELL YOUNG C-21679 REG. 4-30-26 STATE OF CALIFORNIA

Young & Borlik Architects
4962 EL CAMINO REAL, STE 218
LOS ALTOS, CALIFORNIA 94022
650-688-1950 | YBarchitects.com

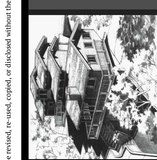

NEW RESIDENCE FOR:
ERIN AND EMILY CONLEY
962 HILLCREST DRIVE
REDWOOD CITY, CA 94062

A.P.N. 058-263-040

CHECKED	DRAWN
AEY	OH, MC

DATE SEP. 23. 2024

JOB # CONLEY

A2.1.2

Copyright 2025 YOUNG AND BORLIK ARCHITECTS INC. All designs, drawings, and written materials appearing herein, are protected and constitute original and unpublished work of the Architect and may not be revised, re-used, copied, or disclosed without the written consent of the Architect. Equipment manufactured by others is excluded. Drawings and specifications are instruments of architectural service, and shall remain the the property of the Architect. Use is restricted to the site for which they are prepared.

KEYNOTES (CONT.):

23. ACOUSTIC WALL.

24. PROVIDE CLOSET POLE AND SHELF AS SHOWN. VERIFY W/ OWNER FOR SELECTION.

25. CUSTOM BUILT-IN CABINETRY, VERIFY SHOP DRAWINGS WITH OWNER.

26. VERIFY ALL MASTER BATHROOM FINISHES AND FIXTURES WITH OWNER.

27. GARAGE INTERIOR MAIN DOOR TO BE MIN.1-3/8" THICK, TIGHT FITTING, 20 MIN. FIRE RATED W/ SMOKE SEAL, SELF CLOSER, AND SELF LATCHING.

28. GARAGE FLOORS SHALL BE SLOPED TO FACILITATE THE MOVEMENT OF LIQUIDS TO A DRAIN OR TOWARD THE MAIN VEHICLE ENTRY DOORWAY.

29. INSTALL (N) E.V. CHARGERS. VERIFY WITH OWNERS FOR CAR SPECIFICATIONS & WITH ELECTRICIAN IN FIELD

30. MINIMUM 30" X 60" ATTIC ACCESS WITH PULL DOWN LADDER. INSTALL WEATHERSTRIP OR SEAL AROUND ACCESS DOOR TO PREVENT DRAFTS.

31. (N) SKYLIGHT, SEE ROOF PLAN SHEET A2.3 AND DOOR AND WINDOW SCHEDULE SHEET A9.1

32. DASHED LINE INDICATES CEILING VAULT OR DECORATIVE BEAM AS NOTED.

33. (N) A.C. CONDENSER UNIT ON SLAB FOR UPPER FLOOR UNIT IN GARAGE ATTIC - SEE SHEET MP2.2.

34. ROOF LINE ABOVE DASHED - SEE SHEET A2.3.

NEW STAIR NOTES PER 2022 CRC R311.7

SN-1. STAIRWAY WIDTH. STAIRWAY SERVING AN OCCUPANT LOAD OF LESS THAN 50 SHALL HAVE A WIDTH OF NOT LESS THAN 36 INCHES.

SN-2. HEADROOM. STAIRWAYS SHALL HAVE A MINIMUM HEADROOM CLEARANCE OF 80 INCHES MEASURED VERTICALLY FROM A LINE CONNECTING THE EDGE OF THE NOSINGS. SUCH HEADROOM SHALL BE CONTINUOUS ABOVE THE STAIRWAY TO THE POINT WHERE THE LINE INTERSECTS THE LANDING BELOW, ONE TREAD DEPTH BEYOND THE BOTTOM RISER. THE MINIMUM CLEARANCE SHALL BE MAINTAINED THE FULL WIDTH OF THE STAIRWAY AND LANDING.

SN-3. WALKLINE. THE WALKLINE ACROSS WINDER TREADS SHALL BE CONCENTRIC TO THE DIRECTION OF TRAVEL THROUGH THE TURN AND LOCATED 12 INCHES FROM THE SIDE WHERE THE WINDERS ARE NARROWER. THE 12-INCH DIMENSION SHALL BE MEASURED FROM THE WIDEST POINT OF THE CLEAR STAIR WIDTH.

SN-4. STAIR TREADS AND RISERS. THE MAXIMUM RISER HEIGHT SHALL BE 7-3/4 INCHES; THE MINIMUM TREAD DEPTH SHALL BE 10 INCHES; THE MINIMUM WINDER TREAD DEPTH AT THE WALKLINE SHALL BE 10 INCHES; AND THE MINIMUM WINDER TREAD DEPTH SHALL BE 6 INCHES. A NOSING NOT LESS THAN 3/4 INCHES BUT NOT MORE THAN 1-1/4 INCHES SHALL BE PROVIDED ON STAIRWAYS WITH SOLID RISERS WHERE THE TREAD DEPTH IS LESS THAN 11 INCHES. EXCEPTION 2022 CRC R311.7.5.3.

SN-5. DIMENSIONAL UNIFORMITY. MAINTAIN REQUIRED RISE AND RUN DIMENSIONAL UNIFORMITY NOT TO EXCEED 3/8".

SN-6. ALL TREADS & RISERS TO BE HARDWOOD OR EQUAL. VERIFY W/OWNER. STAIR DESIGN & LAYOUT BY STAIR MANUFACTURER. PROVIDE SHOP DRAWINGS, FOR APPROVAL W/ARCHITECT & COMPLIANCE W/ C.R.C. IN FIELD PRIOR TO CONSTRUCTION.

SN-7. ENCLOSURE UNDER STAIRWAYS. SPACES UNDER STAIRWAYS SERVING AND CONTAINED WITHIN A SINGLE RESIDENTIAL DWELLING UNIT IN GROUP R-2 OR R-3 SHALL BE PERMITTED TO BE PROTECTED ON THE ENCLOSED SIDE WITH 1/2 INCH GYPSUM BOARD. 2019 CBC SECTION 1011.7.3, EXCEPTION. THERE SHALL BE NO ENCLOSED USABLE SPACE UNDER EXTERIOR EXIT STAIRWAYS UNLESS THE SPACE IS COMPLETELY ENCLOSED IN 1-HOUR FIRE-RESISTANCE-RATED CONSTRUCTION. THE OPEN SPACE UNDER EXTERIOR STAIRWAYS SHALL NOT BE USED FOR ANY PURPOSE.

SN-8. HANDRAILS. STAIRWAYS WITHIN DWELLING UNITS ARE PERMITTED TO HAVE A HANDRAIL ON ONE SIDE ONLY. HANDRAIL HEIGHT, MEASURED ABOVE STAIR TREAD NOSING, OR FINISH SURFACE OF RAMP SLOPE, SHALL BE UNIFORM, NOT LESS THAN 34 INCHES AND NOT MORE THAN 38 INCHES. REFER TO CRC SECTION R311.7.8.5 FOR HANDRAIL GRASPABILITY, TYPE I & II PROFILE.

SN-9. GUARDRAILS AT OPEN-SIDED WALKING SURFACES SHALL BE NOT LESS THAN 42" IN HEIGHT WITH GUARDS SPACED SUCH THAT A 4" SPHERE CANNOT PASS THROUGH, UNLESS THE GUARDS ARE ON THE OPEN SIDES OF STAIRS OR ALSO SERVES AS A HANDRAIL THEN THE HEIGHT SHALL NOT BE LESS THAN 34" NOR HIGHER THAN 38" AND THE GUARDS SHALL BE SPACED SUCH THAT A 4-3/8" SPHERE CANNOT PASS THROUGH (CRC R312.1.2 & R312.1.3). MUST RESIST A CONCENTRATED LOAD OF 200LB APPLIED ANY WHERE ALONG THE TOP RAILING, PER CBC 1607.8.1.

SN-10. HANDRAIL GRASPABILITY (2022 CBC 1014.3). ALL REQUIRED HANDRAILS SHALL COMPLY WITH SECTION R311.7.8.5 OR SHALL PROVIDE EQUIVALENT GRASPABILITY.

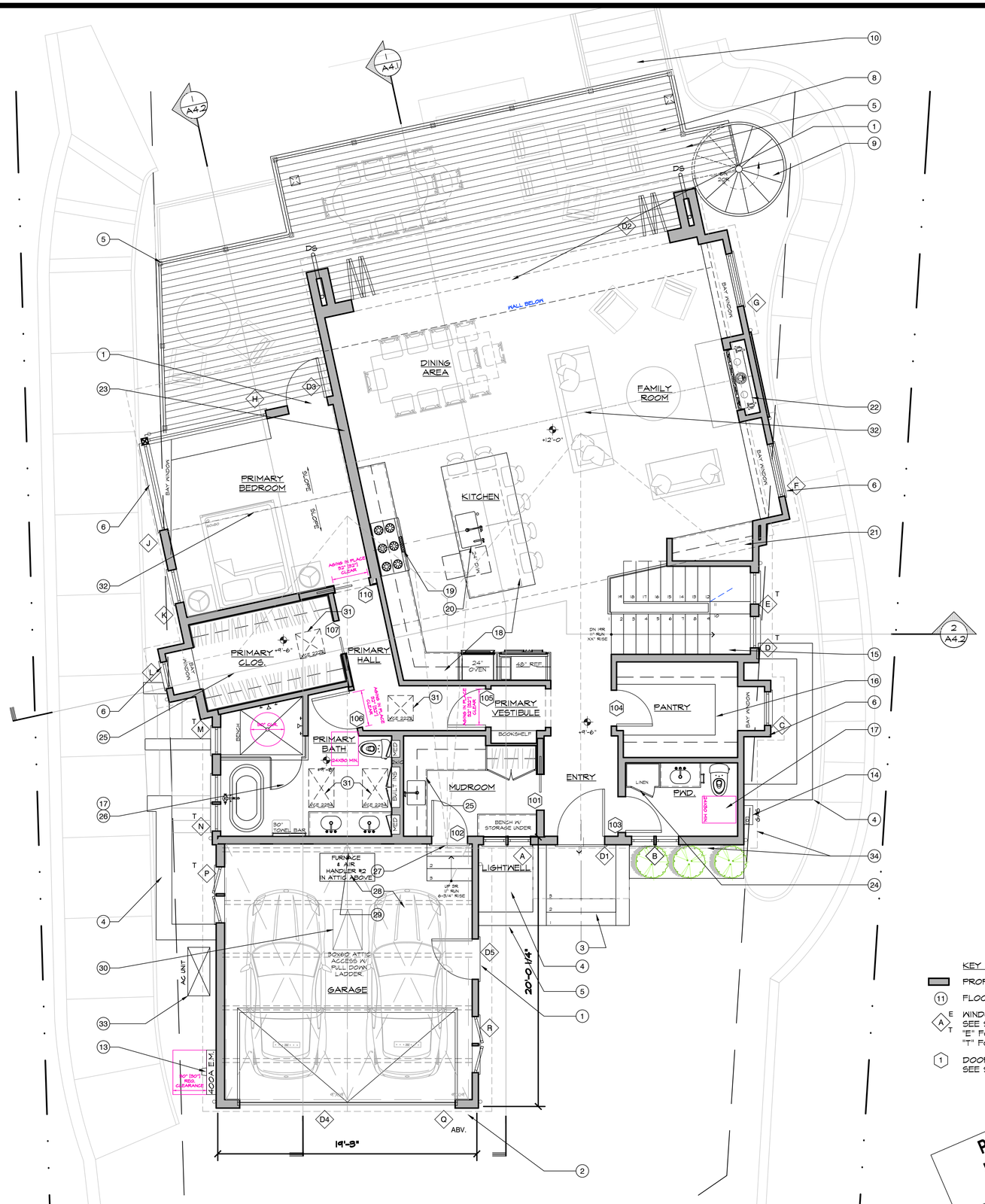

KEYNOTES

1. THERE SHALL BE A LANDING OR FLOOR ON EACH SIDE OF EACH EXTERIOR DOOR. THE WIDTH OF EACH LANDING SHALL NOT BE LESS THAN THE DOOR SERVED. EVERY LANDING SHALL HAVE A MINIMUM DIMENSION OF 36" MEASURED IN THE DIRECTION OF TRAVEL, WITH A MAXIMUM 1/4" PER FOOT SLOPE. LANDING OR FLOORS AT THE REQUIRED EGRESS DOOR SHALL NOT BE MORE THAN 1-1/2" LOWER THAN THE TOP OF THE THRESHOLD. EXCEPT, WHEN PROVIDING THE DOOR DOES NOT NOT SWING OVER THE LANDING OR FLOOR, A 7-3/4" ELEVATION CHANGE FROM THE TOP OF THE THRESHOLD IS PERMITTED. R311.3. THERE SHALL BE 1/4" SLOPE AWAY FROM THE BUILDING AT ALL PORCHES AND FLATWORK.

2. PROVIDE ADDRESS SIGN IN A POSITION THAT IS PLAINLY LEGIBLE AND VISIBLE FROM THE STREET OR ROAD FRONTING THE PROPERTY. THE NUMBERS SHALL CONTRAST WITH THEIR BACKGROUND. ADDRESS NUMBERS SHALL BE ARABIC NUMBERS OR ALPHABETICAL LETTERS. NUMBERS SHALL BE A MIN. OF 4" HIGH WITH A MIN. STROKE WIDTH OF 1/2". CRC R319.1.

3. STONE STEPS TO LANDING @ FRONT ENTRY. SEE ELEVATIONS.

4. LIGHTWELL TYP.

5. 42" HIGH METAL GUARD RAIL TYP. VERIFY SELECTION W/ OWNER.

6. BAY WINDOW PROJECTION OVER MINIMUM SETBACK. SEE DIMENSION PLAN SHEET A2.2.2 FOR DIMENSIONS OF PROJECTION.

7. ALL FLATWORK TO SLOPE 1/4" PER 1'-0" TO DRAIN. VERIFY WITH CONTRACTOR IN FIELD.

8. ENGINEERED WOOD DECK SLOPED 1/4" PER 1'-0" TOWARDS REAR PROPERTY LINE. VERIFY FINISH WITH OWNER.

9. CUSTOM METAL SPIRAL STAIR. CONTRACTOR TO VERIFY DIMENSIONS AND PROVIDE ARCHITECT SHOP DRAWINGS TO REVIEW PRIOR TO ORDER.

10. WOOD STEPS W/ 36" HIGH HANDRAILS TO GRADE BELOW. SEE STAIR NOTES ON THIS SHEET.

11. METAL TRELLIS ABOVE.

12. WOOD STEPS AT GRADE TO BASEMENT DECK BELOW. SEE SHEET A2.1.1.

13. NEW LOCATION FOR NEW 400 AMP ELECTRIC MAIN SERVICE PANEL & METER. SEE PROPOSED SITE PLAN SHEET A0.5.

14. NEW GAS METER. SEE PROPOSED SITE PLAN SHEET A0.5.

15. INTERIOR STAIRCASE. SEE STAIR NOTES ON THIS SHEET.

16. CUSTOM PANTRY CABINETRY, VERIFY REQUIREMENTS W/ OWNER

17. SEE BATHROOM NOTES ON SHEET A2.1.1

18. (N) KITCHEN CABINETS, COUNTERS, APPLIANCES, ACCESSORIES & FINISHES PER OWNER, TYPICAL, PROVIDE SHOP DRAWINGS FOR APPROVAL.
PROVIDE APPLIANCE DIMENSIONS, SPECIFICATIONS, CUT-OUTS, ELECTRICAL & GAS REQUIREMENTS, ETC. TO FRAMERS & CABINET MAKERS PRIOR TO CONSTRUCTION. PROVIDE BUILT-IN RECYCLING CENTER NEXT TO TRASH COMPACTOR.

19. 48" ELECTRIC RANGE AND WALL HOOD. KITCHEN EXHAUST FAN SHALL BE MIN. 180 FOR GAS RANGE. MAX 3 SONES AT ONE OR MORE AIRFLOW SETTINGS ≥ 100 CFM; NO SOUND LIMIT IF THE LOWEST FLOW RATE ≥ 400 CFM. MIN. 5" SMOOTH DUCT, NO LONGER THAN 25' OF DUCT RUN, SUBTRACT 15' OF ALLOWABLE LENGTH FOR EACH ELBOW. PROPOSE EXHAUST DUCT TERMINATED AT WALL. PROVIDE BACKDRAFT DAMPER ON KITCHEN RANGE HOOD. CONFIRM RANGE AND HOOD CLEARANCES AND MINIMUM CFM FOR EXHAUST OF FUEL GAS FUMES IN KITCHEN.

20. SINK IN ISLAND. REFER TO "SPECIAL VENTING FOR ISLAND FIXTURES"

21. CUSTOM BAR STORAGE CABINET.

22. DIRECT VENT OR POWER VENT GAS FIREPLACE. VERIFY SELECTIONS WITH OWNERS, INTERIOR DESIGNER, & ARCHITECT. CONTRACTOR SHALL PROVIDE SELECTED FIREPLACE MODEL NUMBERS TO BUILDING INSPECTOR FOR APPROVAL PRIOR TO PURCHASE AND INSTALLATION. ALL FACTORY BUILT FIREPLACES SHALL BE LISTED AND LABELED AND SHALL BE INSTALLED IN ACCORDANCE WITH ITS LISTING AND MANUFACTURER'S INSTALLATION INSTRUCTIONS. FACTORY BUILT FIREPLACES SHALL BE TESTED IN ACCORDANCE WITH UL 127. ALL INTERIOR FIREPLACES SHALL BE DIRECT-VENT, SEALED- COMBUSTION TYPE GAS FIREPLACE PER CGBC 4.503. VERIFY VENTING WITH STRUCTURAL ENGINEER AND ARCHITECT IN FIELD.

KEY TO SYMBOLS:

PROPOSED WALL

(11) FLOOR PLAN KEY NOTES

(A) E/T WINDOW UNIT SYMBOL, SEE SHEET A9.1 "E" FOR EGRESS "T" FOR TEMPERED

(1) DOOR UNIT SYMBOL, SEE SHEET A9.1

PRELIMINARY- NOT YET APPROVED FOR CONSTRUCTION

0' 1' 2' 5' 10'

N

PROPOSED UPPER LEVEL FLOOR PLAN

1/4" = 1'-0" | 1

ISSUE LOG

DESIGN REVIEW SUBMITTAL	MAY 20, 2025
DR PLAN CHECK RESUBMITTAL	JUL. 15, 2025
DR PLAN CHECK RESUBMITTAL	OCT. 03, 2025

LICENSED ARCHITECT ANDREW ERIK YOUNG C-21679 REN. 4-30-26 STATE OF CALIFORNIA

Young & Borlik Architects
4962 EL CAMINO REAL, STE 218
LOS ALTOS, CALIFORNIA 94022
650-688-1950 | YBarchitects.com

NEW RESIDENCE FOR:
ERIN AND EMILY CONLEY
962 HILLCREST DRIVE
REDWOOD CITY, CA 94062

A.P.N. 058-263-040

CHECKED	DRAWN
AEY	OH, MC

DATE SEP. 23. 2024

JOB # CONLEY

A2.2.1

Copyright 2025 YOUNG AND BORLIK ARCHITECTS INC. All designs, drawings, and written materials appearing herein, are protected and constitute original and unpublished work of the Architect and may not be revised, re-used, copied, or disclosed without the written consent of the Architect. Equipment manufactured by others is excluded. Drawings and specifications are instruments of architectural service, and shall remain the the property of the Architect. Use is restricted to the site for which they are prepared.

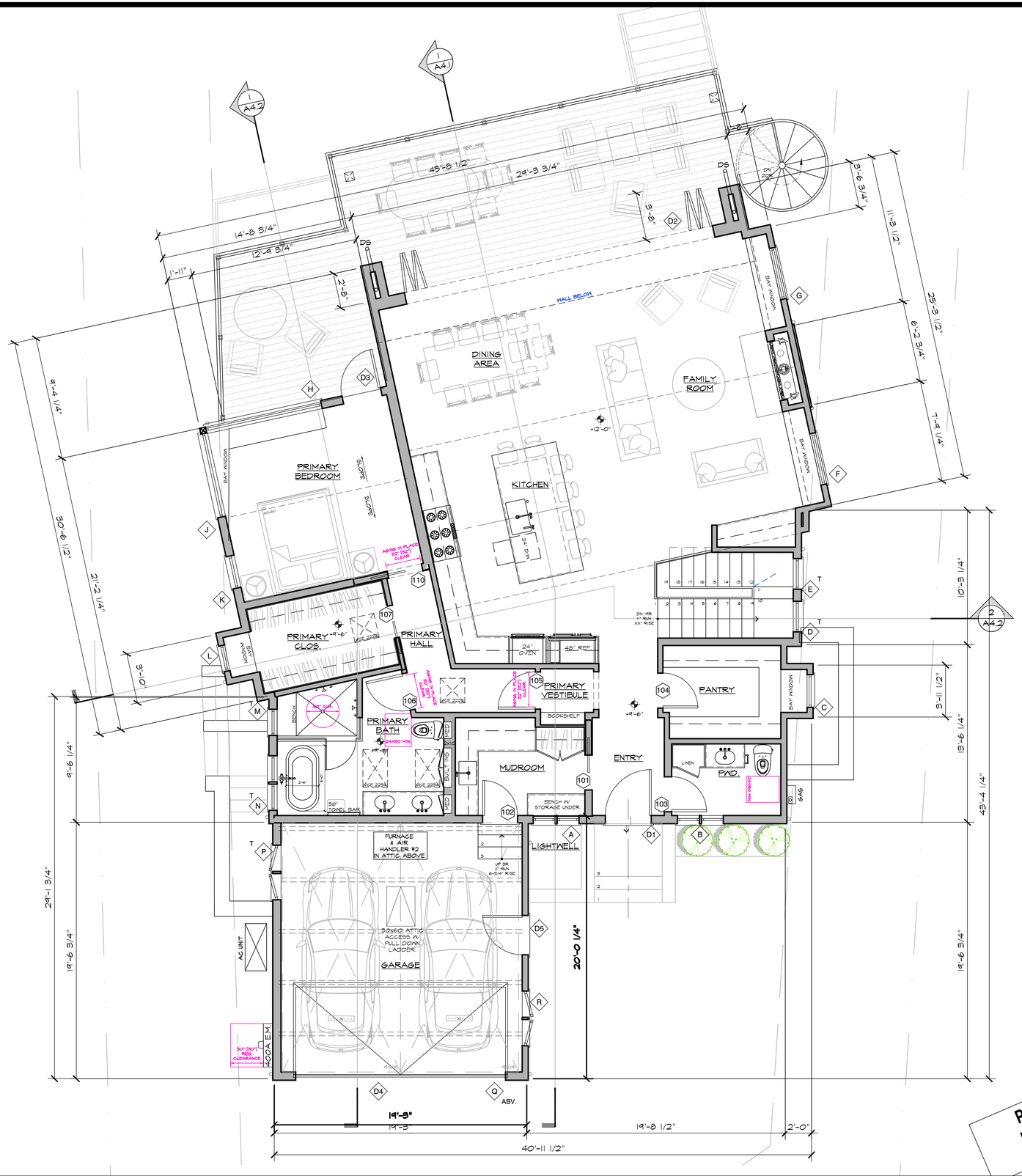

PROPOSED SECOND LEVEL DIMENSION PLAN

1/4" = 1'-0" | 1

ISSUE LOG
DESIGN REVIEW SUBMITTAL MAY 20, 2025
DR PLAN CHECK RESUBMITTAL JUL. 15, 2025
DR PLAN CHECK RESUBMITTAL OCT. 03, 2025

LICENSED ARCHITECT ANDREW BERLE YOUNG C-21679 REG. 4-30-26 STATE OF CALIFORNIA

Young & Borlik Architects
4962 EL CAMINO REAL, STE 218
LOS ALTOS, CALIFORNIA 94022
650-688-1950 | YBarchitects.com

NEW RESIDENCE FOR:
ERIN AND EMILY CONLEY
962 HILLCREST DRIVE
REDWOOD CITY, CA 94062

A.P.N. 058-263-040

CHECKED	DRAWN
AEY	OH, MC

DATE SEP. 23. 2024

JOB # CONLEY

A2.2.2

Copyright 2025 YOUNG AND BORLIK ARCHITECTS INC. All designs, drawings, and written materials appearing herein, are protected and constitute original and unpublished work of the Architect and may not be revised, re-used, copied, or disclosed without the written consent of the Architect. Equipment manufactured by others is excluded. Drawings and specifications are instruments of architectural service, and shall remain the the property of the Architect. Use is restricted to the site for which they are prepared.

2022 CALGREEN RESIDENTIAL MANDATORY MEASURES:

4.106.2. DEVELOP A PLAN TO MANAGE STORM WATER DRAINAGE CONSTRUCTION.

4.106.3. PLAN AND DEVELOP GRADING AND PAVING PLAN TO KEEP SURFACE WATER AWAY FROM BUILDINGS.

4.106.4 ELECTRIC VEHICLE (EV) CHARGING: FOR NEW CONSTRUCTION SHALL COMPLY WITH SECTION 4.106.4.1 OR 4.106.4.2 TO FACILITATE FUTURE INSTALLATION AND USE OF EV CHARGERS. ELECTRIC VEHICLE SUPPLY EQUIPMENT (EVSE) SHALL BE INSTALLED IN ACCORDANCE WITH THE CALIFORNIA ELECTRICAL CODE, ARTICLE 625

4.303.1.1. ALL TOILETS ARE MAXIMUM 1.28 GPF OR DUAL-FLUSH.

4.303.1.3.1. SHOWERHEADS HAVE MAX FLOW RATE OF 1.8 GPM AT 80 PSI. SHOWERHEADS SHALL BE CERTIFIED TO THE PERFORMANCE CRITERIA OF THE U.S. EPA WATERSENSE SPECS.

4.303.1.3.2. WHEN A SHOWER IS SERVED BY MORE THAN ONE SHOWERHEAD, THE COMBINED FLOW RATE OF ALL SHOWERHEADS AND/OR OTHER SHOWER OUTLETS CONTROLLED BY A SINGLE VALVE SHALL NOT EXCEED 1.8 GPM AT 80 PSI, OR THE SHOWER SHALL BE DESIGNED TO ALLOW ONLY ONE SHOWER OUTLET TO BE IN OPERATION AT A TIME.

4.303.1.4.1. MAX FLOW RATE FOR ALL LAVATORY FAUCETS IS 1.2 GPM AT 60 PSI. MIN FLOW RATE SHALL NOT BE LESS THAN 0.8 GPM AT 60 PSI.

4.303.1.4.4. KITCHEN FAUCETS SHALL NOT EXCEED 1.8 GPM AT 60 PSI. KITCHEN FAUCETS MAY TEMPORARILY INCREASE THE FLOW ABOVE THE MAXIMUM RATE, BUT NOT TO EXCEED 2.2 GPM AT 60 PSI, AND MUST DEFAULT TO A MAXIMIM FLOW RATE OF 1.8 GPM AT 60 PSI.

4.303.2 PLUMBING FIXTURES AND FITTINGS SHALL COMPLY WITH CA PLUMBING CODE.

4.304.1 ALL DEVELOPMENT SHALL COMPLY WITH A LOCAL WATER EFFICIENT LANDSCAPE ORDINANCE OR THE CURRENT CALIFORNIA DEPT OF WATER RESOURCES' MWELO. REFER TO https://www.water.ca.gov/

4.406.1. PROTECT ANNULAR SPACES AROUND PIPES, ELECTRIC CABLES, & CONDUITS AT EXTERIOR WALLS AGAINST THE PASSAGE OF RODENTS.

4.408.1. DIVERT A MINIMUM OF 65% OF CONSTRUCTION WASTE.

4.408.2. SUBMIT CONSTRUCTION WASTE MANAGEMENT PLAN OR IN ACCORDANCE WITH THE LOCAL ORDINANCE.

4.408.3 UTILIZE A WASTE MANAGEMENT COMPANY, APPROVED BY THE ENFORCING AGENCY, WHICH CAN PROVIDE VERIFIABLE DOCUMENTATION THAT THE PERCENTAGE OF CONSTRUCTION AND DEMOLITION WASTE MATERIAL DIVERTED FROM THE LANDFILL COMPLIES WITH SECTION 4.408.1.

4.410.1. AT PROJECT COMPLETION, PROVIDE A COPY OF THE OPERATIONS AND MAINTENANCE MANUAL TO THE BUILDING OCCUPANT OR OWNER ADDRESSING ITEMS 1 THROUGH 10.

4.503.1 ANY INDOOR GAS FIREPLACES INSTALLED SHALL BE A DIRECT-VENT SEALED-COMBUSTION TYPE. ANY INSTALLED WOODSTOVE OR PELLET STOVE SHALL COMPLY WITH US EPA NEW SOURCE PERFORMANCE STANDARDS (NSPS) EMISSION LIMITS AS APPLICABLE, AND SHALL HAVE A PERMANENT LABEL INDICATING THEY ARE CERTIFIED TO MEET THE EMISSION LIMITS. WOODSTOVES, PELLET STOVES AND FIREPLACES SHALL ALSO COMPLY WITH APPLICABLE LOCAL ORDINANCES

4.504.1. COVER DUCT OPENINGS AND OTHER RELATED AIR DISTRIBUTION COMPONENT OPENING DURING CONSTRUCTION.

4.504.2.1. ADHESIVES, SEALANTS, CAULKS AND OTHER TOXIC COMPOUNDS USED DURING CONSTRUCTION SHALL BE COMPLIANT WITH VOC LIMITS.

4.504.2.2. PAINTS, STAINS AND OTHER COATING SHALL BE COMPLIANT WITH VOC LIMITS.

4.504.2.3. AEROSOL PAINTS AND COATINGS SHALL BE COMPLIANT WITH PRODUCT WEIGHTED MIR LIMITS FOR ROC AND TOXIC COMPOUNDS.

4.504.3. CARPET AND CARPET SYSTEMS SHALL BE COMPLIANT WITH VOC LIMITS.

4.504.4. MINIMUM 80% OF FLOOR AREA RECEIVING RESILIENT FLOORING SHALL COMPLY WITH THE VOC EMISSION LIMITS PER SECTIONS.

4.504.5. COMPOSITE WOOD PRODUCTS, PARTICLE BOARD, MEDIUM DENSITY FIBERBOARD (MDF) AND HARDWOOD PLYWOOD USED IN INTERIOR FINISH SYSTEMS SHALL COMPLY WITH LOW FORMALDEHYDE EMISSION STANDARDS.

4.505.2. INSTALL CAPILLARY BREAK VAPOR RETARDER AT SLAB ON GRADE FOUNDATIONS.

4.505.3. WALL AND FLOOR FRAMING SHALL NOT BE ENCLOSED WHEN THE FRAMING MEMBERS EXCEED 19 PERCENT MOISTURE CONTENT.BUILDING MATERIALS WITH VISIBLE SIGNS OF WATER DAMAGE SHALL NOT BE INSTALLED.

4.507.2. DUCT SYSTEMS ARE SIZED & DESIGNED WITH EQUIPMENT SELECTED PER SECTION. HVAC SYSTEM INSTALLERS MUST BE TRAINED AND CERTIFIED, AND SPECIAL INSPECTORS EMPLOYED BY THE ENFORCING AGENCY MUST BE QUALIFIED.

ROOF INSULATION & VENTILATION:

PROVIDE 2" OF CLOSED CELL POLYURETHANE FOAM INSULATION (INTERTEK CCRR-1108 "ICYNENE PRO-SEAL HFO), OR APPROVED EQUIVALENT LOW V.O.C. & FORMALDEHYDE-FREE ALTERNATE, APPLIED DIRECTLY TO UNDERSIDE OF SHEATHING AT RAFTER BAYS FOR UNVENTED CONDITIONED ATTIC SPACE. INSULATION SHALL BE APPLIED IN ACCORDANCE W/ MANUFACTURERS SPECS FOR R-12 INSULATION VALUE.

WITH ADDITIONAL R-19 FIBERGLAS BATT INSULATION PER TITLE 24 ENERGY ANALYSIS (TOTAL R-30 INSULATION VALUE).

SEE ALSO EAVE DETAILS A4.1

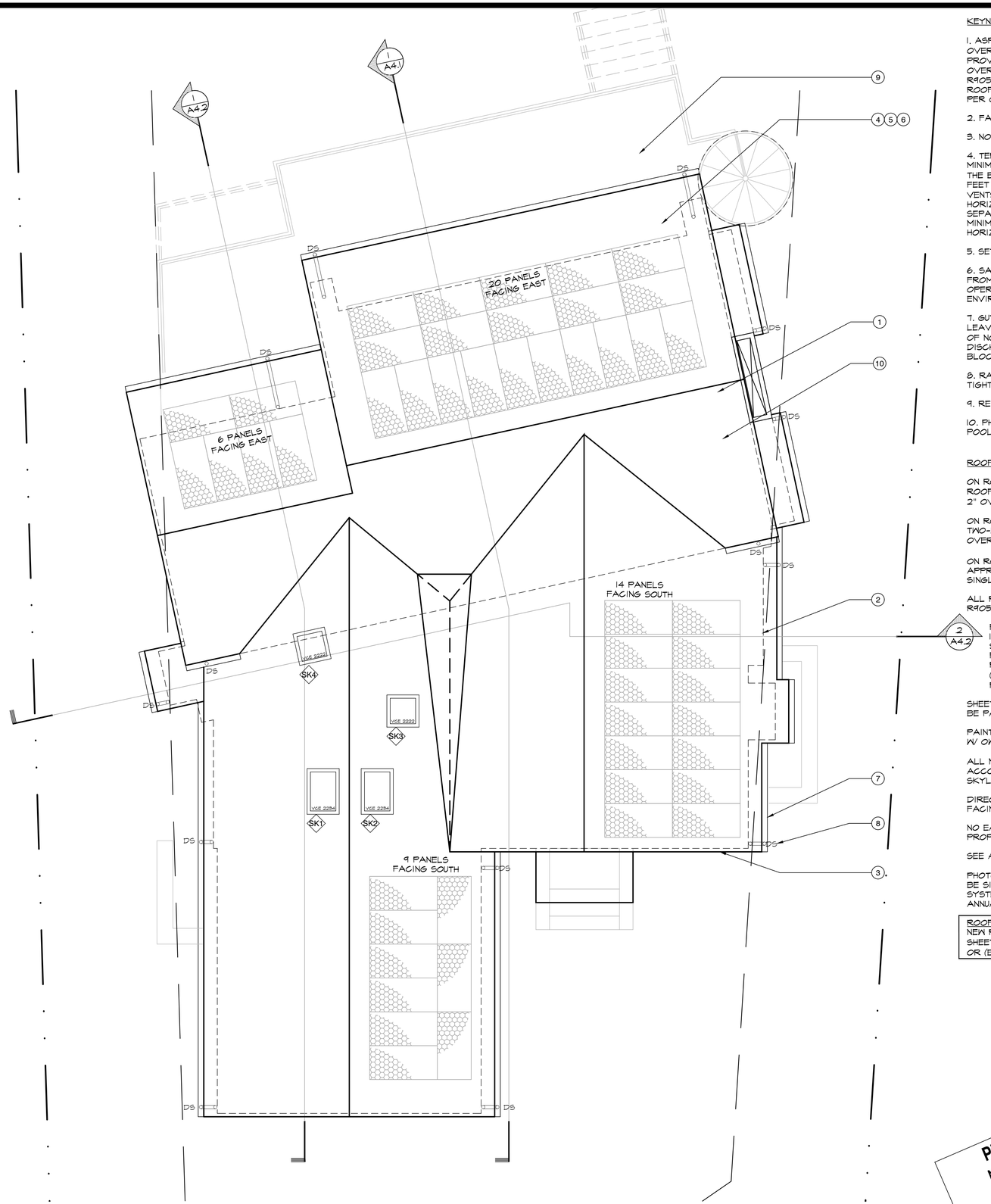

KEYNOTES:

1. ASPHALT COMPOSITE SHINGLE ROOF (CLASS A) OVER 30# FELT OVER PLYWD. SHEATHING OVER ENGINEERED ROOF (PER STRUCTURAL). PROVIDE TWO-LAYERS OF UNDERLAYMENT, OF 36" WIDTH SHEETS W/ 19" OVERLAP OVER 19" STARTING STRIP, PER TABLE R905.1.1(2). SEE CRC R905.2 REQMTS FOR INSTALLATION, UNDERLAYMENT, FLASHING, ETC. ROOF COVERING SHALL BE NO LESS THAN CLASS "C" RATED ROOF PER CRC R902.

2. FACE OF STUD WALL BELOW DASHED.

3. NO PLUMBING OR FURNACE VENTS AT FRONT ELEVATION OF HOUSE.

4. TERMINATION OF ALL ENVIRONMENTAL AIR DUCTS SHALL BE A MINIMUM OF 10 FEET FROM PROPERTY LINES OR ANY OPENINGS INTO THE BUILDING (I.E. DRYERS, BATH, AND UTILITY FANS, ETC. MUST BE 10 FEET AWAY FROM DOORS, WINDOWS, OPENING SKYLIGHTS OR ATTIC VENTS). WHERE SPACE LIMITATION ABSOLUTELY PREVENTS A 10 FEET HORIZONTAL SEPARATION FROM AN AIR INTAKE, A VERTICAL SEPARATION SHALL BE PERMITTED, WITH THE EXHAUST OUTLET BEING A MINIMUM OF 3 FEET ABOVE ANY AIR INTAKE LOCATED WITHIN TEN FEET HORIZONTAL

5. SET ROOF JACKS AT LEAST 18" AWAY FROM ROOF EDGES.

6. SANITARY SEWER VENTS SHALL TERMINATE AT LEAST 10'-0" AWAY FROM, OR AT LEAST 3' ABOVE ANY ENVIRONMENTAL AIR DUCTS OR OPERABLE SKYLIGHTS. REVIEW MEP PLANS FOR SUGGESTED ENVIRONMENTAL AIR DUCTS TERMINATION LOCATION.

7. GUTTERS W/ GUTTER GUARD TO PREVENT ACCUMULATION OF LEAVES & DEBRIS, VERIFY SELECTION W/ OWNER. GUTTERS ARE TO BE OF NON-COMBUSTIBLE MATERIAL. (I.E. SHEET METAL) WITH RWL DISCHARGE TO SUB-DRAIN TIGHT LINE OR TO SPLASH CONCRETE BLOCK PER CIVIL.

8. RAIN WATER LEADER AT ROOF DISCHARGE TO 4" PVC SUBDRAIN TIGHTLINE OR CONCRETE SPLASH BLOCK PER CIVIL PLANS

9. RETRACTABLE FABRIC AWNING AT UPPER LEVEL.

10. PHOTOVOLTAIC SOLAR PANEL AND WATER SOLAR FOR SWIMMING POOL PER SOLAR COMPANY DESIGN.

ROOFING GENERAL NOTES:

ON ROOF SECTIONS OF 4:12 PITCH AND GREATER, ONE-LAYER 15# ROOFING FELT (or APPROVED EQUIVALENT) OF 36" WIDTH SHEETS W/ 2" OVERLAP, PER TABLE R905.1.1(2)

ON ROOF SLOPES AT LEAST 2:12 AND UP TO 4:12, PROVIDE TWO-LAYERS OF UNDERLAYMENT, OF 36" WIDTH SHEETS W/ 19" OVERLAP OVER 19" STARTING STRIP, PER TABLE R905.1.1(2)

ON ROOF SLOPES LESS THAN 2:12 BUT AT LEAST 1/4:12, PROVIDE APPROVED BUILT-UP ROOFING, MODIFIED BITUMENT, OR THERMOSET SINGLE-PLY MEMBRANE SYSTEM.

ALL ROOFING FASTENERS SHALL BE CORROSION-RESISTANT PER CRC R905.2.5

2 A4.2 FLASHING SHALL BE INSTALLED AT WALL AND ROOF INTERSECTIONS, GUTTERS, WHEREVER THERE IS A CHANGE IN ROOF SLOPE OR DIRECTION, AND AROUND ROOF OPENINGS. WHERE FLASHING IS OF METAL, THE METAL SHALL BE CORROSION RESISTANT WITH A THICKNESS OF NOT LESS THAN 0.019 INCHES (0.483 MM) (E.G. NO. 26 GALVANIZED SHEET) AND SHALL BE PRIMED AND PAINTED. [PAMC 16.06.253]

SHEET METAL AT CHIMNEY CRICKET AND FLASHING CONDITIONS SHALL BE PAINTED TO MATCH ROOF, TYP.

PAINTED G.I. SHEET METAL GUTTERS W/ DOWNSPOUTS, VERIFY IN FIELD W/ OWNER

ALL NEW SKYLIGHTS BY "VELUX", (WDMA TESTING REPORT UES-199) IN ACCORDANCE WITH AAMA/WDMA/CSA 101/I.S.2/A440-08 & -05 SEE SKYLIGHT SCHEDULE A9.1 FOR MODEL #.

DIRECT ROOF JACKS, VENTS, AND OTHER PENETRATIONS TO THE REAR FACING ROOF PLANE WHERE POSSIBLE.

NO EAVES ALLOWED WHEN LOCATED LESS THAN 2 FT. FROM THE PROPERTY LINE, CBC 704.2

SEE ALSO STRUCTURAL DETAILS.

PHOTOVOLTAIC SYSTEM (UNDER SEPARATE PERMIT APPLICATION) TO BE SIZED PER TITLE 24 ENERGY REPORT. PREWIRED TO EXPAND SYSTEM TO ACCOMMODATE ALL ELECTRIC BUILDING TO 100% OF ANNUAL KWh CONSUMPTION OFFSET.

ROOF HEIGHT NOTE:
NEW ROOF HEIGHT ABOVE GRADE - SEE ROOF & CONTOUR PLAN ON SHEET A0.6.2 FOR (N) ROOF HEIGHTS ABOVE LOWEST SITE GRADE (N) OR (E).

PRELIMINARY-
NOT YET APPROVED
FOR CONSTRUCTION

N

0' 1' 2' 5' 10'

PROPOSED ROOF PLAN

1/4" = 1'-0" | 1

ISSUE LOG

DESIGN REVIEW SUBMITTAL	MAY 20, 2025
DR PLAN CHECK RESUBMITTAL	JUL. 15, 2025
DR PLAN CHECK RESUBMITTAL	OCT. 03, 2025

LICENSED ARCHITECT ANDREW ERNLE YOUNG C-21679 STATE OF CALIFORNIA

Young & Borlik Architects
4962 EL CAMINO REAL, STE 218
LOS ALTOS, CALIFORNIA 94022
650-688-1950 | YBarchitects.com

NEW RESIDENCE FOR:
ERIN AND EMILY CONLEY
962 HILLCREST DRIVE
REDWOOD CITY, CA 94062

A.P.N. 058-263-040

CHECKED	DRAWN
AEY	OH, MC

DATE SEP. 23. 2024

JOB # CONLEY

A2.3

Copyright 2025 YOUNG AND BORLIK ARCHITECTS INC. All designs, drawings, and written materials appearing herein, are protected and constitute original and unpublished work of the Architect and may not be revised, re-used, copied, or disclosed without the written consent of the Architect. Equipment manufactured by others is excluded. Drawings and specifications are instruments of architectural service, and shall remain the the property of the Architect. Use is restricted to the site for which they are prepared.

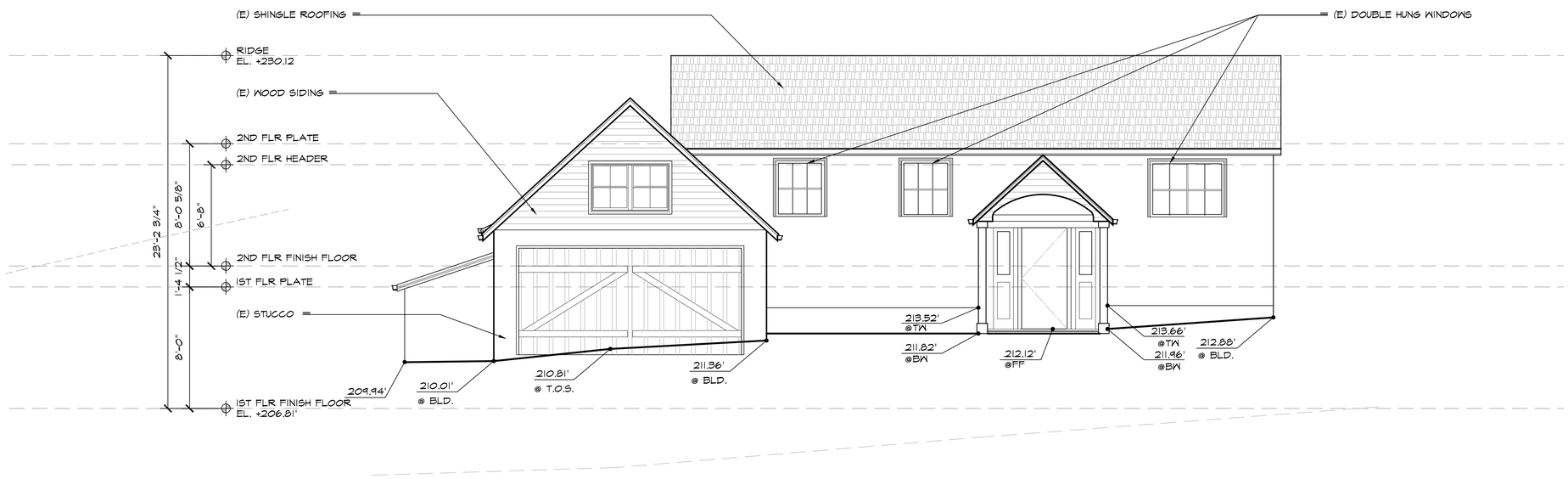

EXISTING FRONT ELEVATION

1/4" = 1'-0" | 2

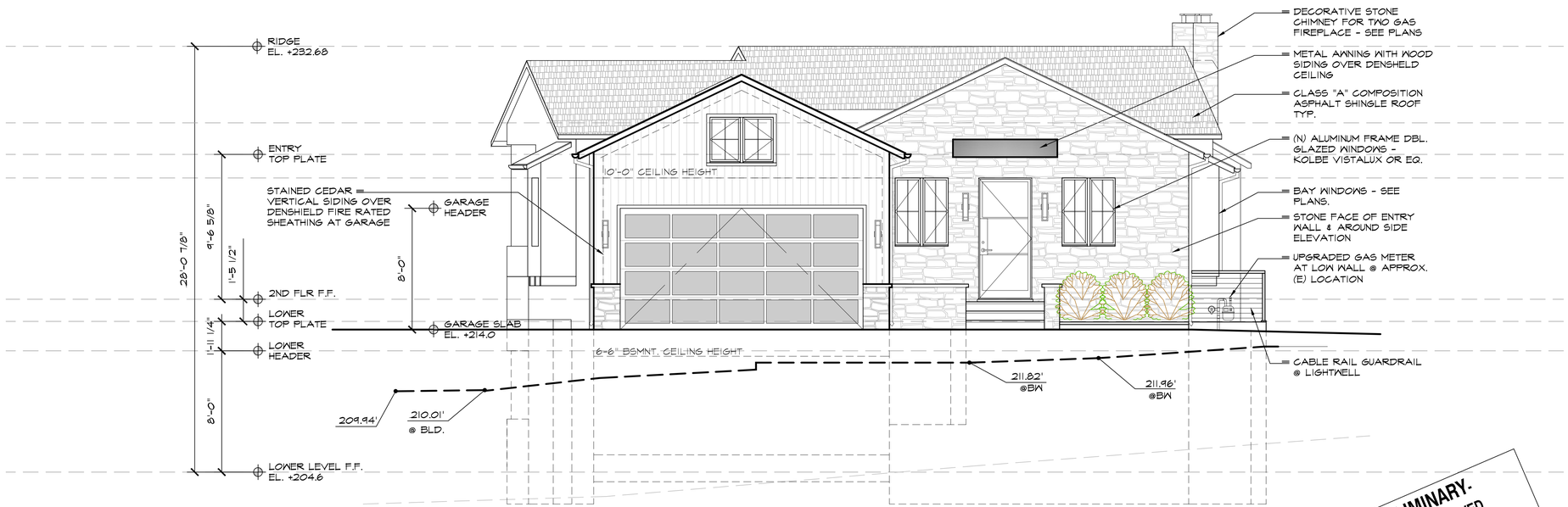

PROPOSED FRONT ELEVATION

1/4" = 1'-0" | 1

ISSUE LOG

DESIGN REVIEW SUBMITTAL	MAY 20, 2025
DR PLAN CHECK RESUBMITTAL	JUL. 15, 2025
DR PLAN CHECK RESUBMITTAL	OCT. 03, 2025

LICENSED ARCHITECT ERNLE YOUNG C-21679 STATE OF CALIFORNIA

Young & Borlik Architects
4962 EL CAMINO REAL, STE 218
LOS ALTOS, CALIFORNIA 94022
650-688-1950 | YBarchitects.com

Y&B

NEW RESIDENCE FOR:
ERIN AND EMILY CONLEY
962 HILLCREST DRIVE
REDWOOD CITY, CA 94062

A.P.N. 058-263-040

CHECKED	DRAWN
AEY	OH, MC

DATE SEP. 23. 2024

JOB # CONLEY

A3.1

Copyright 2025 YOUNG AND BORLIK ARCHITECTS INC. All designs, drawings, and written materials appearing herein, are protected and constitute original and unpublished work of the Architect and may not be revised, re-used, copied, or disclosed without the written consent of the Architect. Equipment manufactured by others is excluded. Drawings and specifications are instruments of architectural service, and shall remain the the property of the Architect. Use is restricted to the site for which they are prepared.

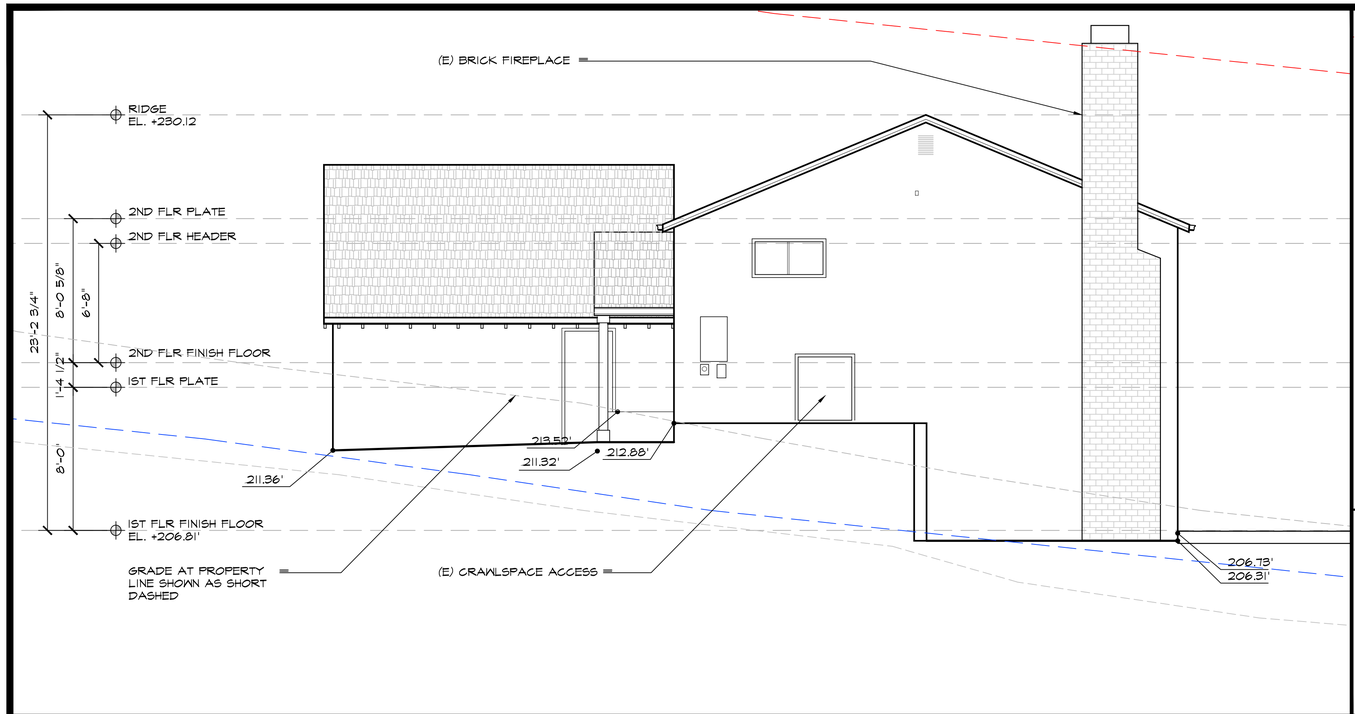

EXISTING RIGHT SIDE ELEVATION 1/4" = 1'-0" 3

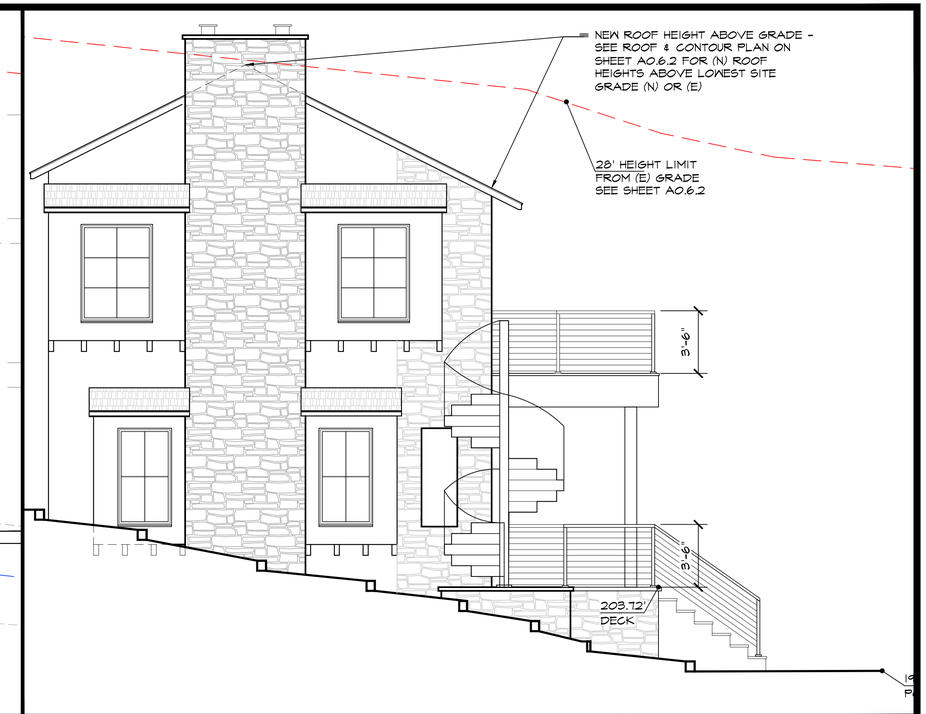

PARTIAL PROPOSED SIDE ELEVATION (STRAIGHT VIEW) 1/4" = 1'-0" 2

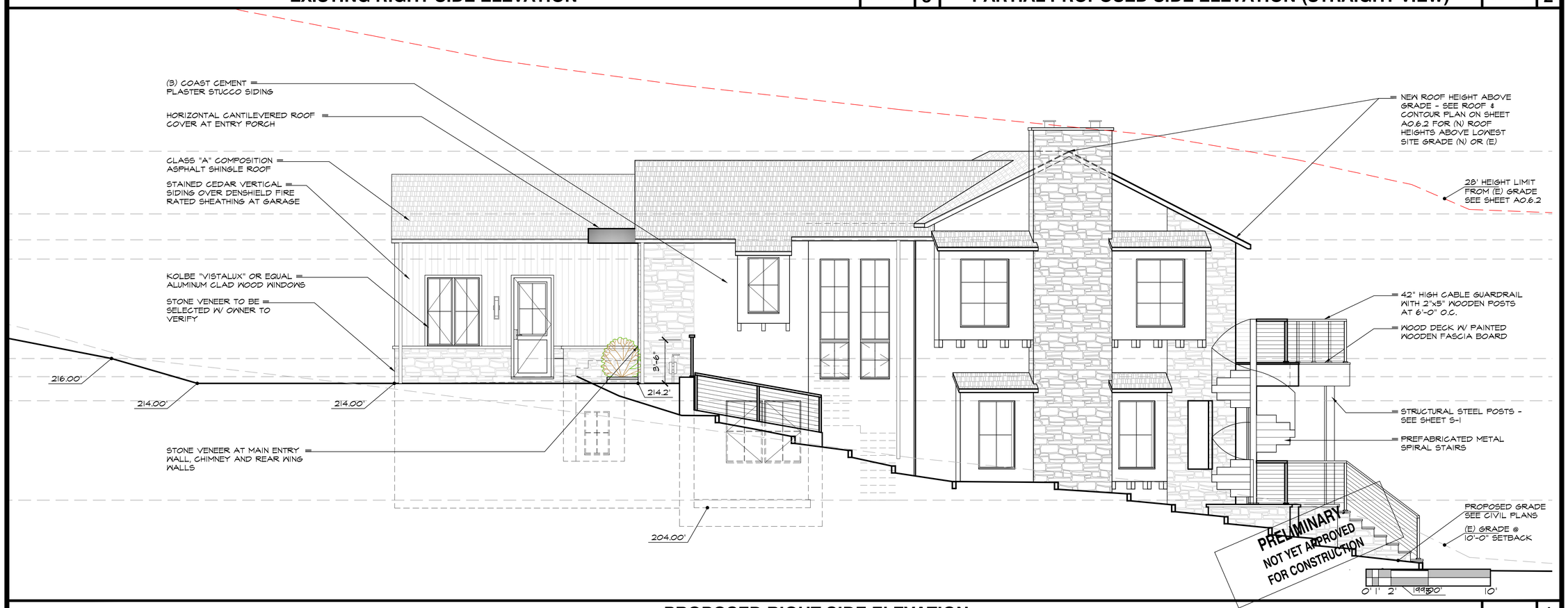

PROPOSED RIGHT SIDE ELEVATION 1/4" = 1'-0" 1

ISSUE LOG
DESIGN REVIEW SUBMITTAL MAY 20, 2025
DR PLAN CHECK RESUBMITTAL JUL. 15, 2025
DR PLAN CHECK RESUBMITTAL OCT. 03, 2025

LICENSED ARCHITECT ANDREW ERNLE YOUNG C-21679 STATE OF CALIFORNIA

Young & Borlik Architects
4962 EL CAMINO REAL, STE 218
LOS ALTOS, CALIFORNIA 94022
650-688-1950 | YBarchitects.com

NEW RESIDENCE FOR:
ERIN AND EMILY CONLEY
962 HILLCREST DRIVE
REDWOOD CITY, CA 94062

A.P.N. 058-263-040

CHECKED	DRAWN
AEY	OH, MC

DATE SEP. 23. 2024

JOB # CONLEY

A3.2

Copyright 2025 YOUNG AND BORLIK ARCHITECTS INC. All designs, drawings, and written materials appearing herein, are protected and constitute original and unpublished work of the Architect and may not be revised, re-used, copied, or disclosed without the written consent of the Architect. Equipment manufactured by others is excluded. Drawings and specifications are instruments of architectural service, and shall remain the the property of the Architect. Use is restricted to the site for which they are prepared.

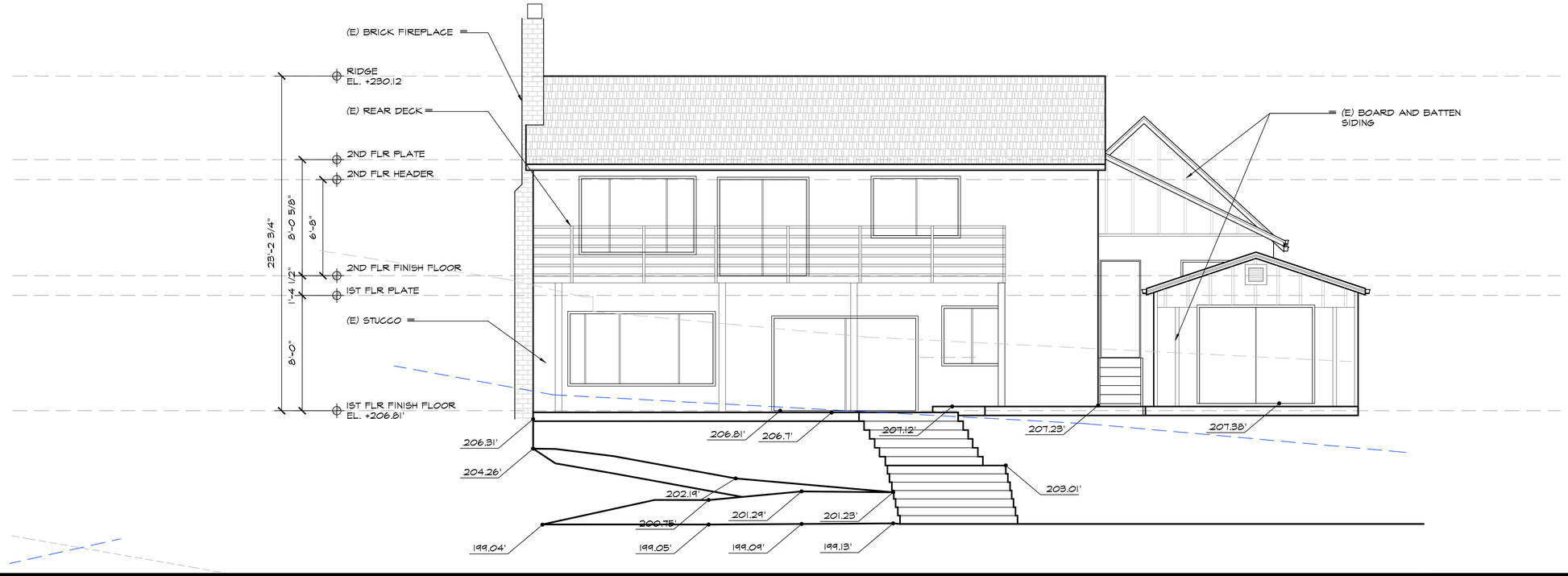

EXISTING REAR ELEVATION

1/4" = 1'-0" | 2

PROPOSED REAR ELEVATION

1/4" = 1'-0" | 1

ISSUE LOG

DESIGN REVIEW SUBMITTAL	MAY 20, 2025
DR PLAN CHECK RESUBMITTAL	JUL. 15, 2025
DR PLAN CHECK RESUBMITTAL	OCT. 03, 2025

LICENSED ARCHITECT ERIC YOUNG C-21679 STATE OF CALIFORNIA

Young & Borlik Architects
4962 EL CAMINO REAL, STE 218
LOS ALTOS, CALIFORNIA 94022
650-688-1950 | YBarchitects.com

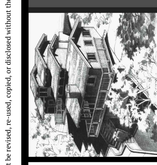

NEW RESIDENCE FOR:
ERIN AND EMILY CONLEY
962 HILLCREST DRIVE
REDWOOD CITY, CA 94062

A.P.N. 058-263-040

CHECKED	DRAWN
AEY	OH, MC

DATE SEP. 23. 2024

JOB # CONLEY

A3.3

Copyright 2023 YOUNG AND BORLIK ARCHITECTS INC. All designs, drawings, and written materials appearing herein, are protected and constitute original and unpublished work of the Architect and may not be revised, re-used, copied, or disclosed without the written consent of the Architect. Equipment manufactured by others is excluded. Drawings and specifications are instruments of architectural service, and shall remain the the property of the Architect. Use is restricted to the site for which they are prepared.

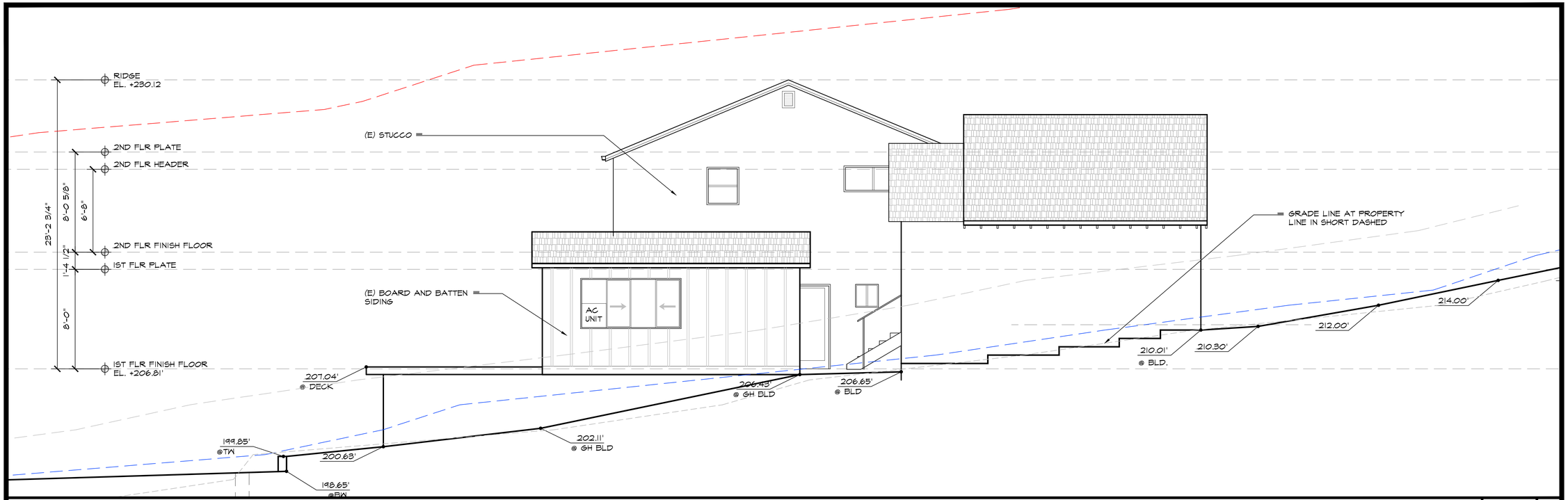

EXISTING LEFT SIDE ELEVATION

1/4" = 1'-0" | 2

PROPOSED LEFT SIDE ELEVATION

1/4" = 1'-0" | 1

ISSUE LOG
DESIGN REVIEW SUBMITTAL MAY 20, 2025
DR PLAN CHECK RESUBMITTAL JUL. 15, 2025
DR PLAN CHECK RESUBMITTAL OCT. 03, 2025

LICENSED ARCHITECT ANDREW BERLE YOUNG C-21679 REN. 4-30-26 STATE OF CALIFORNIA

Young & Borlik Architects
4962 EL CAMINO REAL, STE 218
LOS ALTOS, CALIFORNIA 94022
650-688-1950 | YBarchitects.com

NEW RESIDENCE FOR:
ERIN AND EMILY CONLEY
962 HILLCREST DRIVE
REDWOOD CITY, CA 94062

A.P.N. 058-263-040

CHECKED	DRAWN
AEY	OH, MC

DATE SEP. 23, 2024

JOB # CONLEY

A3.4

Copyright 2023 YOUNG AND BORLIK ARCHITECTS INC. All designs, drawings, and written materials appearing herein, are protected and constitute original and unpublished work of the Architect and may not be revised, re-used, copied, or disclosed without the written consent of the Architect. Equipment manufactured by others is excluded. Drawings and specifications are instruments of architectural service, and shall remain the the property of the Architect. Use is restricted to the site for which they are prepared.

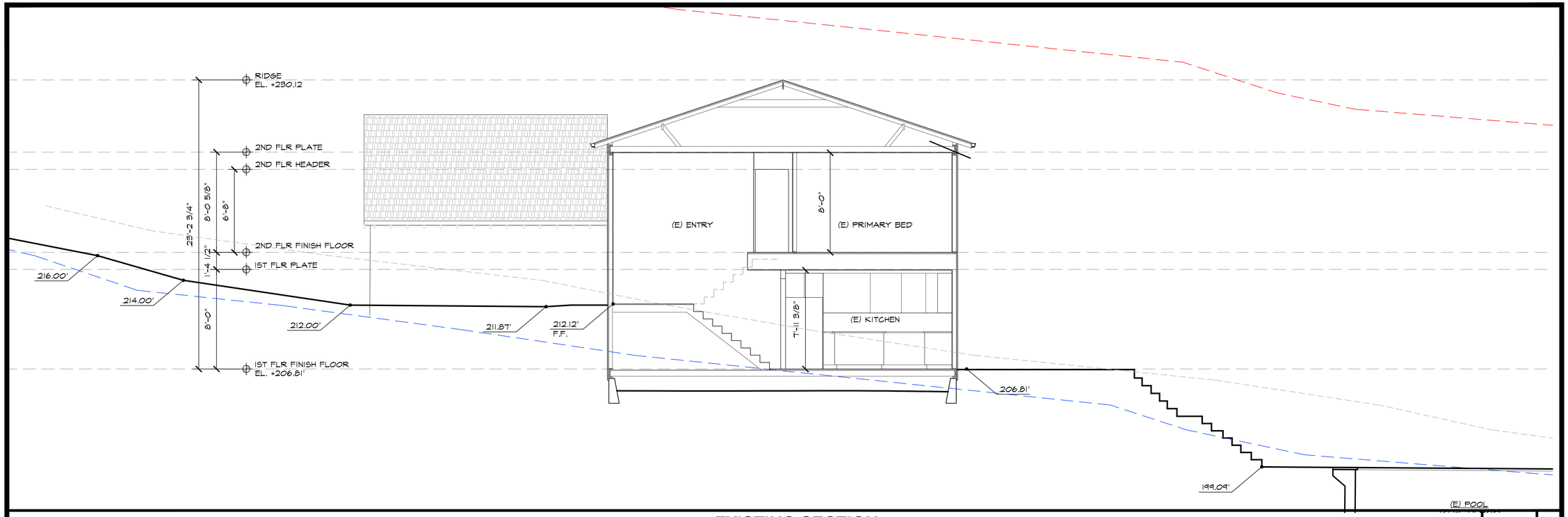

EXISTING SECTION

1/4" = 1'-0" | 2

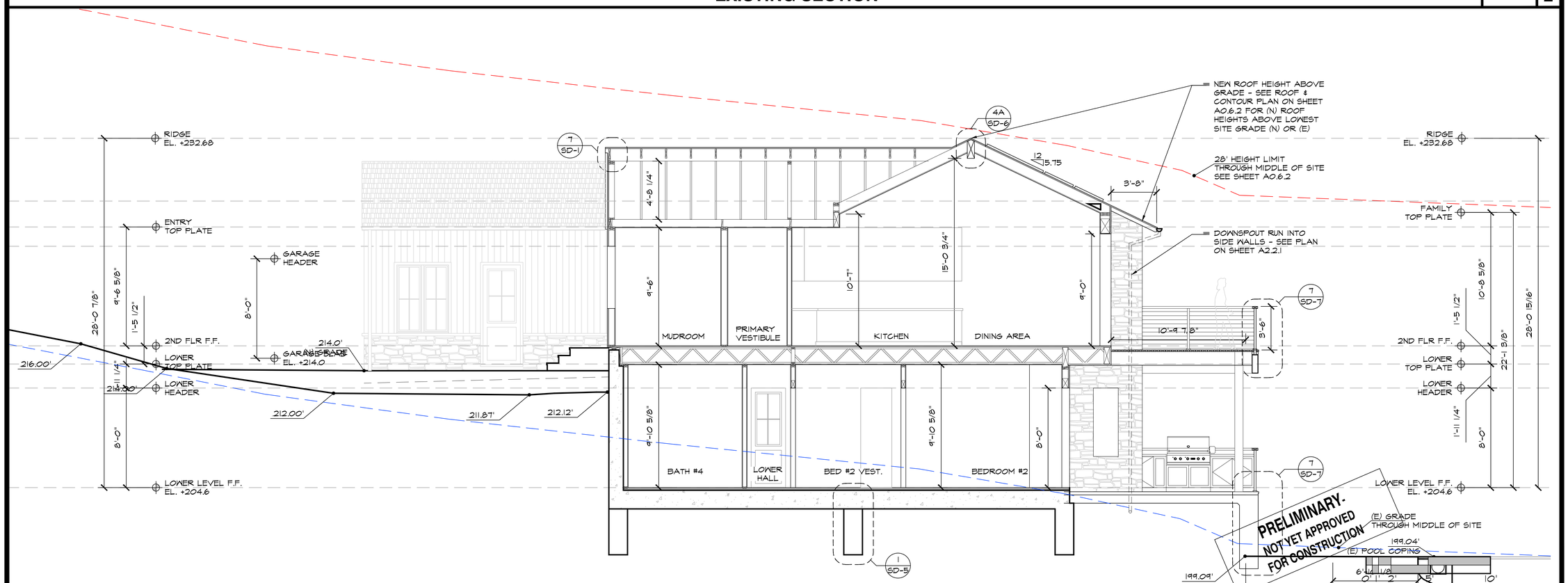

PROPOSED SECTION

1/4" = 1'-0" | 1

ISSUE LOG

DESIGN REVIEW SUBMITTAL	MAY 20, 2025
DR PLAN CHECK RESUBMITTAL	JUL. 15, 2025
DR PLAN CHECK RESUBMITTAL	OCT. 03, 2025

LICENSED ARCHITECT ANDREW ERNLE YOUNG C-21679 REN. 4-30-26 STATE OF CALIFORNIA

Young & Borlik Architects
4962 EL CAMINO REAL, STE 218
LOS ALTOS, CALIFORNIA 94022
650-688-1950 | YBarchitects.com

NEW RESIDENCE FOR:
ERIN AND EMILY CONLEY
962 HILLCREST DRIVE
REDWOOD CITY, CA 94062

A.P.N. 058-263-040

CHECKED	DRAWN
AEY	OH, MC

DATE SEP. 23. 2024

JOB # CONLEY

A4.1

Copyright 2025 YOUNG AND BORLIK ARCHITECTS INC. All designs, drawings, and written materials appearing herein, are protected and constitute original and unpublished work of the Architect and may not be revised, re-used, copied, or disclosed without the written consent of the Architect. Equipment manufactured by others is excluded. Drawings and specifications are instruments of architectural service, and shall remain the the property of the Architect. Use is restricted to the site for which they are prepared.

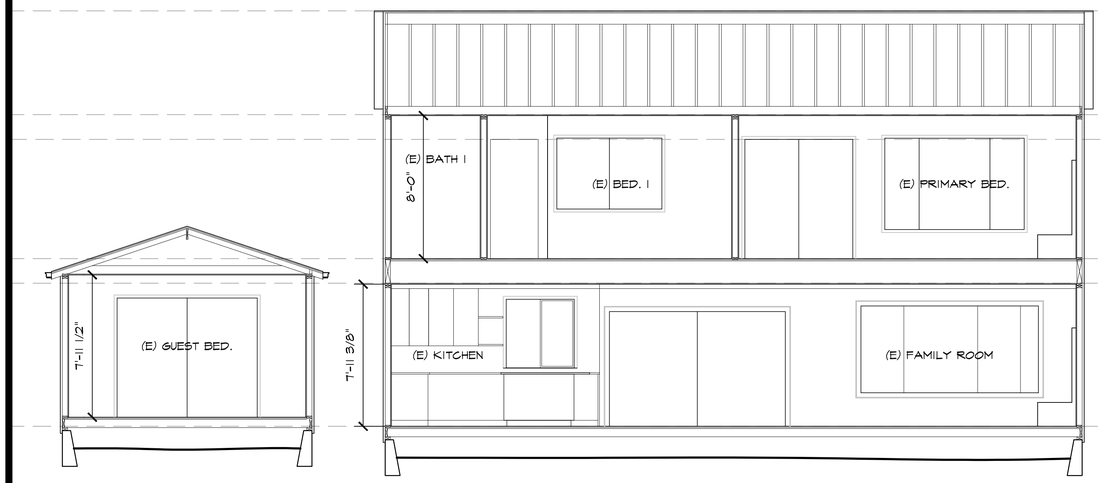

EXISTING SECTION 1/4" = 1'-0" 3

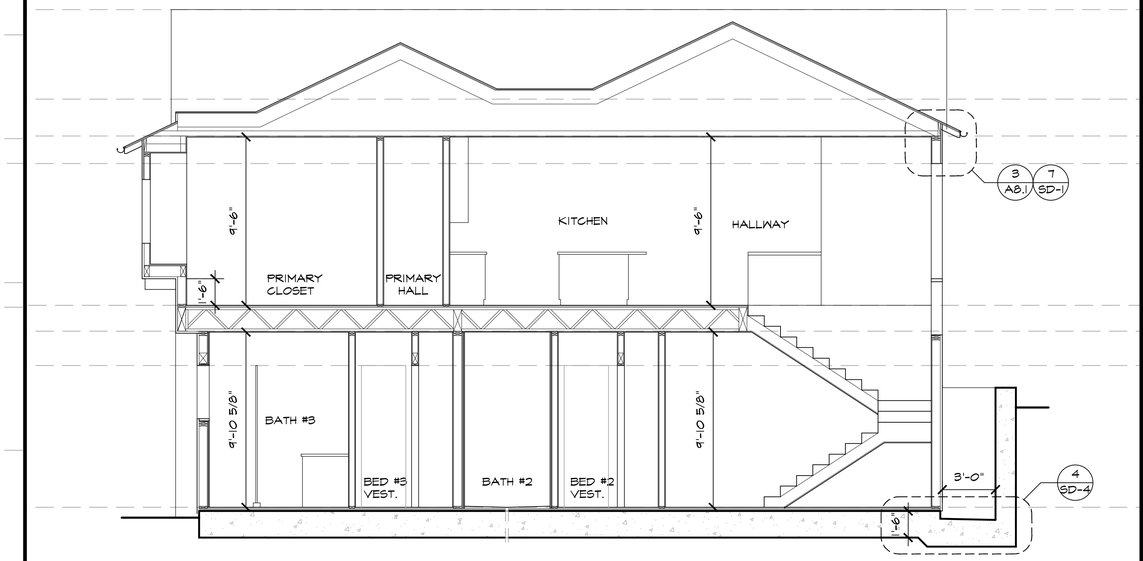

PROPOSED SECTION 1/4" = 1'-0" 2

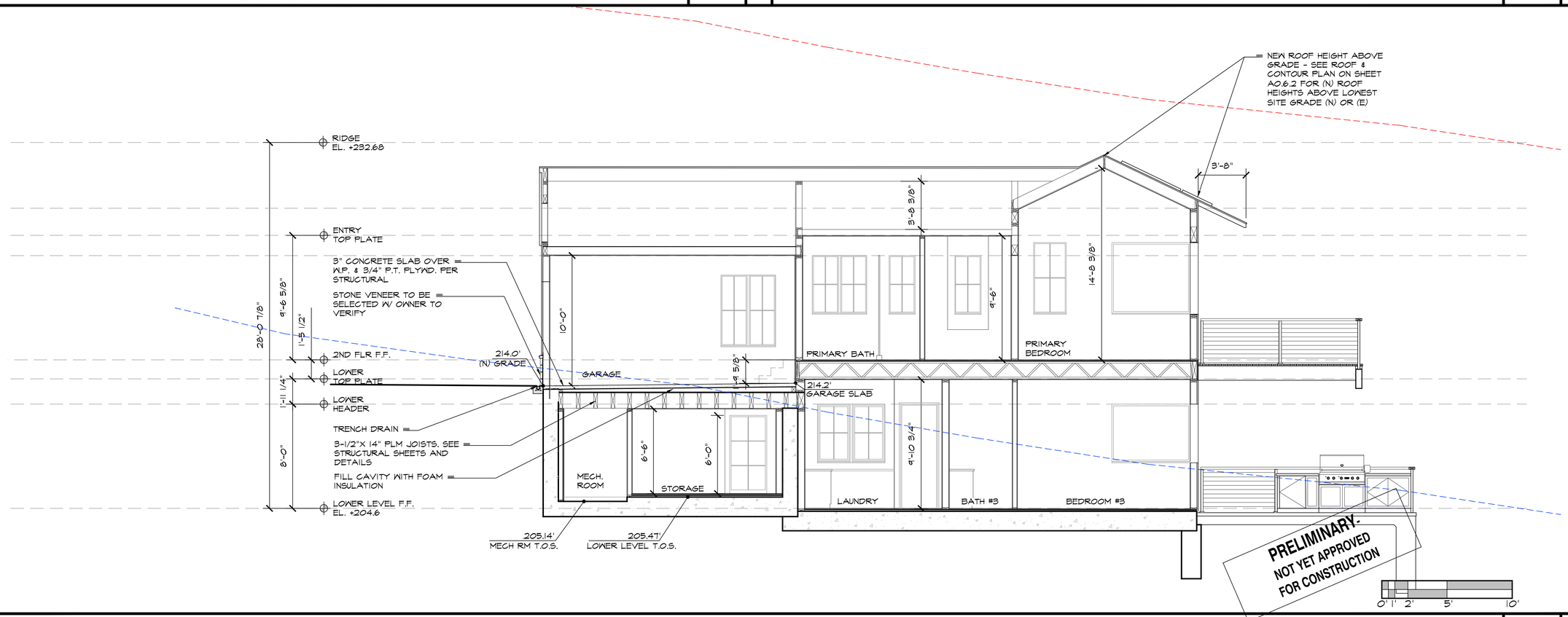

PROPOSED SECTION 1/4" = 1'-0" 1

ISSUE LOG
DESIGN REVIEW SUBMITTAL MAY 20, 2025
DR PLAN CHECK RESUBMITTAL JUL. 15, 2025
DR PLAN CHECK RESUBMITTAL OCT. 03, 2025

LICENSED ARCHITECT ANDREW BERLE YOUNG C-21679 REN. 4-30-26 STATE OF CALIFORNIA

Young & Borlik Architects
4962 EL CAMINO REAL, STE 218
LOS ALTOS, CALIFORNIA 94022
650-688-1950 | YBarchitects.com

NEW RESIDENCE FOR:
ERIN AND EMILY CONLEY
962 HILLCREST DRIVE
REDWOOD CITY, CA 94062

A.P.N. 058-263-040

CHECKED	DRAWN
AEY	OH, MC

DATE SEP. 23. 2024

JOB # CONLEY

A4.2

Copyright 2025 YOUNG AND BORLIK ARCHITECTS INC. All designs, drawings, and written materials appearing herein, are protected and constitute original and unpublished work of the Architect and may not be revised, re-used, copied, or disclosed without the written consent of the Architect. Equipment manufactured by others is excluded. Drawings and specifications are instruments of architectural service, and shall remain the the property of the Architect. Use is restricted to the site for which they are prepared.

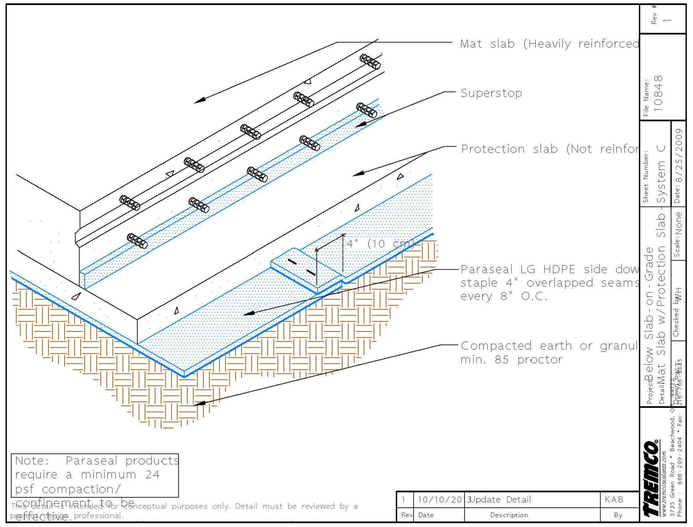

Note: Paraseal products require a minimum 24 psf compaction/ confinement to be effective.

Conceptual purposes only. Detail must be reviewed by a qualified professional.

Rev	Date	Description	By
1	10/10/20	Update Detail	KAB

TREMCO. 3735 Green Road • Beachwood, Ohio 44122 • Fax: 216-292-5000 • Phone: 216-292-5000

Below Slab-on-Grade Paraseal Mat Slab w/Protection Slab System C

File Name: 10848 | Sheet Number: | Date: 8/25/2009 | Scale: None | Checked: WH | Drawn: W.H. | Rev # 1

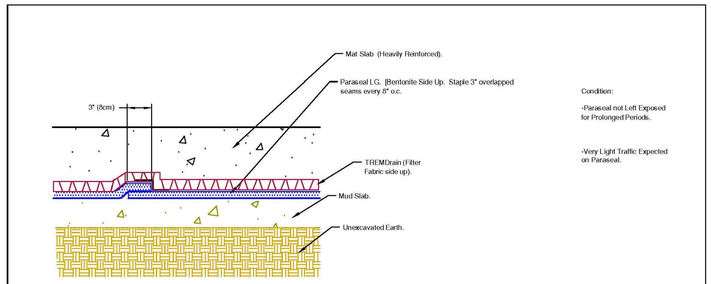

Condition:

-Paraseal not Left Exposed for Prolonged Periods.

-Very Light Traffic Expected on Paraseal.

Note: Paraseal Products require a minimum 24 psf compaction/ confinement to be effective.

Mat Slab with Mud Slab - System D (Also See BSOG-08).

No.	Date	Description	By

TREMCO. 3735 Green Road Beachwood, Ohio 44122 216-292-5000

Project: Below Slab-On-Grade

Drawn by: W. Hensley | Scale: Not To Scale | Date: 01/07/03 | Drawing/Index No.: BSOG-04a

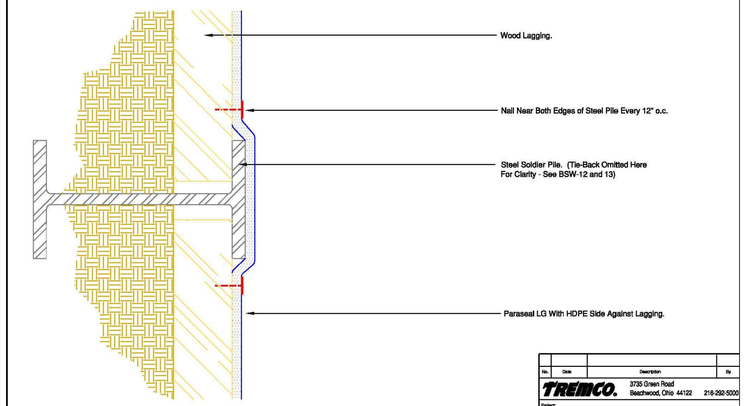

Installing Paraseal LG Directly Over Steel Soldier Pile - Plan View.

No.	Date	Description	By

TREMCO. 3735 Green Road Beachwood, Ohio 44122 216-292-5000

Project: Blindside Walls

Drawn by: J. Davis | Scale: Not To Scale | Date: 06/11/01 | Drawing/Index No.: BSW-08

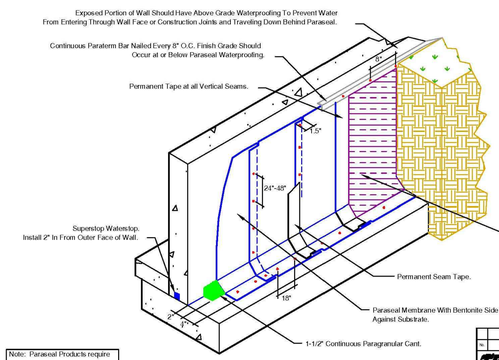

Note: Paraseal Products require a minimum 24 psf compaction/ confinement to be effective.

Paraseal Installation w/ Seams Running Vertically

No.	Date	Description	By

TREMCO. 3735 Green Road Beachwood, Ohio 44122 216-292-5000

Project: Backfilled Walls

Drawn by: W. Hensley | Scale: Not To Scale | Date: 04/04/05 | Drawing/Index No.: BFW-01

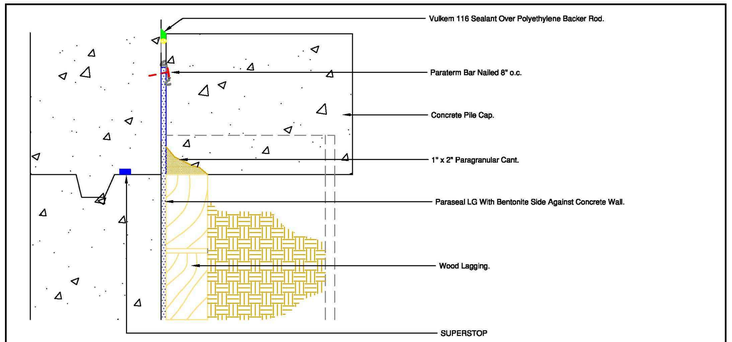

Below Grade Waterproofing. Termination at Grade Line.

No.	Date	Description	By

TREMCO. 3735 Green Road Beachwood, Ohio 44122 216-292-5000

Project: Blindside Walls

Drawn by: A. Murph | Scale: Not To Scale | Date: 4/1/08 | Drawing/Index No.: BSW-19

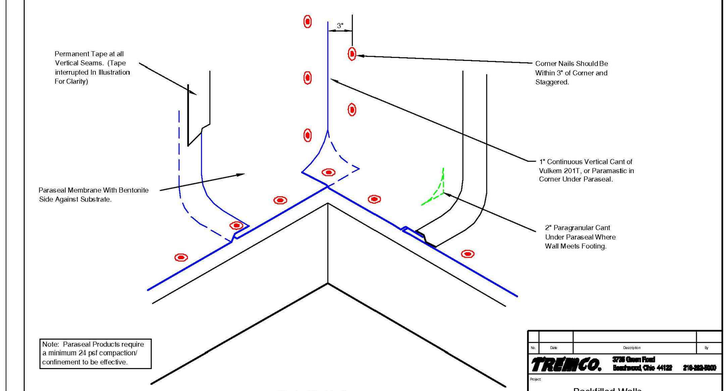

Note: Paraseal Products require a minimum 24 psf compaction/ confinement to be effective.

Typical Inside Corner

No.	Date	Description	By

TREMCO. 3735 Green Road Beachwood, Ohio 44122 216-292-5000

Project: Backfilled Walls

Drawn by: J. Davis | Scale: Not To Scale | Date: 05/02/01 | Drawing/Index No.: BFW-11

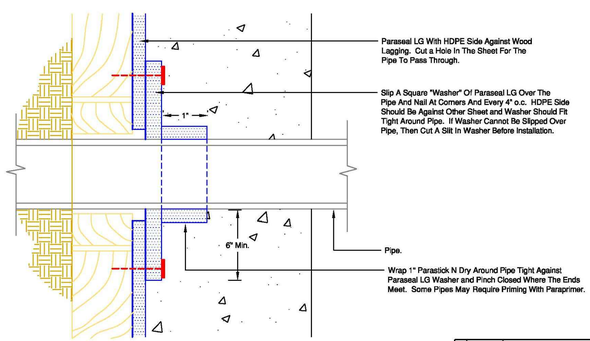

Paraseal LG Installation at Wall Penetration.

No.	Date	Description	By

TREMCO. 3735 Green Road Beachwood, Ohio 44122 216-292-5000

Project: Blindside Walls

Drawn by: J. Davis | Scale: Not To Scale | Date: 06/13/01 | Drawing/Index No.: BSW-17

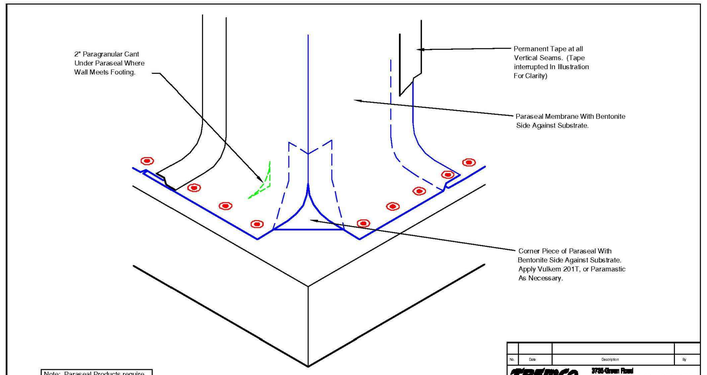

Note: Paraseal Products require a minimum 24 psf compaction/ confinement to be effective.

Typical Outside Corner

No.	Date	Description	By

TREMCO. 3735 Green Road Beachwood, Ohio 44122 216-292-5000

Project: Backfilled Walls

Drawn by: J. Davis | Scale: Not To Scale | Date: 05/02/01 | Drawing/Index No.: BFW-10

NOTE:
DETAILS HERE SHOWN FOR DESIGN INTENT ONLY. WATERPROOF CONTRACTOR TO PROVIDE ALL DETAILS, MATERIALS, SPECIFICATIONS, ETC. FOR PERMITS & CONSTRUCTION/ VERIFY WITH ARCHITECT.

BASEMENT WATERPROOFING SPECIFICATION OR EQ.

ISSUE LOG

DESIGN REVIEW SUBMITTAL MAY 20, 2025
DR PLAN CHECK RESUBMITTAL JUL. 15, 2025
DR PLAN CHECK RESUBMITTAL OCT. 03, 2025

LICENSED ARCHITECT ANDREW BERLE YOUNG C-21679 REN. 4-30-26 STATE OF CALIFORNIA

Young & Borlik Architects
4962 EL CAMINO REAL, STE 218
LOS ALTOS, CALIFORNIA 94022
650-688-1950 | YBarchitects.com

Y&B

NEW RESIDENCE FOR:
ERIN AND EMILY CONLEY
962 HILLCREST DRIVE
REDWOOD CITY, CA 94062

A.P.N. 058-263-040

CHECKED	DRAWN
AEY	OH, MC

DATE SEP. 23. 2024

JOB # CONLEY

A6.1

Copyright 2023 YOUNG AND BORLIK ARCHITECTS INC. All designs, drawings, and written materials appearing herein, are protected and constitute original and unpublished work of the Architect and may not be revised, re-used, copied, or disclosed without the written consent of the Architect. Equipment manufactured by others is excluded. Drawings and specifications are instruments of architectural service, and shall remain the the property of the Architect. Use is restricted to the site for which they are prepared.

AO Smith | COMMERCIAL-GRADE RESIDENTIAL GAS WATER HEATERS

VERTEX™ 96% THERMAL EFFICIENCY
VERSATILE POWER DIRECT VENT

Today's homes demand more hot water than ever before, and the 96% efficient Vertex™ power direct vent gas water heaters offer unprecedented levels of performance to meet the need. The fully condensing Vertex design is so advanced, it can deliver *continuous hot water for shower after shower* at a constant flow of over 4 gallons per minute.*

ENERGY STAR® QUALIFIED

HELICAL INTERNAL HEAT EXCHANGER
- Spiral heat exchanger keeps hot combustion gases in the tank longer to lengthen the heat transfer cycle
- Positioned in the center of the tank for more even heat distribution
- Operates at 96% thermal efficiency, which saves money on operating costs compared to a standard 80% efficient gas water heater

POWER DIRECT VENT DESIGN
- Combined vertical and horizontal runs terminating through an outside wall. Vents using PVC, CPVC, or polypropylene pipe. Canadian installations require ULC S636 approved PVC CPVC or polypropylene pipe for venting.
- 2" pipe, vents up to 45 equivalent feet
- 3" pipe, vents up to 125 equivalent feet

CONDENSING DESIGN
- 96% efficient condensing design
- Equipped with condensate drain tee

SIDE-MOUNTED HOT AND COLD RECIRCULATING TAPS
- Allows Vertex to be installed as part of combination space heating/water heating applications

ADVANCED ELECTRONIC CONTROL
- Large LCD display
- Precise temperature control
- Advanced diagnostics
- iCOMM™ Compatible and can be monitored from remote locations. Call 1.888.WATER02 for more information.

HEAVY-DUTY ANODIC PROTECTION
- Provides even more protection against corrosion

BLUE DIAMOND® GLASS COATING
- Provides superior corrosion resistance compared to industry standard glass lining.

TOP FIRED ULTRA-LOW NOX GAS BURNER
- Enhanced Ultra-low NOx burner complies with SCAQMD Rule 1146.2 and other Air Quality Management Districts with similar requirements for NOx emissions of less than 14 ng/j

CSA CERTIFIED AND ASME RATED T&P RELIEF VALVE

AVAILABLE IN NATURAL GAS OR PROPANE

MAXIMUM HYDROSTATIC WORKING PRESSURE: 150 PSI

CODE COMPLIANCE
- Meets UBC, CEC and ICC National Codes.
- Meets the thermal efficiency and standby loss requirements of the U.S. Department of Energy and current edition of ASHRAE/IES 90.1.

DESIGN-CERTIFIED BY CSA INTERNATIONAL
- Certified at 300 psi test pressure and 150 psi working pressure. Listed according to ANSI Z21.10.3 - CSA 4.3 standards governing storage tank-type water heaters.

6-YEAR LIMITED TANK AND PARTS WARRANTY
- For complete information, consult written warranty or go to hotwater.com

HEAVY-DUTY ANODIC PROTECTION
- Provides even more protection against corrosion

MODEL SHOWN GDHE-75
SERIES 140/141

*Continuous hot water based on 4.31 GPM continuous flow with a 65°F inlet water temperature, 110°F outlet temperature, and a unit installed per the manufacturer's instructions.

AHRI CERTIFIED® www.ahridirectory.org

AO Smith | COMMERCIAL-GRADE RESIDENTIAL GAS WATER HEATERS

Model Number	Nominal Capacity	Rated Storage Volume	First Hour Rating (Gallons)	UEF	Thermal Efficiency	Recovery @ 90° Rise Gallon Per Hour	BTU Input Per Hour	Vent Size	Dimensions in Inches		Approx. Shipping Weight (lbs)
									Height to Top of Heater	Diameter	
GDHE-50	50	49	100	0.88	96%	129	100,000	2 or 3	66-3/4	22	255
GDHE-75	75	74	130	0.86	96%	129	100,000	2 or 3	64-3/4	27-3/4	382

Available in Propane (LP) gas. Specify when ordering Propane (LP) gas.
Models certified for sea level to 10,100 ft. elevation.
Optional Condensate Neutralizer Kit available (Part Number 100112380).

Dimensions for GDHE-50

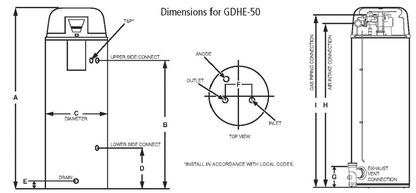

Dimensions for GDHE-75

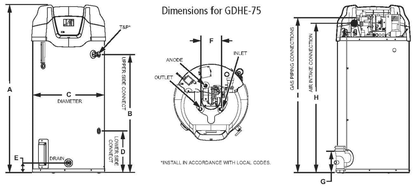

For technical information call 800-527-1953. A. O. Smith Corporation reserves the right to make product changes or improvements without prior notice.

© May 2017 A. O. Smith Corporation. All rights reserved.
www.hotwater.com | 800-527-1953 To:9-Free USA

Page 2 of 2
A05RG45102

TANK WATER HEATER - AO SMITH OR EQ. | 4

FIXED LADDER

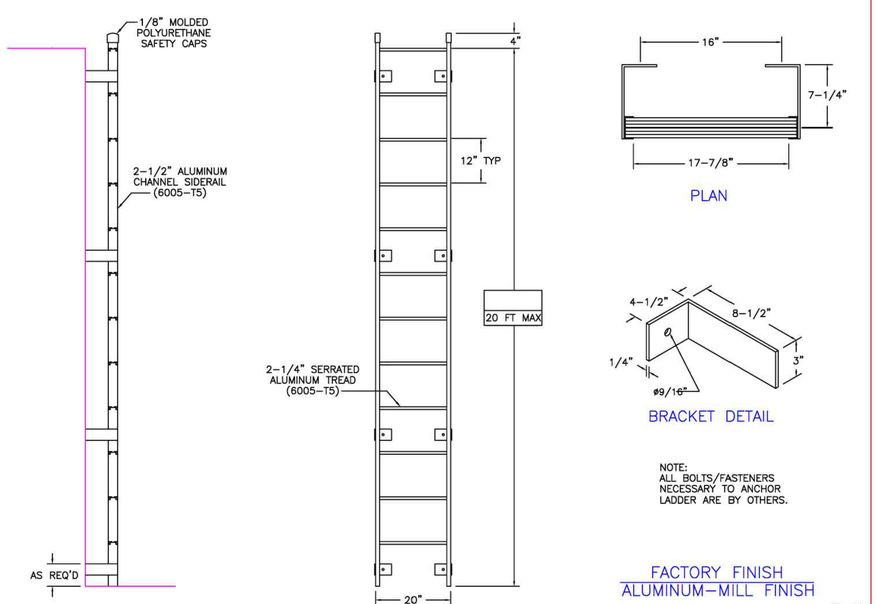

Precision Ladders, LLC
P.O. Box 2279 Morristown, TN 37816-2279
Ph: (423) 586-2265 Fax: (423) 586-2091
www.PrecisionLadders.com

DWG. CHECK	ARCH'T OR ENG'R.	PROJECT		PRECISION REP
BUILT BY:	PURCHASE ORDER	WORK ORDER	PURCHASER	SERIAL#
CHECKED BY:	DRAWN BY: JBR	DATE: 2/22/07	MODEL# FL-	QTY.

FIXED LADDER @ LIGHTWELL SPEC. - PRECISION LADDERS OR EQUAL | 3

nVent NUHEAT Mat

nVent NUHEAT
CONNECT AND PROTECT

Pre-built electric floor heating system

PRODUCT OVERVIEW

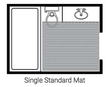

Single Standard Mat

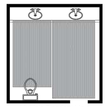

Multiple Standard Mats

Custom Mat

25 YEAR LIMITED WARRANTY | 25 YEAR LIMITED WARRANTY

Pre-built like an electric blanket, nVent NUHEAT Mat is an electric floor heating system that brings soothing heat to the following surfaces:
- Tile
- Stone
- Laminate
- Engineered wood
- Luxury vinyl flooring

nVent NUHEAT Mat is a pre-built floor heating system, meaning it does not require any on-site manipulation during installation. Thinset is applied to the subfloor, the pre-built nVent NUHEAT Mat is pressed onto the thinset, and flooring can be installed immediately. nVent NUHEAT Mat is compatible with all standard subfloor material and is only 1/8 in thick, making it ideal for installations where minimal floor buildup is desired. The pre-built aspect of nVent NUHEAT Mat guarantees even heat distribution as the heating wires are evenly spaced during production.

nVent NUHEAT Mat is available in over 70 nVent NUHEAT Standard Mats (squares and rectangles of various dimensions) off-the-shelf. A single Standard Mat can provide adequate floor heat coverage for most standard bathroom and living areas. Installers can also combine multiple Standard Mats to heat the desired area.

When full coverage cannot be achieved with Standard Mats (example: areas with curves, angles, or obstructions), Custom Mats are available to provide optimal coverage. Custom Mats are made-to-measure and will fit the exact shape of the heated area indicated in submitted drawings. Just like Standard Mats, Custom Mats are pre-built, guaranteeing even heat distribution without cold spots and significantly reducing installation time. Standard and Custom Mats are available for 120 V or 240 V power and produce 12 W/ft². Custom Mats can be configured for 15 W/ft² upon request.

Custom Mats typically ship in 5 to 7 business days. Actual lead time varies and will be confirmed upon quotation and/or order.

KIT CONTENTS

1 nVent NUHEAT Mat floor heating system
1 Installation instruction manual

NVENT NUHEAT STANDARD MAT SELECTION TABLE

120 Volt Standard Mats

	Dimensions (inches)	Ohms	Amps	Watts	Model Number
Shower Mat*	32 x 32	171	0.7	84	FG0307
3.5 ft series	40 x 27	160	0.8	90	F1006
	40 x 32	135	0.9	107	F1008
	40 x 40	108	1.1	133	F1010
	40 x 48	90	1.3	160	F1012
4 ft series	48 x 24	150	0.8	96	F1206
	48 x 30	120	1.0	120	F1208
	48 x 36	100	1.2	144	F1209
	48 x 48	75	1.6	192	F1212
5 ft series	60 x 24	120	1.0	120	F1506
	60 x 30	96	1.3	150	F1508
	60 x 36	80	1.5	180	F1509
	60 x 42	69	1.8	210	F1510
	60 x 48	60	2.0	240	F1512
	60 x 60	48	2.5	300	F1515
6 ft series	72 x 24	100	1.2	144	F1806
	72 x 30	80	1.5	180	F1808
	72 x 36	67	1.8	216	F1809
	72 x 42	57	2.1	252	F1810
	72 x 48	50	2.4	288	F1812
	72 x 60	40	3.0	360	F1815
	72 x 72	33	3.6	432	F1818
7 ft series	84 x 24	86	1.4	168	F2106
	84 x 30	69	1.8	210	F2108
	84 x 36	57	2.1	252	F2109
	84 x 42	49	2.5	294	F2110
	84 x 48	43	2.8	336	F2112
	84 x 60	34	3.5	420	F2115
	84 x 72	29	4.2	504	F2118
	84 x 84	25	4.9	588	F2121

	Dimensions (inches)	Ohms	Amps	Watts	Model Number
8 ft series	96 x 24	75	1.6	192	F2506
	96 x 30	60	2.0	240	F2508
	96 x 36	50	2.4	288	F2509
	96 x 42	43	2.8	336	F2510
	96 x 48	38	3.2	384	F2512
	96 x 60	30	4.0	480	F2515
	96 x 72	25	4.8	576	F2518
	96 x 84	21	5.6	672	F2521
	96 x 96	19	6.4	768	F2525
9 ft series	108 x 24	67	1.8	216	F2706
	108 x 30	53	2.3	270	F2708
	108 x 36	44	2.7	324	F2709
	108 x 42	38	3.2	378	F2710
	108 x 48	33	3.6	432	F2712
	108 x 60	27	4.5	540	F2715
	108 x 72	22	5.4	648	F2718
	108 x 84	19	6.3	756	F2721
	108 x 96	17	7.2	864	F2725
	108 x 108	15	8.1	972	F2727
10 ft series	118 x 24	61	2.0	236	F3006
	118 x 30	49	2.5	295	F3008
	118 x 36	41	3.0	354	F3009
	118 x 42	35	3.4	413	F3010
	118 x 48	31	3.9	472	F3012
	118 x 60	24	4.9	590	F3015
	118 x 72	20	5.9	708	F3018
	118 x 84	17	6.9	826	F3021
	118 x 96	15	7.9	944	F3025
	118 x 108	14	8.9	1062	F3027
	118 x 116	13	9.5	1141	F3030

*The Shower Mat has a 5" center drain hole and exterior dimensions of 32" x 32".

NVENT NUHEAT CUSTOM MAT – ORDERING DETAILS

If desired coverage cannot be obtained using one or a combination of nVent NUHEAT Standard Mats, nVent NUHEAT Custom Mats can provide the desired coverage for any area regardless of shape or size.

1. Provide an accurate drawing of the area including the full on-site perimeter dimensions, voltage, and desired thermostat location with all obstructions identified (vanities, toilets, vents, etc.). Please ensure that the installer or contractor contact information is provided in the event that we need to verify or confirm the dimensions.
2. Submit the drawing to the nVent NUHEAT Customer Care Team at **nuheatinfo@nVent.com**. Customer Care will provide a quote and AutoCAD drawing to confirm the submitted dimensions within 24 hours.
3. Once dimensions are accepted by the customer and payment is confirmed, the nVent NUHEAT Custom Mat will be manufactured within three days and shipped to desired location.

APPROVALS

c UL us *-W" wet rating for Canada as per Table 1 of C22.2 NO.130-16 and CEC section 62-104.

NVENT NUHEAT MAT SPECIFICATIONS

Operating voltage	120 V, 208 V, and 240 V
Power output	12 W/ft² (15 W/ft² when required/specified)
Maximum continuous exposure temperature	194°F (90°C)
Minimum installation temperature	50°F (10°C)
Heating cable	Single wire with ground braid outer layer
Cold lead	2-wire, 18 AWG plus ground braid layer; 10 ft length

ACCESSORIES

	Catalog Number	Description
Signature thermostat	AC0055	WiFi-enabled floor heating thermostat. This programmable thermostat can be controlled using a mobile smart phone app (iOS and Android) or web browser.
Home thermostat	AC0056	Color touchscreen programmable floor heating thermostat with intuitive user interface and energy usage information.
Element thermostat	AC0057	Non-programmable thermostat for simple control of any electric floor heating system.

HEATED ELECTRIC FLOOR MATS - NUHEAT OR EQ. | 2

THERMASOL PROIII-395
PROIII Series Steam Generator

SCAN FOR INSTALLATION GUIDE

SCAN FOR CAD FILES

STANDARD EQUIPMENT
- Lifetime at Factory Warranty (Includes parts and labor)
- 2 year in-home warranty followed by lifetime warranty
- Patented SmartSteam™ on ProSeries™ The most desired feature in steam. Only from ThermaSol.
- Two Way Digital CAN-bus Technology Only from ThermaSol
- Auto PowerFlush™ pressurized inner tank cleaning system
- Superior heating elements - incoloy low watt density
- FastStart™
- 50' CAN-bus cable for the controller
- Works with ThermaSol Serenity Light, Sound, Rainhead
- Split tank design
- Constant steam at a constant rate; no steam lag or burst
- Can be plumbed 50 ft. from the shower without purchasing a larger kW unit
- Stainless steel construction
- Services residential rooms up to 1200 cubic ft. with one steam unit
- Stainless steel drain pan
- Pre-plumbed safety relief valve
- 1/2" union to connect to steam line
- Braided stainless steel water connector

INSTALLATION NOTES:

Install this generator according to the supplied installation guide. Follow local plumbing and electrical codes. Unit must be accessible.

Generator is factory sized: L x W x H = Cubic Feet. Choose the appropriate generator. For every additional foot of ceiling height over 8 ft, use the next larger generator. Always round up when calculating the total cubic feet.

COMPATIBLE OPTIONS:
- Thermatouch Series
- Signatouch Series
- Microtouch Series
- Signature Control Series
- Easy Start Series
- Wellness Packages
- Digital Shower Packages
- Serenity Light and Music series
- Hydrovive series

SPECIFICATIONS:

Input Voltage	208-240VAC Single Phase
Kilowatt Rating	11.0
Maximum Amperage	55 AMPS
Water Inlet	3/8" Compression
Steam Outlet	1/2" NPT
Drain Pan	3/4" NPT
Safety Valve	Pre plumbed
Electrical connection	Hardwired
Maximum Room Size (cubic Feet)	395

PRO SERIES III ULTIMATE

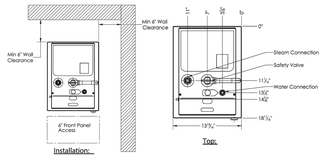

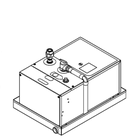

SHIPPING DETAILS

Weight	44 lbs.
Length	18 in.
Width	23 in.
Height	14 in.

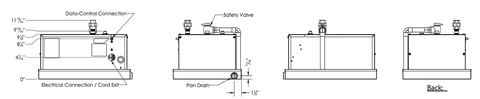

1958 STEAM WAY ROUND ROCK, TX 78665 | PHONE: 800.776.0711 | WWW.THERMASOL.COM PN: 92043-395_A

THERMASOL 65 YEARS

THERMASOL
Pro Series Ultimate with Fast Start, powerflush, and Smart... Steam Generator

STEAM SHOWER SPEC - THERMASOL OR EQ. | 1

ISSUE LOG
DESIGN REVIEW SUBMITTAL MAY 20, 2025
DR PLAN CHECK RESUBMITTAL JUL. 15, 2025
DR PLAN CHECK RESUBMITTAL OCT. 03, 2025

LICENSED ARCHITECT BERLE YOUNG C-21679 REN. 4.30.26 STATE OF CALIFORNIA

Young & Borlik Architects
4962 EL CAMINO REAL, STE 218
LOS ALTOS, CALIFORNIA 94022
650-688-1950 | YBarchitects.com

Y&B

NEW RESIDENCE FOR:
ERIN AND EMILY CONLEY
962 HILLCREST DRIVE
REDWOOD CITY, CA 94062

A.P.N. 058-263-040

CHECKED	DRAWN
AEY	OH, MC

DATE: SEP. 23. 2024
JOB #: CONLEY

A6.2

Copyright 2023 YOUNG AND BORLIK ARCHITECTS INC. All designs, drawings, and written materials appearing herein, are protected and constitute original and unpublished work of the Architect and may not be revised, re-used, copied, or disclosed without the written consent of the Architect. Equipment manufactured by others is excluded. Drawings and specifications are instruments of architectural service, and shall remain the the property of the Architect. Use is restricted to the site for which they are prepared.

Emergence of Solar

Solar power over the past decade has had tremendous growth and shown an immense amount of promise as a viable source for electrical power in the energy grid, especially in residential applications. All across the board, the prices of solar power have been dramatically reducing. In fact, a study by the U.S. Department of Energy states that from 2010 to 2017, the cost of residential photovoltaic (PV) power per watt has decreased by over 60%, and is expected to continue going down. This has led to a vast increase in the amount of solar being deployed.

The Problem

As more and more solar has come into the market, companies focusing on the integrating energy infrastructure in the residential space have struggled with how to handle the new solar technology.

A few solutions have been implemented, but Siemens wants to show you how it is possible to use our products to effectively and efficiently integrate solar into your household. We'll break it down into two main categories:

1 Common solar platforms in the industry

2 Siemens improvement on that platform

1. Common Solar Platforms

Restrictions to Meet for Solar – NEC 705.12

The National Electric Code provides specific requirements to ensure that solar power is safe to use. In order to remain safe, the 2017 NEC states:

"A connection at either end, but not both ends, of a center-fed panelboard in dwellings shall be permitted where the sum of 125 percent of the power source(s) output-circuit current and the rating of the overcurrent device protecting the busbar does not exceed 120 percent of the current rating of the busbar."

– 2017 NEC 705.12(B)(2)(3)(d)

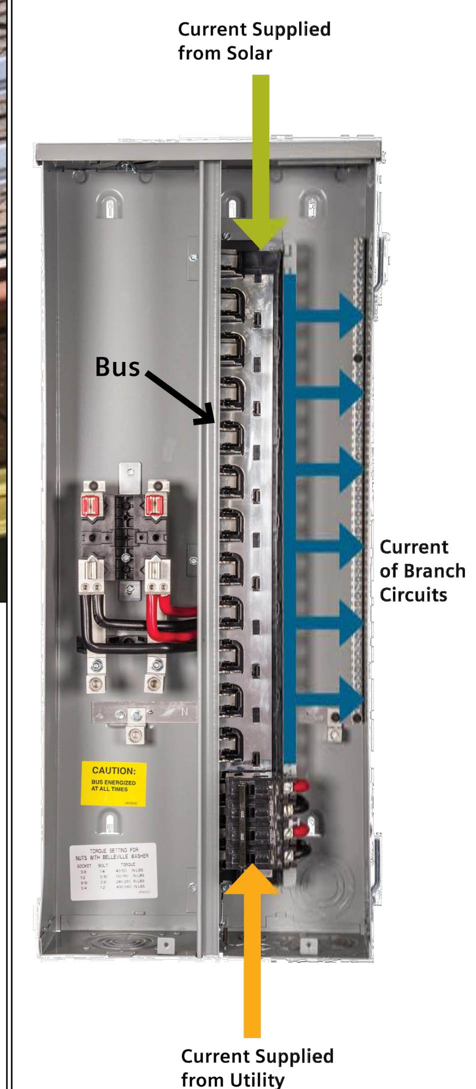

- * Utility current enters the bus via the main breaker
- * Solar current enters the bus via a field installed breaker → We use 125% of current because breakers are rated at 80% current
- * **BOTH** breakers are protecting a **COMMON BUS**, so to make sure the bus does exceed the allowable current, the 120% rule must be taken into account:

(125%)* Current from Solar + Utility Main Breaker Rating ≤ (120%)* Bus Rating

120% Rule = Protecting The Common BUS

Features of Siemens Solutions in Common Platform

- Options **up to 70A** of alternate energy input
- Main breaker located at opposite end of bus from reserved solar input spaces

** Siemens products that meet this solution can be found on page 4 of this brochure*

2. Siemens Improvement

Reaching your System's Full Potential

Siemens has created an innovative solution to meet the needs of this growing market. These "Solar Ready" devices route the alternate power to the supply side of the service disconnecting means and provide terminations to the load side of the meter socket. This eliminates having a common bus and therefore the need to de-rate the main breaker.

While the previously mentioned common solar platforms do meet standards, they have their limitations. For example, installers may be limited with adding as much solar power as their customers would prefer. Many times, the main breaker is required to be de-rated in order to maximize solar power. This consumes valuable branch breaker space since backfeeding the alternate energy breaker onto the bussing is necessary.

Others provide options to connect solar ahead of the service disconnect, but the Siemens solution is factory installed and takes wire bending space into consideration. This simplifies the install process and allows large alternate energy inputs.

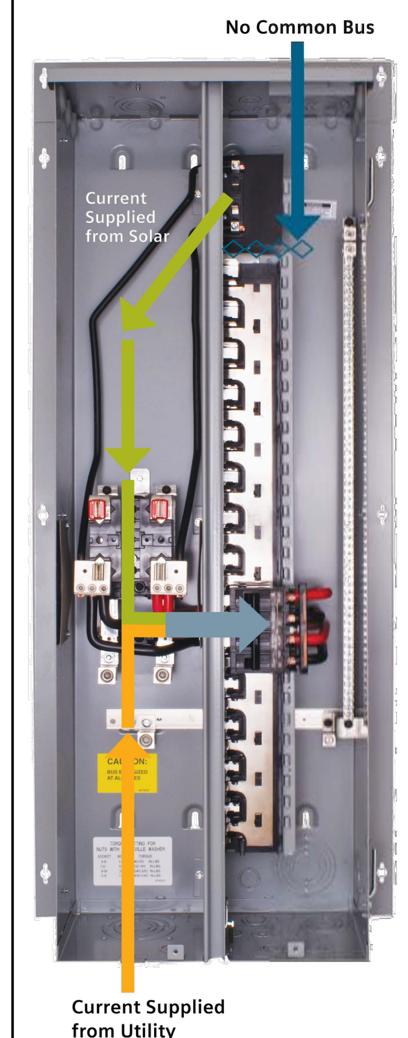

Problems with Common Platforms

- Having to **de-rate main** device in order to safely incorporate solar
- **Lose valuable load space** from solar breaker
- Solar current limited to 120% rule

Features of Siemens Solution

- **Up to 200A** of alternate energy input
- Solar power source is **separate** from busbar and supplied ahead of the service disconnect (**do not** need to worry about 120% rule anymore)
- Do not need to de-rate main breaker
- Does not take up valuable breaker space on the busbar

1 Common Solar Platforms – Siemens Products

40A Max Solar Input
Meter-Load Center Combinations

EUSERC and CA Title 24 Compliant, 1-Phase, 3-Wire, 120/240V AC

MC2040B1200FED

Catalog No.	No. of Spaces	No. of Circuits	Dimensions H	Dimensions W	Dimensions D	Mounting	Feed	Main Breaker Amps	Busbar Rating	Max. PV Input Amps
EUSERC and CA Title 24 Compliant Meter-Load Center Combination, 200A with Alternate Energy Input & Between Studs Width (Side-by-Side Construction)										
MC2040B1200EFC	20	40	32.56	17.3	7.1	Flush	OH/UG	200A	200A	40A
MC2040B1200ESC	20	40	31.06	14.5	5.1	Surface	OH/UG	200A	200A	40A
EUSERC and CA Title 24 Compliant Meter-Load Center Combination, 200A with Alternate Energy Input & Full Load Center Width (Side-by-Side Construction)										
MC3040B1200SECW	30	40	32.34	21.3	5.1	Surface	OH/UG	200A	200A	40A
MC4040B1200SECW	40	40	32.34	21.3	5.1	Surface	OH/UG	200A	200A	40A
EUSERC and CA Title 24 Compliant Meter-Load Center Combination, 200 Amp with Alternate Energy Input (Over/Under Construction)										
MC1212L1200FED	12	12	39.81	17.3	7.0	Flush	UG	200A	200A	40A
MC1212L1200SED	12	12	38.31	14.6	7.0	Surface	UG	200A	200A	40A
MC2040B1200FED	20	40	43.31	17.3	7.0	Flush	UG	200A	200A	40A
MC2040B1200SED	20	40	41.81	14.6	7.0	Surface	UG	200A	200A	40A
MC3042B1200FED	30	42	51.31	17.3	7.0	Flush	UG	200A	200A	40A
MC3042B1200SED	30	42	49.81	14.6	7.0	Surface	UG	200A	200A	40A
MC3042B1225FED	30	42	51.31	17.3	7.0	Flush	UG	225A	225A	40A
MC3042B1225SED	30	42	49.81	14.6	7.0	Surface	UG	225A	225A	40A

70A Max Solar Input
Meter-Load Center Combinations

EUSERC and CA Title 24 Compliant, 1-Phase, 3-Wire, 120/240V AC

MC2442B1200ESV

Catalog No.	No. of Spaces	No. of Circuits	Dimensions H	Dimensions W	Dimensions D	Mounting	Feed	Main Breaker Amps	Busbar Rating	Max. PV Input Amps
EUSERC and CA Title 24 Compliant Meter-Load Center Combination, 200A with Alternate Energy Input & Between Studs Width (Side-by-Side Construction)										
MC2442B1200EFV	24	42	39.81	17.3	7	Flush	OH/UG	200A	225A	70A
MC2442B1200ESV	24	42	35.06	14.5	5.1	Surface	OH/UG	200A	225A	70A

2 Siemens Improvement – Solar Ready Products

60A Max Solar Input
Meter Mains

1-Phase, 3-Wire, 120/240V AC

MM0202S1200H

Catalog No.	No. of Spaces	No. of Circuits	Dimensions H	Dimensions W	Dimensions D	Feed	Bypass Type	Mounting	5th Jaw	Max. PV Input Amps
Meter Mains – Non-EUSERC, 200 Amp with Alternate Energy Input (60A max) and Ring Type Cover (Side-by-Side Construction)										
MM0202S1200H	2	2	19.7	21.3	5.2	OH/UG	None	---	EMC5J	60A
Meter Mains – Non-EUSERC, 200 Amp with Alternate Energy Input (60A max) and Ringless Type Cover (Side-by-Side Construction)										
MM0202S1200RHJ	2	2	19.7	21.3	5.2	OH/UG	None	---	EMC5J	60A
MM0202S1200RJB							Horn	---		

60 - 100A Max Solar Input
Meter-Load Center Combinations

1-Phase, 3-Wire, 120/240V AC

MC2442S1200FC

Catalog No.	No. of Spaces	No. of Circuits	Dimensions H	Dimensions W	Dimensions D	Feed	Bypass Type	Mounting	5th Jaw	Max. PV Input Amps
EUSERC and CA Title 24 Compliant Meter-Load Center Combination, 200 Amp with 60 Amp Alternate Energy Input & Between Studs Width (Side-by-Side Construction)										
MC0816S1200SCT	8	16	40.66	14.5	7	OH/UG	None	Surface	EMC5J	60A
EUSERC and CA Title 24 Compliant Meter-Load Center Combination, 200 Amp with 100 Amp Alternate Energy Input & Between Studs Width (Side-by-Side Construction)										
MC3040S1200SC	30	40	35.68	21.2	5.1	OH/UG	None	Surface	EMC5J	100A
MC4040S1200SC	40	40								
EUSERC and CA Title 24 Compliant Meter-Load Center Combination, 200 Amp with Amp Alternate Energy Input & Between Studs Width (Side-by-Side Construction)										
MC2442S1200SC	24	42	40.66	14.5	7	OH/UG	None	Surface	EMC5J	100A
MC2442S1200FC			42.16	17.3	7			Flush		
Meter-Load Center Combination – Non-EUSERC, 200 Amp with Alternate Energy Input Overhead Feed Only										
MC2040S1200SZ	20	40	32.67	14.3	4.3	OH	None	Surface	EC659-0121	60A
Meter-Load Center Combination – Non-EUSERC, 200 Amp, Lever Bypass with Alternate Energy Input (Over/Under Construction)										
MC2040S1200JLC	20	40	40.1	14.4	5.2	OH/UG	HQ Lever Bypass	Surface	Installed	60A

200A Max Solar Input
Meter-Load Center Combinations

1-Phase, 3-Wire, 120/240V AC

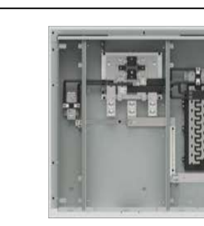
MC3042S1400FCS

Catalog No.	No. of Spaces	No. of Circuits	Dimensions H	Dimensions W	Dimensions D	Feed	Bypass Type	Mounting	5th Jaw	Max. PV Input Amps
Meter-Load Center Combination, 400 Amp, Up to 200 Amp Alternate Energy Input, Lever Bypass										
MC3042S1400SCL	30	42	39.6	39.3	7.5	OH/UG	Lever	Surface	---	200A
MC3042S1400FCL			41.1	42.3	8.5			Flush		
EUSERC and CA Title 24 Compliant Meter-Load Center Combination, 400 Amp, Up to 200 Amp Alternate Energy Input, Manual Bypass										
MC3042S1400SCS	30	42	39.6	39.3	7.5	OH/UG	Manual	Surface	---	200A
MC3042S1400FCS			41.1	42.3	8.5			Flush		
MC3042S1400SDS	30	42	39.6	39.3	7.5	UG	Manual	Surface	---	200A
MC3042S1400FDS			41.1	42.3	8.5			Flush		
EUSERC and CA Title 24 Compliant Meter-Load Center Combination, 400 Amp, Up to 200 Amp Alternate Energy Input										
MC3042S1400SC	30	42	39.6	39.3	7.5	OH/UG	None	Surface	---	200A
MC3042S1400FC			41.1	42.3	8.5			Flush		
MC3042S1400SD	30	42	39.6	39.3	7.5	UG	None	Surface	---	200A
MC3042S1400FD			41.1	42.3	8.5			Flush		

Catalog Number: MC3042S1400SD

Features and Ratings

- Outdoor Enclosure (NEMA Type 3R)
- Ring Type Meter Cover, No Bypass
- Meter Socket Rating: 320A Continuous, 400A Max.
- Panelboard Rating: 400A Max, 1 Phase, 3 Wire, 120/240V~
- (30) 1" Breaker Spaces, (42) Circuits Max.
- 22,000 AIC Max. Rated (See Wiring Diagram for Details)
- Underground Service Only
- Surface Mounting
- Uses HD Type Hubs
- For Photovoltaic or Alternate Energy applications (200A Max.)
- Complies with EUSERC Dwg. No. 302A

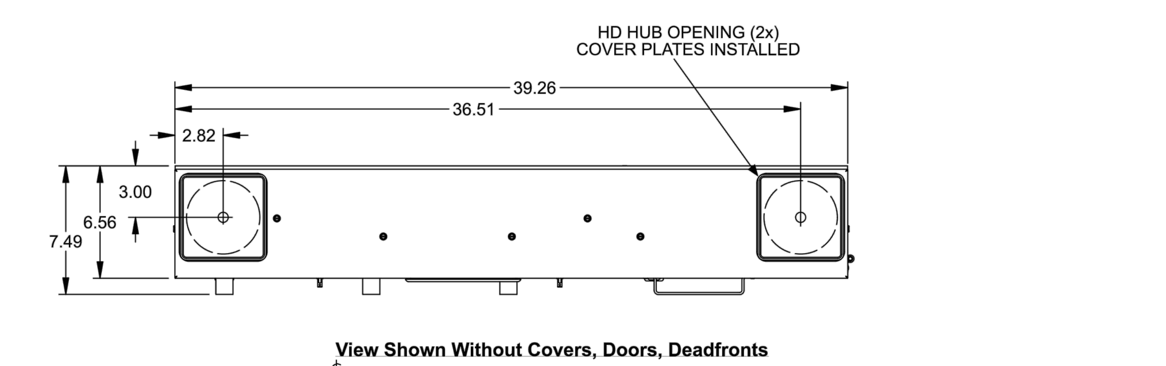

View Shown Without Doors

View Shown Without Covers, Doors, Deadfronts

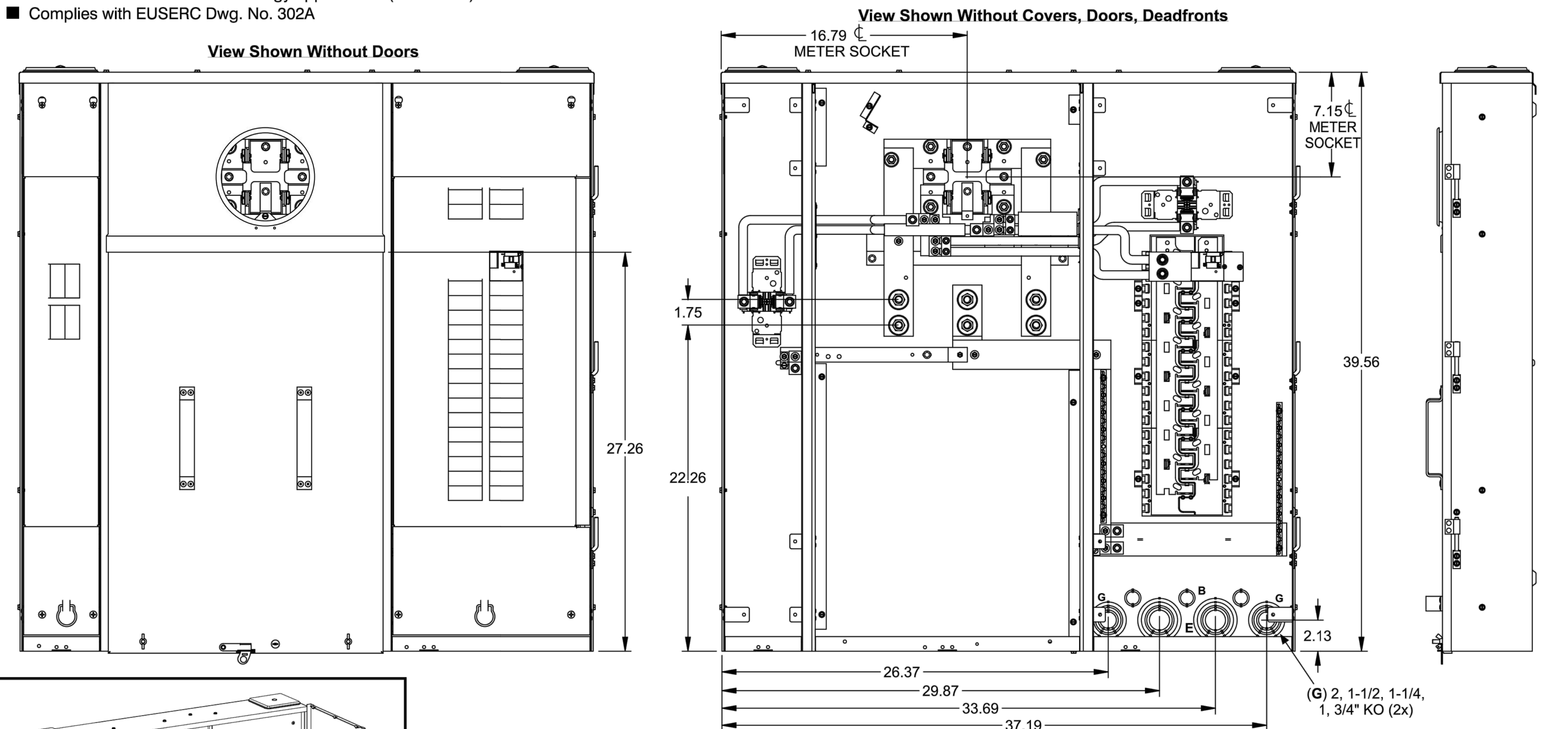

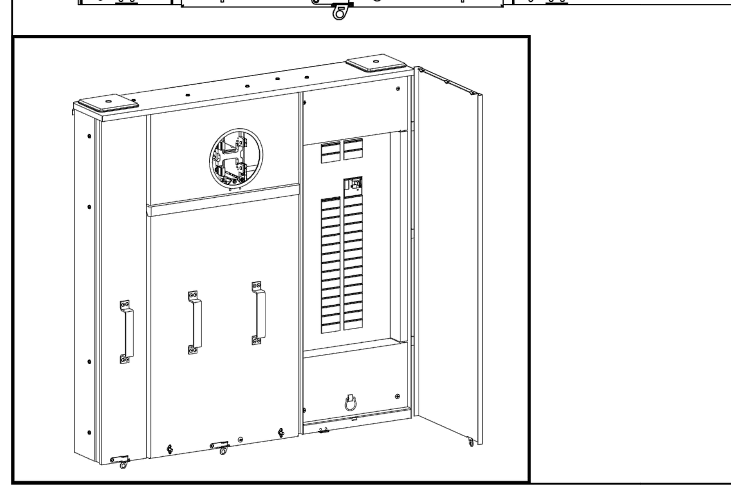

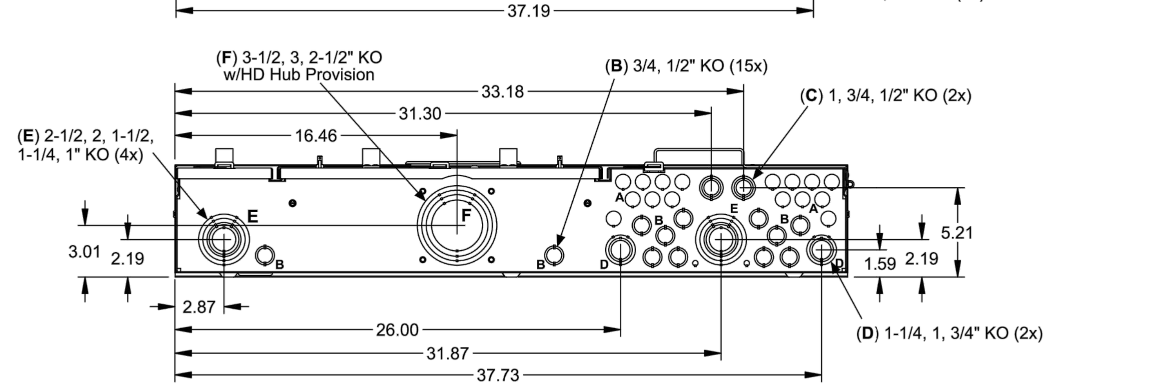

Accessories

If hub is required, use Type HD catalog numbers listed below:

Trade size (in)	Catalog No.
2"	EC56854
2 ½"	EC56855
3"	EC56856
3 ½"	EC56857
4"	EC56858
Closure Plate	EC56933S

Accessory	Catalog No.
Filler Plate	QF3 or ECQF3
200 Amp Main Breaker	QN2200RH
150 Amp Main Breaker	QN2150RH
LUG #6-350 kcmil	SUK350TA
LUG #2-600 kcmil	SUK600TA
IUG 500-1000 kcmil	SUK1000TA
Flush Rail Kit	ECFRK3
Standby Interlock Kit	ECSBPK05
Standby Interlock Kit	ECSBPK07
LUG KIT #2-2/0	ECLK2125
LUG KIT #8-2/0	ECLK2150
LUG KIT #2-300kcmil (200A MAX)	ECLK2225

Torques & Wire Sizes

Load, Neutral and Ground Terminals

Terminal	Wire Size	Torque
A, B, N SUK350TA	(2)#6-350 kcmil	275 lb-in
SUK600TA	#2-600 kcmil	375 lb-in
SUK1000TA	500-1000 kcmil	500 lb-in
N1, N2	300 kcmil - #4	250 lb-in
G1	2/0 - #14	50 lb-in
G2	#2 - #14	50 lb-in
Branch Breaker Terminals	See Markings on Breaker	
NEUTRAL/EQUIP GROUND BAR		
Small Terminals	10 - 14 AWG	20 lb-in
	8 AWG	25 lb-in
	6 AWG	35 lb-in
Large Terminals	10 - 14 AWG	35 lb-in
	8 AWG	40 lb-in
	1/0 - 6 AWG	45 lb-in

Tightening Torques:
5/16" Nuts(1/2" Drive)..........130-140 in-lbs
3/8" Nuts(9/16" Drive)..........240-260 in-lbs
1/2" Nuts(3/4"Drive) ....490-540 in-lbs

Terminal	Wire Size	Torque
NEUTRAL/EQUIP GND*		
Small Terminals	(2) #12-14 CU	20 lb-in
	(2) #12 AL	20 lb-in
Large Terminals	(2 or 3) #12-14 CU	35 lb-in
	(2 or 3) #10-12 AL	35 lb-in
	(2) #10 CU	35 lb-in
	(3) #10 CU	50 lb-in
EQUIPMENT GROUND BAR		
ECGB Series	(1, 2 or 3) #14 CU	20 lb-in
	(1 or 2) #10-12 AL/CU	20 lb-in
	#8 AL/CU	25 lb-in
	#6 - 4 AL/CU	35 lb-in

*Only Equipment Ground Terminals may use more than one wire per terminal.

Schematic

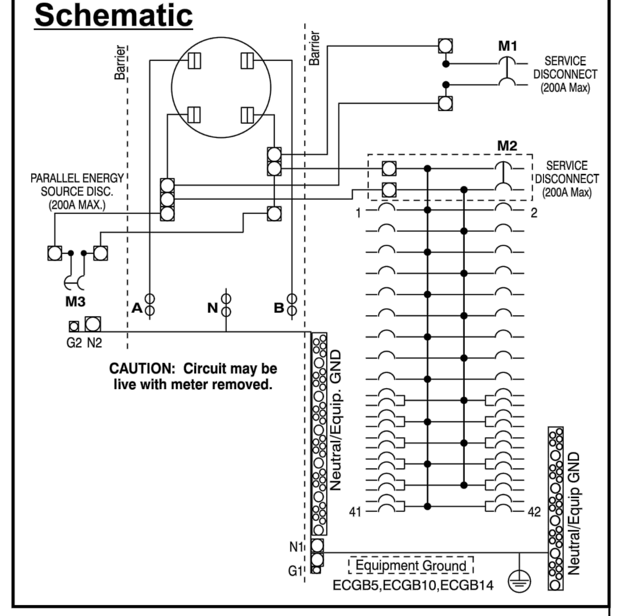

© 2015 Copyright Siemens Industry, Inc.

SIEMENS
Siemens Industry, Inc.

SolarReady™ Meter Combination

Description: **400A, UG, Surf Mount, No Bypass**

KAM 1/18/18 | Fam . | DO NOT SCALE DRAWING | Dwg. No. **MC3042S1400SD**

400A MAIN ELECTRIC PANEL AND SOLAR READY INTEGRATION PRODUCT SPECIFICATION | 1

Copyright 2025 YOUNG AND BORLIK ARCHITECTS INC. All designs, drawings, and written materials appearing herein, are protected and constitute original and unpublished work of the Architect and may not be revised, re-used, copied, or disclosed without the written consent of the Architect. Equipment manufactured by others is excluded. Drawings and specifications are instruments of architectural service, and shall remain the property of the Architect. Use is restricted to the site for which they are prepared.

ISSUE LOG

DESIGN REVIEW SUBMITTAL MAY 20, 2025
DR PLAN CHECK RESUBMITTAL JUL. 15, 2025
DR PLAN CHECK RESUBMITTAL OCT. 03, 2025

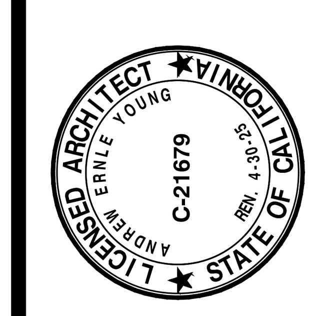

Young & Borlik Architects
4962 EL CAMINO REAL, STE 218
LOS ALTOS, CALIFORNIA 94022
650-688-1950 | YBarchitects.com

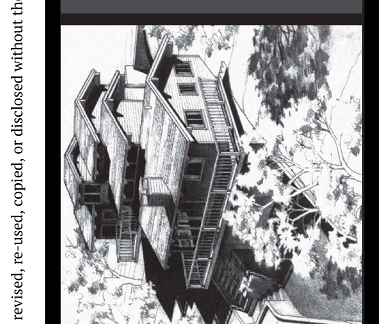

NEW RESIDENCE FOR:
ERIN AND EMILY CONLEY
962 HILLCREST DRIVE
REDWOOD CITY, CA 94062

A.P.N. 058-263-040

CHECKED AEY | DRAWN OH, MC

DATE SEP. 23. 2024

JOB # CONLEY

A6.3

S-5!® The Right Way!®

The concept of combining photovoltaic arrays with standing seam metal roofing is growing—and for good reasons. A standing seam metal roof has a life expectancy consistent with that of framed PV modules—a 30-year power source on a 40-year roof, along with zero-penetration technology, creates the most sustainable roof system available with alternative power generation, all without compromising the roof manufacturer's warranty! PVKIT® 2.0 is also a great solution for attaching PV modules directly to many exposed fastener roofs when paired with S-5! brackets.

S-5! has introduced a new and improved PVKIT, boasting an improved installation experience for PV mounting technology. The kit comes preassembled with either the MidGrab or EdgeGrab for easier and more efficient installation. The kits were designed with thread lock on the standoff bolt so that the grab will seat to the PV Module frame by using one tool to drive the top bolt, eliminating a step required in the previous PVKIT. The PVKIT 2.0 features bonding teeth, which are more aggressive to secure a better ground path. No lugs or wire required except to connect one string of modules to another and to ground the system.

The S-5 PVKIT 2.0 is built to save you time and money — *The Right Way*® to install solar to your metal roof.

PVKIT® 2.0 MidGrab or EdgeGrab

888-825-3432 | www.S-5.com | MADE IN THE USA

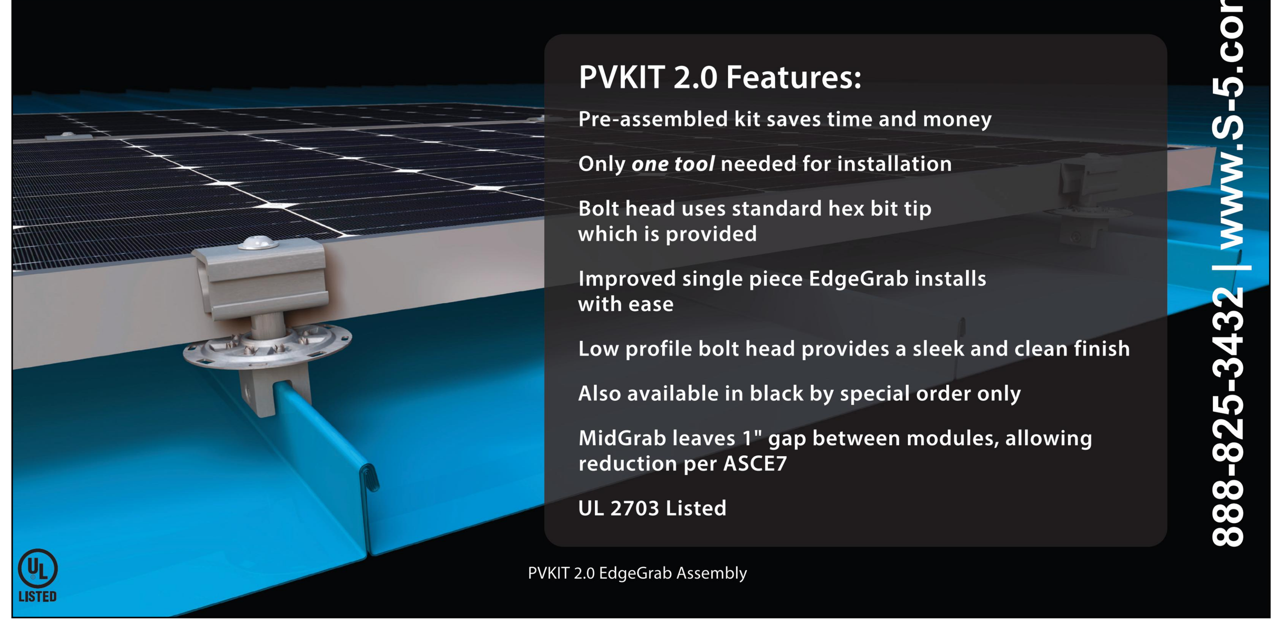

PVKIT 2.0 Features:

- Pre-assembled kit saves time and money
- Only *one tool* needed for installation
- Bolt head uses standard hex bit tip which is provided
- Improved single piece EdgeGrab installs with ease
- Low profile bolt head provides a sleek and clean finish
- Also available in black by special order only
- MidGrab leaves 1" gap between modules, allowing reduction per ASCE7
- UL 2703 Listed

UL LISTED

PVKIT 2.0 EdgeGrab Assembly

S-5!® The Right Way!®

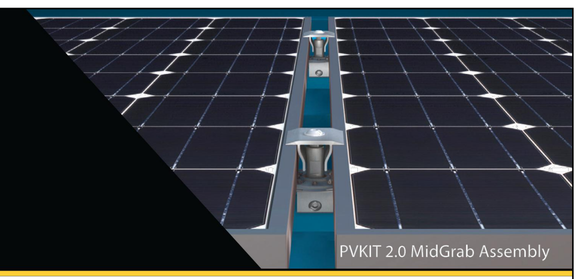

PVKIT 2.0 MidGrab Assembly

PVKIT® 2.0: New Design

UL LISTED

The PVKIT 2.0 is furnished with the hardware shown at right, excluding the attachment clamp, which is supplied separately. The PVKIT 2.0 is compatible with most common metal roofing materials, including copper.

The Module Placement Bevel Guide makes the module placement easier. The mounting disk is multi-directional and rails are not required. The PV grab ears, holding the solar panels in place, are broader to allow for ease of installation and precise module engagement.

Accommodating module thicknesses between 30 and 46mm, the PVKIT 2.0 fits the majority of solar panels on the market. Using the S-5! mini clamps, it fits most standing seam metal roofs. When paired with other S-5! products, the PVKIT 2.0 and EdgeGrab or MidGrab will also work on most exposed fastener including corrugated metal roofs. The MidGrab is designed to fit mid conditions (two adjacent panels), while the new EdgeGrab is designed specifically for end conditions.

Wind dynamics are complex; thus, each system should be reviewed by a qualified licensed professional who understands wind effects prior to purchase and installation. For more detailed information including specifications, installation instructions, and CAD drawings, visit www.S-5.com or your PVKIT 2.0 distributor.

The PVKIT 2.0 continues to be the easiest, most cost-effective way to install solar panels directly to standing seam and exposed fastener metal roofs, remaining the most popular choice worldwide.

PVKIT 2.0 EdgeGrab

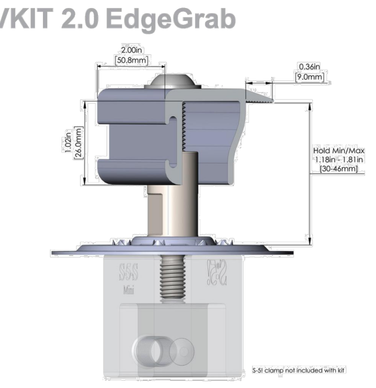

PVKIT 2.0 MidGrab

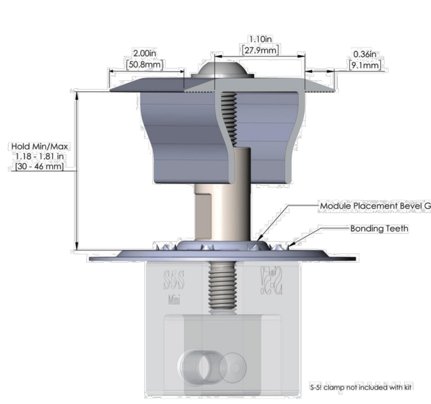

Certain components featured in illustration may not be UL listed. Due to the variety of attachment needs, S-5-PVKIT 2.0 are sold separately from S-5! clamps.

S-5!® Warning! Please use this product responsibly!

The independent lab test data found at www.S-5.com can be used for load-critical designs and applications.

Products are protected by multiple U.S. and foreign patents. For published data regarding holding strength, fastener torque, patents, and trademarks, visit the S-5! website at www.S-5.com. Copyright 2021, Metal Roof Innovations, Ltd. S-5! products are patent protected.

Copyright 2021, Metal Roof Innovations, Ltd. Version 081221

Distributed by:

SOLAR PANEL ATTACHMENT CLIPS FOR STANDING SEAM METAL ROOF - S-5! OR EQ. | 4

Viewrail Signature Posts

Tech Specifications

Material: 6061 Aluminum (Aircraft Grade), 304 SS, 2205 SS

Finishes: Custom powder coated to order or brushed stainless

Height: Up to 42" Tall (System Height)

Standard Spacing: 4' on center

Mount Type: Core Drilled, Surface Mount, Special Application, Side Mount or Bump Out

Post Size: 2" X 2" Tube

Infill Options: Cable, 2205 Rods, or Glass

Compliance: *ICC, IBC International Building Code® (2015,2018,2021), IRC International Residential Code® (2015, 2018, 2021)*

2

Mounting Styles

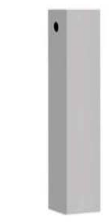

Core Drill
The Core drill post is designed to be plunged into concrete. The post is 6 1/4" long at the base.

Surface Mount
The Surface Mount post plate is the flagship post product. It sits on a 3.75" X 3.75" plate and is used for a majority of surface mount projects.

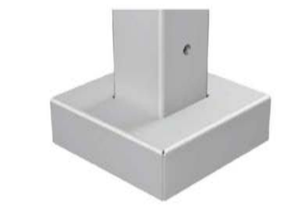

Special Application
The special application post foot plate was designed to be mounted on solid surfaces like concrete or stone. The footplate is 4.5" X 4.5".

Side Mount Post
The standard side mount post sits on a 6" X 5-1/2" plate. Depending on the post composition the plate ranges from .3125" to .375" thick. The aluminum is a bolt together style and the stainless is welded on.

Slim Side Mount
The slim side mount post was designed similar to the standard side mount post but with a minimal footprint. The aluminum is a bolt together that sticks.

Bump Out Side Mount
The bump out side mount post was designed to go around deeper fascias. The mounting plate is 2" deep and 6" tall.

Post Top Styles

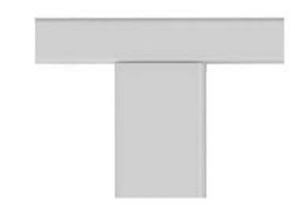

Flat Top Post

Universal Top Post

3

CABLE GUARDRAIL SPECS. OR EQUAL | 2

WALL SCONCE
CYLINDER & SQUILINDER®

PROJECT NAME:	TYPE:

Exceptional adaptability and performance in classic and modern silhouettes that mount seamlessly and invisibly to the wall.

ORDERING INFORMATION

T24 JA8-2022 INDICATED BY SHADING

SHAPE	TYPE	RATING	BODY FINISH	BAFFLE FINISH	CRI / WATTAGE PACKAGE	CCT	LOWER OPTIC (UGR)	UPPER OPTIC (UGR)	DRIVER	LOWER MEDIA	UPPER MEDIA
		2									
CW2 Cylinder SW2 Squilinder	DF Downlight UD Up / Downlight	2 Wet (IP65)	WH White AG Satin Silver AU Cashmere Gold BB Burnt Bronze AB Architectural Bronze BK Black CF Custom Finish* *(Consult Factory)	WH White AG Satin Silver AU Cashmere Gold BB Burnt Bronze AB Architectural Bronze BK Black CF Custom Finish* *(Consult Factory)	DOWNLIGHT (DF) STATIC WHITE 80S11A 80+ CRI, 11W, Lm. Delivered - 1232 80S17A 80+ CRI, 17W, Lm. Delivered - 1893 80S23A 80+ CRI, 23W, Lm. Delivered - 2470 90S11A 90+ CRI, 11W, Lm. Delivered - 1028 90S17A 90+ CRI, 17W, Lm. Delivered - 1626 90S23A 90+ CRI, 23W, Lm. Delivered - 2122 97S11A 97+ CRI, 11W, Lm. Delivered - 929 97S17A 97+ CRI, 17W, Lm. Delivered - 1428 97S23A 97+ CRI, 23W, Lm. Delivered - 1863	24 2400K* *(90+CRI only) 27 2700K 30 3000K 35 3500K 40 4000K	15 15° (<13) 20 20° (<10) 25 25° (<10) 40 40° (<10) 60 60° (<16)	00 DF Only* *(Required with DF fixture)	DOWNLIGHT (DF) INTEGRAL PH2 120V, 1% Forward/Reverse SG2 120-277V, 1% 0-10V, LOG SN2 120-277V, 1% 0-10V, LIN REMOTE (120V) TR2 Philips, 2% Forward/Reverse UP / DOWNLIGHT (UD) INTEGRAL CA3 120-277V, 2% 0-10V Analog Logarithmic CE3 120V, 2% Forward/Reverse REMOTE (120-277V) LH1 Lutron, Hi-Lume 1% Ecosystem AN4 Philips Xitanium 1% 0-10V, LOG EA2 eldoLED, SOLOdrive 0.1% 0-10V, LOG ED1 eldoLED, SOLOdrive 0.1% DALI, LOG AS1/ ASR Athena Control eldoLED, SOLOdrive 0.1% 120-277V* CS1/ CSR Casambi Control eldoLED, SOLOdrive 0.1% 120-277V* *(Includes Node. Extended lead time, consult factory. ASR/CSR includes shunt)	3 Clear Glass Lens* *(Not available for Warm Dim) 4 Soft Focus Lens 5 Frosted Glass Lens 6 Frosted Soft Focus Lens 7 Frosted Linear Spread Lens* *(Not available for Squilinder)	9 Diffusion Lens* *(Required with UD fixture) LEAVE BLANK FOR DOWNLIGHT (DF)
					DOWNLIGHT (DF) WARM DIM 90W18A 90+ CRI, 18W Incandescent Profile 2700K - 1800K Lm. Delivered - 1099 Halogen Profile 3000K - 1800K Lm. Delivered - 1113 *SEE PAGE 3 FOR DETAILED WARM DIM PROFILE COMPARISON.	WL 2700K - 1800K WD 3000K - 1800K	20 20° (<10) 25 25° (<10) 40 40° (<10) 60 60° (<13)	00 DF Only* *(Required with DF fixture)			
					UP / DOWNLIGHT (UD) STATIC WHITE 80S11A 80+ CRI, 11W, Lm. Delivered - 1271 90S11A 90+ CRI, 11W, Lm. Delivered - 1092 97S11A 97+ CRI, 11W, Lm. Delivered - 959 *ALL DELIVERED LUMEN OUTPUTS AND T24 COMPLIANCE REFLECT 3000K PAIRED WITH 20° OPTIC AND SOFT FOCUS LENS.	24 2400K* *(90+CRI only) 27 2700K 30 3000K 35 3500K 40 4000K	15 15° (<13) 20 20° (<10) 25 25° (<10) 40 40° (<10) 60 60° (<16) SEE PAGE 3 FOR UGR RATINGS	15 15° (<16) 20 20° (<13) 25 25° (<13) 40 40° (<13) 60 60° (<13) SEE PAGE 3 FOR UGR RATINGS			

(WH) White Powder Coat | (AG) Satin Silver Powder Coat | (AU) Cashmere Gold Powder Coat | (BB) Burnt Bronze Powder Coat | (AB) Architectural Bronze Powder Coat | (BK) Black Powder Coat

PART NUMBER NOTES
- Wall Sconce (ex.) CW2-DF2-WHBK-90S23A2-30-PH2-40
- Up / Downlight (UD) fixtures require two remote drivers
- Remote driver(s) ships as (ex.) PS-RMT-80S11A-1TR2

WALL SCONCE

CYLINDER

A LUMINAIRE
Machined aluminum body with integrated heat sink and LED; power supply may be integral or remote mount.

B LOWER OPTIC
Robust light engine with optimized optic pairing integrates Reflection, refraction, TIR offering 15°, 20°, 25°, 40° & 60° beams.

C LOWER MEDIA
Cylinder baffle lens assembly can accept 1 lens sealed in place. Soft focus lens included as standard for lens. Suction tool provided for removal of baffle lens assembly.

D UPPER MEDIA
Cylinder assembly can accept 1 lens sealed in place. Diffusion lens included as standard for lens.

E UPPER OPTIC
Robust light engine with optimized optic pairing integrates Reflection, refraction, TIR offering 15°, 20°, 25°, 40° & 60° beams.

MOUNTING

F MOUNTING PLATE
Mounting plate (concealed) with factory supplied hidden screws after wall is fully finished. Single-gang junction box required for mounting. Fixture to mount flush with minimalist transition to wall.

REMOTE POWER SUPPLY

G PS-RMT
Remote power supply provides additional driver options. Consult installation guide for maximum allowable secondary run lengths between PS-RMT and fixture. Must be installed in an accessible location.

H ATHENA / CASAMBI CONTROL
Controls integrated into housing or remote driver assembly. All equipment is serviceable.

Athena Model Numbers: A-WN-D01-RF-BL & DFC-OEM-DBI

Casambi Model Number: BT-S1E1-5400

I ATHENA / CASAMBI EM SHUNT
Inlcuded with drivers specified as ASR, ADR, CSR, or CDR. One required for each wireless EM fixture, requires class 2 control wiring between fixture and shunt. Features integrated test switch.

Model Number: PS-RMT-SHUNT

DIMENSIONS / DRAWINGS

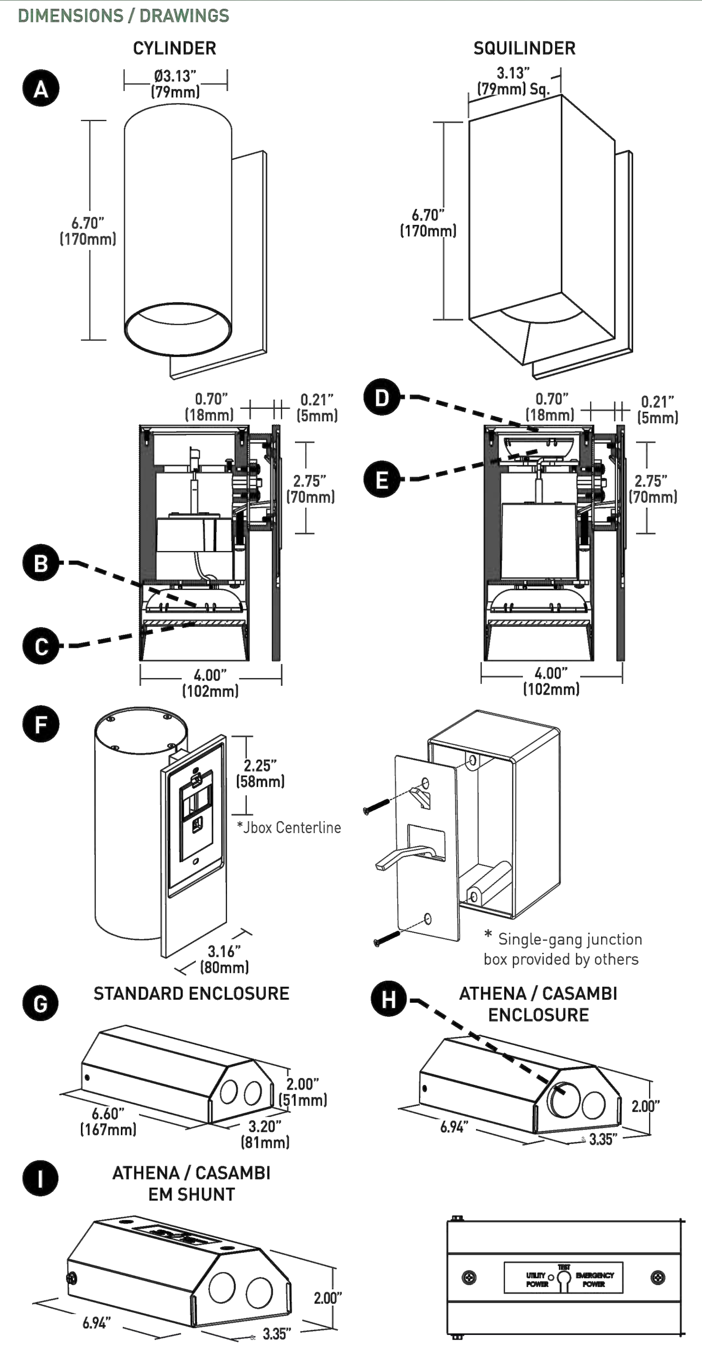

EXTERIOR DOWNLIGHT SCONCE LIGHTS - LUCIFER LIGHTING COMPANY OR EQ. | 5

fiberondecking.com/pages/fire-resistant-decking?srsltid=AfmBOopLEO0bccUHvNCFYQnR_bNShjKypInzOkvfkybxXdZsX64YAwVI

Composite decking fire ratings are determined through standardized testing, such as the ASTM E84 test, which measures flame spread and smoke development. In wildfire-prone areas, additional regulations like Wildland-Urban Interface (WUI) requirements may apply.

Fire Rating Classes for Composite Decking

Deck fire ratings classify materials based on how they respond to fire.

- **Class A Fire-Rated Decking:** The highest level of fire resistance, meaning the material slows flame spread the most and provides the strongest defense against fire.
- **Class B Fire-Rated Decking:** Moderate fire resistance, making it a good option for areas with some fire risk but without the higher requirements of Class A.
- **Class C Fire-Rated Decking:** The lowest level of protection among fire-rated materials but still provides a level of defense in environments where fire risk is lower.

The Wildland Urban Interface

The WUI is an area where homes and communities meet undeveloped land, making them more vulnerable to wildfires. Because of this, certain building materials — like composite decking — need to meet fire resistance standards to help reduce risk. Fiberon offers WUI compliant decking that has been tested and approved for use in WUI zones.

WUI compliance isn't one-size-fits-all. Requirements vary by location, as well as local and state regulations created based on an area's wildfire risks. For more information about Fiberon's fire-rated decking testing and ratings, please see our Fire-Rated Decking Guide.

FIRE RATED DECKING SPECS. OR EQUAL | 1

Copyright 2025 YOUNG AND BORLIK ARCHITECTS INC. All designs, drawings, and written materials appearing herein, are protected and constitute original and unpublished work of the Architect and may not be revised, re-used, copied, or disclosed without the written consent of the Architect. Equipment manufactured by others is excluded. Drawings and specifications are instruments of architectural service, and shall remain the the property of the Architect. Use is restricted to the site for which they are prepared.

ISSUE LOG
DESIGN REVIEW SUBMITTAL MAY 20, 2025
DR PLAN CHECK RESUBMITTAL JUL. 15, 2025
DR PLAN CHECK RESUBMITTAL OCT. 03, 2025

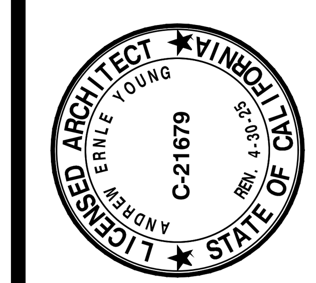

Young & Borlik Architects
4962 EL CAMINO REAL, STE 218
LOS ALTOS, CALIFORNIA 94022
650-688-1950 | YBarchitects.com

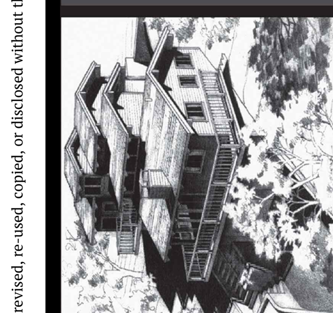

NEW RESIDENCE FOR:
ERIN AND EMILY CONLEY
962 HILLCREST DRIVE
REDWOOD CITY, CA 94062

A.P.N. 058-263-040

CHECKED	DRAWN
AEY	OH, MC
DATE	SEP. 23. 2024
JOB #	CONLEY

A6.4

ARCHITECTURAL SPECIFICATIONS
PANASONIC ADVANCED VENTILATION SERIES

WhisperGreenSelect™ VENTILATION FAN

CEILING MOUNTED VENTILATION FANS

FV-05-11VK1 WhisperGreen Select™ – 50-80-110 CFM Fan, Ceiling Mount, Single Speed
Customizable Ventilation Fan shall be ceiling mount, ENERGY STAR® rated type with built-in speed selector. Select from 50/80/110 CFM and no more than <0.3 sone as certified by the Home Ventilating Institute (HVI) at 0.1 w.g. with no less than 53/82/113 CFM and no more than 0.3/0.4/0.8 sones at .25 w.g. Power Consumption shall be no greater than 3.5/5.5/9.8 watts at 0.1 w.g. and 15.1/15.3/11.5 watts at 0.25 w.g. ENERGY STAR® rated with efficiency of no less than 15.1/15.3/11.5 CFM/watt at 0.1 w.g. and than 8.1/8.4/7.2 CFM/watt at 0.25 w.g. The motor shall be enclosed with brushless DC motor engineered to run continuously. DC motor speed shall automatically increase when the fan senses static pressure to maintain selected CFM. Power rating shall be 120v/60Hz. Duct diameter shall be no less than 4", inclusive of an integrated dual 4" or 6" duct adapter. **Plug 'N Play™ modules** provide up to three additional features. Select from Multi-Speed with Time Delay, Condensation Sensor, LED Night Light and Motion Sensor. Fan shall be UL and cUL listed for tub/shower enclosure when used with a GFCI protected circuit. Fan can be used to comply with ASHRAE 62.2, LEED, ENERGY STAR® IAP, EarthCraft, California Title-24 and WA Ventilation Code.

FV-05-11VKS1 WhisperGreen Select™ – 50-80-110 CFM Fan, Ceiling Mount, Built-in Multi-Speed control
Customizable Ventilation Fan shall be ceiling mount, ENERGY STAR® rated type with **Multi-speed control** (0, 30-100 CFM, in 10 CFM increments) that shall be **built-in** with a high/low adjustable delay timer and activated by a wall switch, Motion Sensor Plug 'N Play™ module or Condensation Sensor Plug 'N Play™ module. Features a built-in speed selector. Select from 50/80/110 CFM and no more than <0.3 sone as certified by the Home Ventilating Institute (HVI) at 0.1 w.g. with no less than 53/82/113 CFM and no more than 0.3/0.4/0.8 sones at .25 w.g. Power Consumption shall be no greater than 3.5/5.5/9.8 watts at 0.1 w.g. and 7.0/10.2/16.1 watts at 0.25 w.g. ENERGY STAR® rated with efficiency of no less than 15.1/15.3/11.5 CFM/watt at 0.1 w.g. and than 8.1/8.4/7.2 CFM/watt at 0.25 w.g. The motor shall be enclosed with brushless DC motor engineered to run continuously. DC motor speed shall automatically increase when the fan senses static pressure to maintain selected CFM. Power rating shall be 120v/60Hz. Duct diameter shall be no less than 4", inclusive of an integrated dual 4" or 6" duct adapter. **Plug 'N Play™ modules** provide up to **two** additional features. Select from Condensation Sensor, LED Night Light and Motion Sensor. Fan shall be UL and cUL listed for tub/shower enclosure when used with a GFCI protected circuit. Fan can be used to comply with ASHRAE 62.2, LEED, ENERGY STAR®, IAP, EarthCraft, California Title-24 and WA Ventilation Code.

FAN FOR IN-DOOR AIR QUALITY — N.T.S. — 7

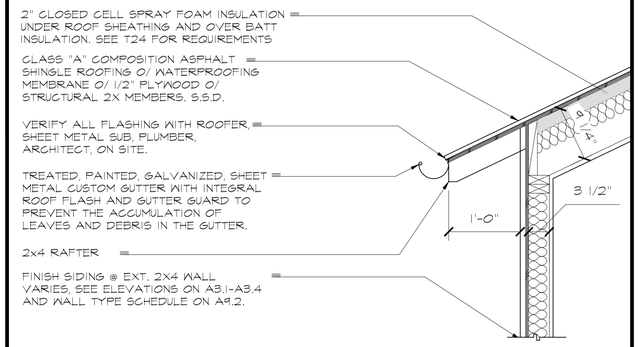

TYP. EAVE DETAIL — 1" = 1'-0" — 5

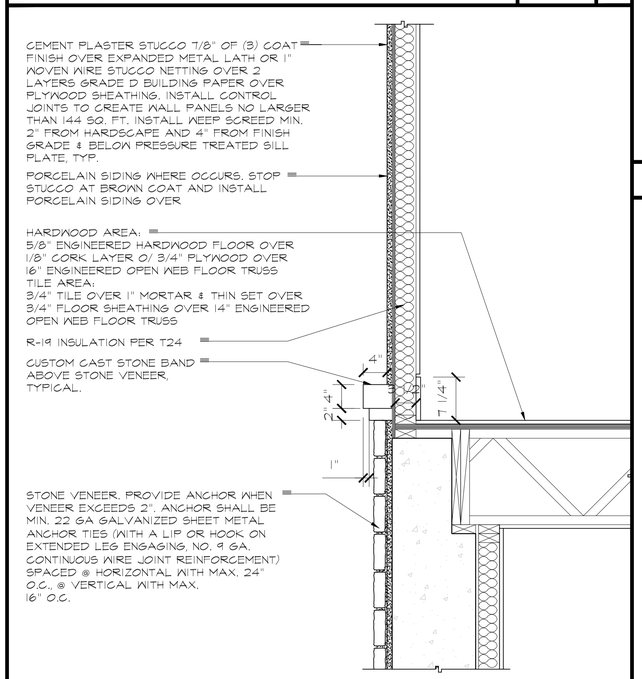

TYP. EXT. STONE WAINSCOT DETAIL — 1" = 1'-0" — 4

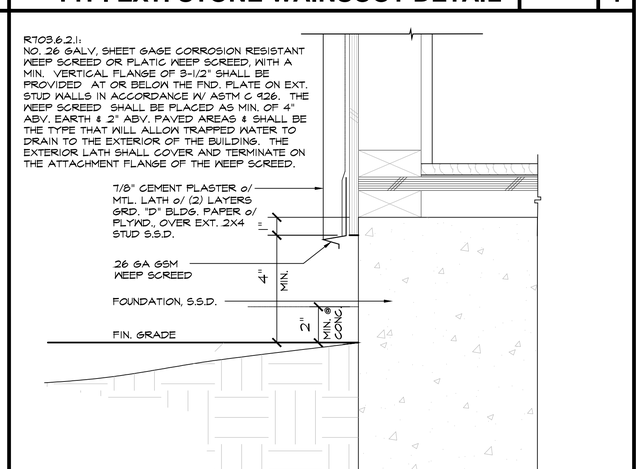

TYP. EXTERIOR WALL @ FOUNDATION — 3" = 1'-0" — 3

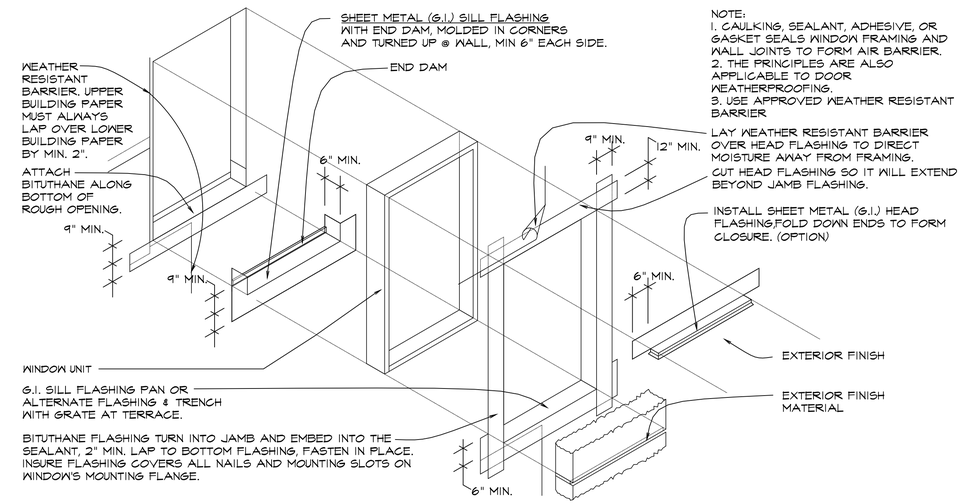

NOTE:
1. CAULKING, SEALANT, ADHESIVE, OR GASKET SEALS WINDOW FRAMING AND WALL JOINTS TO FORM AIR BARRIER.
2. THE PRINCIPLES ARE ALSO APPLICABLE TO DOOR WEATHERPROOFING.
3. USE APPROVED WEATHER RESISTANT BARRIER

DOOR AND WINDOW WEATHERPROOFING — 1" = 1'-0" — 2

ISSUE LOG

DESIGN REVIEW SUBMITTAL MAY 20, 2025
DR PLAN CHECK RESUBMITTAL JUL. 15, 2025
DR PLAN CHECK RESUBMITTAL OCT. 03, 2025

LICENSED ARCHITECT ANDREW EARLE YOUNG C-21679 REN. 4-30-26 STATE OF CALIFORNIA

Young & Borlik Architects
4962 EL CAMINO REAL, STE 218
LOS ALTOS, CALIFORNIA 94022
650-688-1950 | YBarchitects.com

Y&B

NEW RESIDENCE FOR:
ERIN AND EMILY CONLEY
962 HILLCREST DRIVE
REDWOOD CITY, CA 94062

A.P.N. 058-263-040

CHECKED	DRAWN
AEY	OH, MC

DATE SEP. 23. 2024

JOB # CONLEY

A8.1

Copyright 2025 YOUNG AND BORLIK ARCHITECTS INC. All designs, drawings, and written materials appearing herein, are protected and constitute original and unpublished work of the Architect and may not be revised, re-used, copied, or disclosed without the written consent of the Architect. Equipment manufactured by others is excluded. Drawings and specifications are instruments of architectural service, and shall remain the the property of the Architect. Use is restricted to the site for which they are prepared.

TABLE 4.504.5
FORMALDEHYDE LIMITS[1]
Maximum Formaldehyde Emissions in Parts per Million

PRODUCT	CURRENT LIMIT
Hardwood plywood veneer core	0.05
Hardwood plywood composite core	0.05
Particleboard	0.09
Medium density fiberboard	0.11
Thin medium density fiberboard[2]	0.13

1. Values in this table are derived from those specified by the California Air Resources Board, Air Toxics Control Measure for Composite Wood as tested in accordance with ASTM E1333. For additional information, see *California Code of Regulations*, Title 17, Sections 93120 through 93120.12.

TABLE 4.504.1
ADHESIVE VOC LIMIT[1, 2]
Less Water and Less Exempt Compounds in Grams per Liter

ARCHITECTURAL APPLICATIONS	VOC LIMIT
Indoor carpet adhesives	50
Carpet pad adhesives	50
Outdoor carpet adhesives	150
Wood flooring adhesive	100
Rubber floor adhesives	60
Subfloor adhesives	50
Ceramic tile adhesives	65
VCT and asphalt tile adhesives	50
Drywall and panel adhesives	50
Cove base adhesives	50
Multipurpose construction adhesives	70
Structural glazing adhesives	100
Single-ply roof membrane adhesives	250
Other adhesives not specifically listed	50
SPECIALTY APPLICATIONS	
PVC welding	510
CPVC welding	490
ABS welding	325
Plastic cement welding	250
Adhesive primer for plastic	550
Contact adhesive	80
Special purpose contact adhesive	250
Structural wood member adhesive	140
Top and trim adhesive	250
SUBSTRATE SPECIFIC APPLICATIONS	
Metal to metal	30
Plastic foams	50
Porous material (except wood)	50
Wood	30
Fiberglass	80

1. If an adhesive is used to bond dissimilar substrates together, the adhesive with the highest VOC content shall be allowed.
2. For additional information regarding methods to measure the VOC content specified in this table, see South Coast Air Quality Management District Rule 1168.

TABLE 4.504.2
SEALANT VOC LIMIT
Less Water and Less Exempt Compounds in Grams per Liter

SEALANTS	VOC LIMIT
Architectural	250
Marine deck	760
Nonmembrane roof	300
Roadway	250
Single-ply roof membrane	450
Other	420
SEALANT PRIMERS	
Architectural Nonporous Porous	 250 775
Modified bituminous	500
Marine deck	760
Other	750

CALGREEN - VOC, FORMALDEHYDE LIMITS 3

SYMBOL	SPACE	DESCRIPTION	FRAME SIZE	GLASS TYPE	HARD WARE	NOTES
LOWER FLOOR INTERIOR DOORS						
001	LAUNDRY	SOLID CORE POCKET DOOR	3'-6" x 8'-0"		POCKET	
002	LAUNDRY	SOLID CORE LOUVERED DOOR	2'-4" x 8'-0"		PASSAGE	LOUVERED TO ALLOW MIN. 100CFM MAKE-UP AIR
003	BATH #4/ HALLWAY	SOLID CORE DOOR	2'-8" x 8'-0"		PRIVACY	
004	BATH #4/ BEDROOM #4	SOLID CORE DOOR	2'-8" x 8'-0"		PRIVACY	
005	BEDROOM #4 CLOSET	DOUBLE SOLID CORE DOOR	5'-0" x 8'-0"		PASSAGE	
006	BEDROOM #4/ HALLWAY	SOLID CORE DOOR	2'-8" x 8'-0"		PRIVACY	
007	BEDROOM #2 VESTIBULE	SOLID CORE DOOR	2'-8" x 8'-0"		PRIVACY	
008	BEDROOM #2 CLOSET	SOLID CORE SLIDER	6'-0" x 8'-0"		PASSAGE	
009	BATH #2	SOLID CORE DOOR	2'-6" x 8'-0"		PRIVACY	
010	BEDROOM #3 VESTIBULE	SOLID CORE DOOR	2'-8" x 8'-0"		PRIVACY	
011	BEDROOM #3 CLOSET	SOLID CORE SLIDER	6'-0" x 8'-0"		PASSAGE	
012	BATH #3	SOLID CORE DOOR	2'-6" x 8'-0"		PRIVACY	
UPPER FLOOR INTERIOR DOORS						
101	MUDROOM	SOLID CORE POCKET DOOR	2'-8" x 8'-0"		POCKET	
102	GARAGE	SOLID CORE DOOR	2'-8" x 8'-0"		LOCKSET	20 MINUTE FIRE-RATED, SELF CLOSER, SELF SEAL
103	POWDER	SOLID CORE DOOR	2'-8" x 8'-0"		PRIVACY	
104	PANTRY	SOLID CORE DOOR	2'-8" x 8'-0"		PASSAGE	
105	PRIMARY VESTIBULE	SOLID CORE DOOR	2'-10" x 8'-0"		PRIVACY	
106	PRIMARY BATH	SOLID CORE DOOR	2'-10" x 8'-0"		PRIVACY	
107	PRIMARY CLOSET	SOLID CORE DOOR	2'-6" x 8'-0"		PASSAGE	
108	PRIMARY BEDROOM	SOLID CORE POCKET DOOR	2'-8" x 8'-0"		POCKET	LOCKABLE POCKET HARDWARE
SKYLIGHTS						
SK1	PRIMARY BATH	SKYLIGHT - VELUX VCE 2234 OR EQUAL	2'-1 1/2" x 3'-1 1/2" (OUTSIDE CURB)	DBL.	REMOTE OPENER	OPERABLE CURB MOUNTED EVALUATION REPORT #0199
SK2	PRIMARY BATH	SKYLIGHT - VELUX VCE 2234 OR EQUAL	2'-1 1/2" x 3'-1 1/2" (OUTSIDE CURB)	DBL.	REMOTE OPENER	OPERABLE CURB MOUNTED EVALUATION REPORT #0199
SK3	PRIMARY HALLWAY	SKYLIGHT - VELUX VCE 2222 OR EQUAL	2'-1 1/2" x 2'-1 1/2" (OUTSIDE CURB)	DBL.	REMOTE OPENER	OPERABLE CURB MOUNTED EVALUATION REPORT #0199
SK4	PRIMARY CLOSET	SKYLIGHT - VELUX VCE 2222 OR EQUAL	2'-1 1/2" x 2'-1 1/2" (OUTSIDE CURB)	DBL.	REMOTE OPENER	OPERABLE CURB MOUNTED EVALUATION REPORT #0199

GENERAL NOTES:

THESE SCHEDULES FOR REFERENCE ONLY.

VERIFY ALL DOOR & WINDOW UNITS, SIZES, ROUGH OPENINGS, OPERATION, JAMB DEPTHS & DETAILS WITH OWNER PRIOR TO CONSTRUCTION.

FIELD VERIFY PLANS, ELEVATIONS, WINDOW & DOOR SCHEDULE WITH WINDOW MANUFACTURER, CONTRACTOR, OWNER, & ARCHITECT PRIOR TO FINAL ORDER.

FRAMING CONTRACTOR TO FIELD VERIFY ACTUAL UNIT ROUGH OPENINGS IN FIELD WITH WINDOW MANUFACTURER PRIOR TO FRAMING. VERIFY ALL WINDOW AND DOOR HEAD HEIGHTS IN FIELD.

ALL NEW GLAZING TO BE DUAL PANE WITH DIVIDED LIGHTS PER EXTERIOR ELEVATIONS. CONFIRM SIDELITES AND DOOR GLAZING, MULLIONS, COLORS, STYLE, DETAILS WITH OWNER.

NOTE: PER C.R.C. 308 TEMPERED SAFETY GLAZING WITHIN 24" OF A DOOR OR WITHIN 18" OF FLOOR OR AT SHOWERS AND BATHS. ALL TEMPERED GLAZING SHALL BE AFFIXED WITH A PERMANENT LABEL.

WINDOWS THAT MEETS ALL CONDITIONS SHALL BE TEMPERED PER CRC R308.4: WHERE EXPOSED AREA IS GREATER THAN 9 SF, EXPOSED BOTTOM EDGES IS LESS THAN 18", EXPOSED TOP EDGE GREATER THAN 36" ABOVE THE FLOOR AND ONE OR MORE WALKING SURFACES WITHIN 36" HORIZONTALLY OF THE PLANE OF GLAZING SHALL BE TEMPERED GLAZING.

EGRESS WINDOWS SHALL PROVIDE A CLEAR, UNOBSTRUCTED OPENING OF MINIMUM 24" HEIGHT, MINIMUM 20" WIDTH, WITH MAXIMUM 44" FROM INTERIOR FINISHED FLOOR TO WINDOW OPENING. MINIMUM 5.7 sf TOTAL OPEN AREA, OR MINIMUM 5.0 sf TOTAL OPEN AREA FOR GROUND FLOOR LOCATIONS.

THE NFRC LABEL WHICH STATES THE REQUIRED U-VALUE AND SGHC FOR ALL FENESTRATION PRODUCTS SHALL NOT BE REMOVED PRIOR TO INSPECTION OR REMOVAL BY A BUILDING INSPECTOR, AND SHALL REFLECT THE VALUES LISTED IN THE ENERGY REPORT.

GLASS SKYLIGHTS: CRC R308.6

a. LAMINATED GLASS SHALL BE MINIMUM 30-MIL POLYVINYL INTERLAYER OR EQUIVALENT.

b. OR, WHERE EACH PANE OF GLASS IS LESS THAN 16 SQUARE FEET: GLASS SHALL BE TEMPERED AND LESS THAN 3/16" THICK OR LAMINATED (15 MIL) AND THE HIGHEST POINT OF GLASS SHALL NOT BE MORE THAN 12' ABOVE A WALKING SURFACE BELOW.

c. UNIT SKYLIGHTS ARE TESTED AND LABELED AS COMPLYING WITH ONE OF THE FOLLOWING AAMA/WDMA/CSA101/I.S.2/A440.

d. IF THE PITCH OF THE ROOF IS LESS THAN 3:12 A CURB EXTENDING AT LEAST 4" ABOVE THE PLAN OF THE ROOF IS REQUIRED.

INTERIOR DOOR AND SKYLIGHT SCHEDULE 2

SYMBOL	SPACE	DESCRIPTION	FRAME SIZE	GLASS TYPE	HARD WARE	NOTES
LOWER FLOOR EXTERIOR DOORS						
B1	FAMILY ROOM	OUTSWING 4-PANEL ACCORDION GLASS DOOR	(4) 3'-0" x 8'-0" TOTAL: 12'-0" x 8'-0"	DBL.	LOCKSET	WEATHER STRIP, TEMPERED
B2	BEDROOM #2	OUTSWING ALUMINUM GLASS DOOR	3'-0" x 8'-0"	DBL.	LOCKSET	WEATHER STRIP, TEMPERED
B3	BEDROOM #3	OUTSWING ALUMINUM GLASS DOOR	3'-0" x 8'-0"	DBL.	LOCKSET	WEATHER STRIP, TEMPERED
B4	LOWER HALL	INSWING ALUMINUM DOOR w/ GLASS ABV.	2'-10" x 8'-0"	DBL.	LOCKSET	WEATHER STRIP, TEMPERED
B5	BSMT STORAGE	OUTSWING ALUMINUM GLASS DOOR	3'-0" x 6'-4" (CLG HEIGHT IN STORAGE IS 6'-6" MAX)	DBL.	LOCKSET	VERIFY HEADER IN FIELD WEATHER STRIP, TEMPERED
LOWER FLOOR EXTERIOR WINDOWS						
BA	BEDROOM #4	(2) CASEMENT WINDOWS	(2) 2'-11" x 5'-0" TOTAL: 6'-0" x 5'-0"	DBL.		2" MULL
BB	FAMILY ROOM	CASEMENT WINDOW	3'-0" x 5'-6"	DBL.		
BC	FAMILY ROOM	CASEMENT WINDOW	3'-0" x 5'-6"	DBL.		
BD	BEDROOM #2	(2) CASEMENT WINDOWS	(2) 2'-6" x 4'-6" TOTAL: 5'-2" x 4'-6"	DBL.		2" MULL
BE	BEDROOM #3	FIXED WINDOW	9'-0" x 4'-6"	DBL.		
BF	BEDROOM #3	FIXED WINDOW	6'-6" x 4'-6"	DBL.		
BG	BEDROOM #3	CASEMENT WINDOW	2'-6" x 4'-6"	DBL.		
BH	BATH #3	CASEMENT WINDOW	2'-8" x 2'-8"	DBL.		
BJ	LAUNDRY	(2) CASEMENT WINDOWS	(2) 2'-6" x 4'-6" TOTAL: 5'-2" x 4'-6"	DBL.		2" MULL
BK	BSMT STORAGE	CASEMENT WINDOW	(2) 2'-0" x 3'-6"	DBL.		2" MULL, HEADER HEIGHT @ 6'-8"
UPPER FLOOR EXTERIOR DOORS						
D1	ENTRY	INSWING ALUMINUM GLASS DOOR	3'-6" x 8'-0"	DBL.	LOCKSET	WEATHER STRIP, TEMPERED
D2	FAMILY ROOM	OUTSWING 8-PANEL ACCORDION GLASS DOOR	(8) 3'-0" x 9'-0" TOTAL: 24'-0" x 9'-0"	DBL.	LOCKSET	HEADER HEIGHT @ 9'-0", WEATHER STRIP, TEMPERED
D3	PRIMARY BEDROOM	OUTSWING ALUMINUM GLASS DOOR	3'-0" x 9'-0"	DBL.	LOCKSET	HEADER HEIGHT @ 9'-0", WEATHER STRIP, TEMPERED
D4	GARAGE	OVERHEAD SECTIONAL	16'-0" x 8'-0"	DBL.	GARAGE	WEATHER STRIP, TEMPERED
D5	GARAGE	CUSTOM ALUMINUM DOOR W/ GLASS ABV.	3'-0" x 8'-0"	DBL.	LOCKSET	WEATHER STRIP, TEMPERED
UPPER FLOOR EXTERIOR WINDOWS						
A	MUDROOM	CASEMENT WINDOW	(2) 1'-8" x 4'-6"	DBL.		2" MULL
B	POWDER	CASEMENT WINDOW	(2) 1'-8" x 4'-6"	DBL.		2" MULL
C	PANTRY	CASEMENT WINDOW	2'-6" x 4'-6"	DBL.		
D	STAIRWAY	FIXED WINDOW w/ CASEMENT BELOW	2'-4" x 6'-6" w/ 2'-4" x 3'-0" BELOW	DBL.		TEMPERED
E	STAIRWAY	FIXED WINDOW w/ CASEMENT BELOW	2'-4" x 6'-6" w/ 2'-4" x 3'-0" BELOW	DBL.		TEMPERED
F	FAMILY ROOM	CASEMENT WINDOW	4'-0" x 5'-6"	DBL.		
G	FAMILY ROOM	CASEMENT WINDOW	4'-0" x 5'-6"	DBL.		
H	PRIMARY BEDROOM	FIXED WINDOW	9'-0" x 5'-6"	DBL.		HEADER HEIGHT @ 9'-0"
J	PRIMARY BEDROOM	FIXED WINDOW	6'-6" x 5'-6"	DBL.		HEADER HEIGHT @ 9'-0"
K	PRIMARY BEDROOM	CASEMENT WINDOW	2'-6" x 5'-6"	DBL.		HEADER HEIGHT @ 9'-0"
L	PRIMARY CLOSET	CASEMENT WINDOW	2'-0" x 4'-6"	DBL.		
M	PRIMARY BATH	CASEMENT WINDOW	2'-0" x 4'-6"	DBL.		TEMPERED
N	PRIMARY BATH	(2) CASEMENT WINDOWS	(2) 2'-0" x 4'-6" TOTAL: 4'-2" x 4'-6"	DBL.		2" MULL, TEMPERED
P	GARAGE	(2) CASEMENT WINDOWS	(2) 2'-0" x 5'-6" TOTAL: 4'-2" x 5'-6"	DBL.		TEMPERED, 2" MULL, INSTALL LIMITER FOR FALL PROTECTION
Q	GARAGE ATTIC	FIXED WINDOW	2'-6" x 3'-0"	DBL.		GARAGE ATTIC WINDOW
R	GARAGE	(2) CASEMENT WINDOWS	(2) 2'-0" x 5'-6" TOTAL: 4'-2" x 5'-6"	DBL.		2" MULL

PRELIMINARY - NOT YET APPROVED FOR CONSTRUCTION

FOR OFFICIAL CITY USE, STAMPING

EXTERIOR DOOR/ WINDOW SCHEDULE 1

ISSUE LOG

DESIGN REVIEW SUBMITTAL MAY 20, 2025

DR PLAN CHECK RESUBMITTAL JUL. 15, 2025

DR PLAN CHECK RESUBMITTAL OCT. 03, 2025

LICENSED ARCHITECT ANDREW BERLE YOUNG C-21679 REN. 4.30.26 STATE OF CALIFORNIA

Young & Borlik Architects
4962 EL CAMINO REAL, STE 218
LOS ALTOS, CALIFORNIA 94022
650-688-1950 | YBarchitects.com

NEW RESIDENCE FOR:
ERIN AND EMILY CONLEY
962 HILLCREST DRIVE
REDWOOD CITY, CA 94062

A.P.N. 058-263-040

CHECKED AEY | DRAWN OH, MC

DATE SEP. 23. 2024

JOB # CONLEY

A9.1

Copyright 2023 YOUNG AND BORLIK ARCHITECTS INC. All designs, drawings, and written materials appearing herein, are protected and constitute original and unpublished work of the Architect and may not be revised, re-used, copied, or disclosed without the written consent of the Architect. Equipment manufactured by others is excluded. Drawings and specifications are instruments of architectural service, and shall remain the the property of the Architect. Use is restricted to the site for which they are prepared.

WALL TYPES

EXTERIOR WALL TYPES - SEE SYMBOLS ON A.2.1.1 AND A2.2.1

W-1

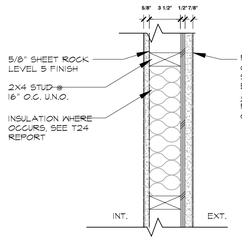

EXT. 2x4
STUCCO

W-2

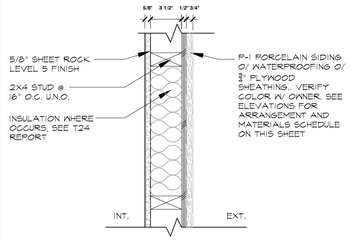

EXT. 2x4
VERTICAL PORCELAIN

W-3

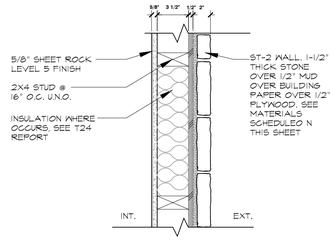

EXT. 2x4
STONE

W-4

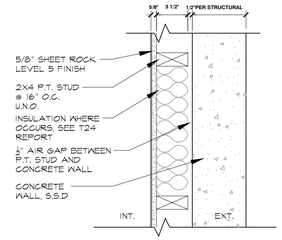

EXT. 2x4
FOUNDATION FURRING WALL

W-1

INTERIOR WALL TYPES - SEE SYMBOLS ON A.2.1.1 AND A2.2.1

W-5

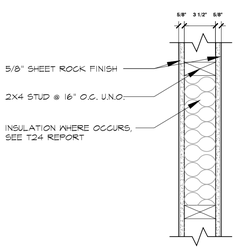

INT. 2x4
SHEETROCK

W-6

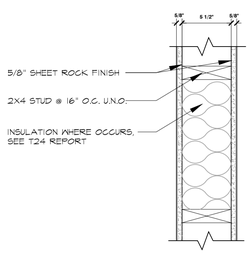

INT. 2x6
SHEETROCK

W-7

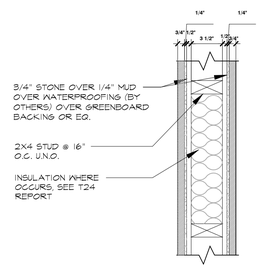

INT. 2x4
TILE+TILE

W-8

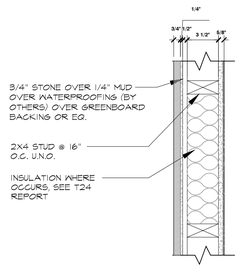

INT. 2x4
TILE+SHEETROCK

W-9

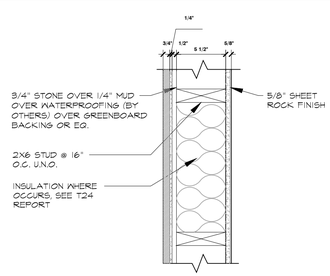

INT. 2x6
TILE+SHEETROCK

W-10

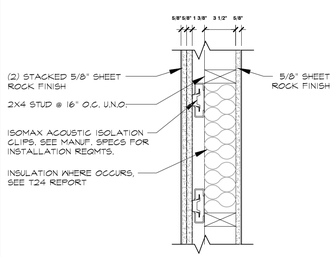

INT. 2x4
SHEETROCK ACOUSTIC

W-11

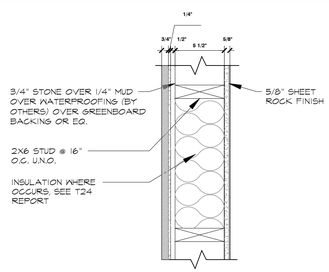

INT. 2x6
SHEETROCK FIRE

QUANTITY	SPACE	APPLIANCE TYPE	MANUFACTURER	MODEL NUMBER	SIZE	FINISH COLOR/ NOTES
BASEMENT APPLIANCE SCHEDULE						
1	LAUNDRY	CLOTHES WASHER	BOSCH			FRONT LOADING
1	LAUNDRY	CLOTHES DRYER	BOSCH			FRONT LOADING
1	FAMILY ROOM	BEVERAGE FRIDGE	SUBZERO	DEU2450R/ADA		PANEL READY
1	FAMILY ROOM	FIREPLACE	DAVINCI			GAS FIREPLACE
2	MECH ROOM	INTERIOR FURNACE	MITSUBISHI OR EQ.			
2	EXTERIOR	AC CONDENSER UNIT	MITSUBISHI OR EQ.			
2	MECH ROOM	WATER HEATER	AO SMITH OR EQ.			75 GAL. TANK, GAS
FIRST FLOOR APPLIANCE SCHEDULE						
1	KITCHEN	RANGE				
1	KITCHEN	HOOD				
2	KITCHEN	OVEN				
1	KITCHEN	INSTANT HOT WATER	INSINKERATOR	HOT250 - HOT ONLY		
1	KITCHEN	GARBAGE DISPOSAL	INSINKERATOR	EVOLUTION 1.0HP		
1	KITCHEN	DISHWASHER				PANEL READY
1	KITCHEN	FRIDGE	SUBZERO	CL3650UFD/O	36"x 24"x84" HIGH	PANEL READY
1	FAMILY ROOM	BEVERAGE FRIDGE	SUBZERO	DEU2450R/ADA	24"x23.125"x32.5" HIGH	PANEL READY
1	FAMILY ROOM	GARBAGE DISPOSAL	INSINKERATOR	EVOLUTION 1.0HP		
1	FAMILY ROOM	FIREPLACE	DAVINCI			GAS FIREPLACE
1	MUDROOM	CLOTHES WASHER				FRONT LOADING, STACK
1	MUDROOM	CLOTHES DRYER				FRONT LOADING, STACK

APPLIANCE SCHEDULE 2

ID	MATERIAL TYPE	MANUFACTURER/ PROVIDER	SIZE	FINISH COLOR/ NOTES
EXTERIOR MATERIALS				
P-1	EXT. PORCELAIN WALL			SIMULATES WOOD SIDING
ST-1	EXT. STONE PATIO			
ST-2	EXT. STONE WALL			
WD-1	EXT. WOOD DECK			
INTERIOR MATERIALS				
WD-2	INT. WOOD FLOOR			ENGINEERED WOOD
WD-3	INT. WOOD CEILING			STAINED
ST-3	INT. STONE FLOOR			
ST-4	INT. STONE WALL			
SR-1	INT. SHEET ROCK WALL			LEVEL V FINISH WHEREVER SHEETROCK OCCURS

PRELIMINARY-
NOT YET APPROVED
FOR CONSTRUCTION

FOR OFFICIAL CITY USE, STAMPING

Copyright 2025 YOUNG AND BORLIK ARCHITECTS INC. All designs, drawings, and written materials appearing herein, are protected and constitute original and unpublished work of the Architect and may not be revised, re-used, copied, or disclosed without the written consent of the Architect. Equipment manufactured by others is excluded. Drawings and specifications are instruments of architectural service, and shall remain the the property of the Architect. Use is restricted to the site for which they are prepared.

ISSUE LOG
DESIGN REVIEW SUBMITTAL
MAY 20, 2025
DR PLAN CHECK RESUBMITTAL
JUL. 15, 2025
DR PLAN CHECK RESUBMITTAL
OCT. 03, 2025

LICENSED ARCHITECT ANDREW EMILE YOUNG C-21679 REN. 4.30.26 STATE OF CALIFORNIA

Young & Borlik Architects
4962 EL CAMINO REAL, STE 218
LOS ALTOS, CALIFORNIA 94022
650-688-1950 | YBarchitects.com

Y&B

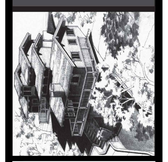

NEW RESIDENCE FOR:
ERIN AND EMILY CONLEY
962 HILLCREST DRIVE
REDWOOD CITY, CA 94062

A.P.N. 058-263-040

CHECKED	DRAWN
AEY	OH, MC

DATE SEP. 23. 2024

JOB # CONLEY

A9.2

FORCED AIR FURNACE:

1. COMPARTMENT DIMENSION SHALL HAVE 3" MINIMUM CLEARANCE ON SIDE AND BACK, 8" MINIMUM CLEAR FROM FRONT OF EQUIPMENT TO COMBUSTION AIR INTAKE. THE MINIMUM WIDTH PERMITTED IS 12" GREATER THAN THE EQUIPMENT.

2. FURNACE LOCATED IN COMPARTMENTS WITH RETURN AIR AT BOTTOM SHALL HAVE TIGHT FITTING DOORS TO MAINTAIN POSITIVE SEPARATION FROM THE RETURN AIR GRILL.

3. INSTALL AUTOMATIC NIGHT SETBACK THERMOSTATS ON ALL HVAC EQUIPMENT.

4. AN UNOBSTRUCTED WORKING SPACE NOT LESS THAN 30" IN DEPTH AND THE HEIGHT OF THE FURNACE, BUT NOT LESS THAN 30", SHALL BE PROVIDED ALONG THE ENTIRE FRONT OF EVERY WARM-AIR FURNACE WHEN THE DOOR OF THE FURNACE ENCLOSURE IS OPEN.

5. AREA OF COMBUSTION AIR OPENING OF 1 SQUARE INCH PER 1000 BTU (100 SQUARE INCH MINIMUM) IS REQUIRED INTO COMPARTMENT, HALF OF AREA WITHIN 12" OF CEILING AND HALF WITHIN 12" OF FLOOR

6. COMBUSTION AIR FROM EXTERIOR TO BE PROVIDED THROUGH 26 GA. GALVANIZED SLEEVE EXTENDING 6" MINIMUM ABOVE CEILING JOISTS AND NOT THROUGH A SCREEN. ATTIC TO HAVE ADEQUATE VENTILATION.

7. COMBUSTION AIR FROM OUTSIDE SHALL HAVE AN 1/8 TO 1/16 INCH SCREEN AT OUTSIDE OPENING TO MEET WUI REQUIREMENTS.

8. SEPARATE DUCTS FOR UPPER AND LOWER COMBUSTION AIR SUPPLY OPENINGS

ADDITIONAL REQUIREMENTS FOR FURNACE IN ATTIC:

1. SCUTTLE 30"x30" NOT OVER 20 FEET FROM THE EQUIPMENT
2. UNOBSTRUCTED PASSAGEWAY 24" WIDE OF SOLID CONTINUOUS FLOORING FROM SCUTTLE TO EQUIPMENT AND ITS CONTROL.
3. LIGHT OVER EQUIPMENT WITH SWITCH AT SCUTTLE.
4. VENT THROUGH ROOF A MINIMUM OF 5' ABOVE THE HIGHEST VENT COLLAR WHICH IT SERVES.
5. FURNACE INSTALLATION SHALL MEET ALL LISTED CLEARANCE. NOT LINE CONTACT PERMITTED. FURNACE IS NOT ALLOWED IN ATTIC AREA OF TRUSSED ROOFS.

ADDITIONAL REQUIREMENTS FOR FURNACE IN CRAWL SPACE:

1. 30" WORKING SPACE AT CONTROLS
2. OUTLET AND LIGHT AT UNIT CONTROL SIDE
3. SWITCH TO LIGHT AT UNDER FLOOR ACCESS ENTRANCE
4. APPLIANCE ON 3" MINIMUM CONCRETE SLAB ABOVE GRADE
5. IF SUSPENDED, MINIMUM 6" FROM GROUND
6. ACCESS DOOR TO BE MINIMUM 30"x30". MAXIMUM DISTANCE TO APPLIANCE IS 20'
7. 4" THICK CONCRETE BED IF EXCAVATION GREATER THAN 12" BELOW GRADE.
8. 12" SIDE CLEARANCE TO SOIL OR COMBUSTIBLES.

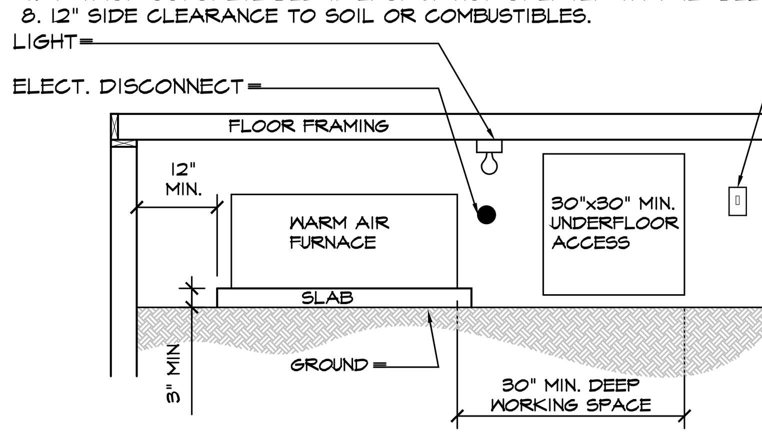

FURNACE IN CRAWL SPACE ON SLAB

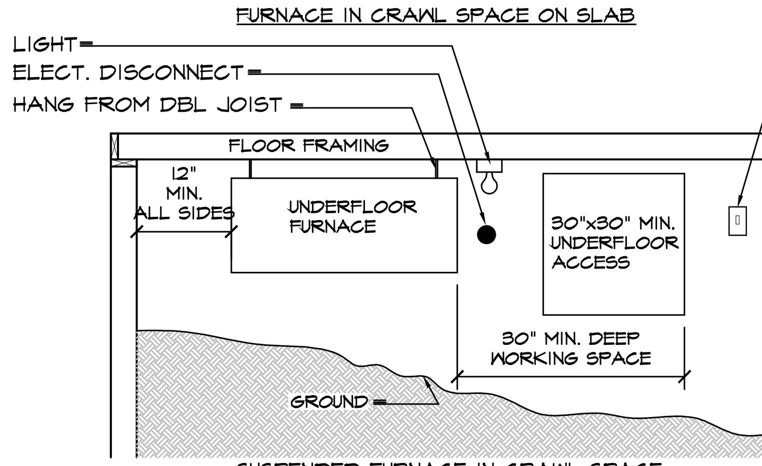

SUSPENDED FURNACE IN CRAWL SPACE

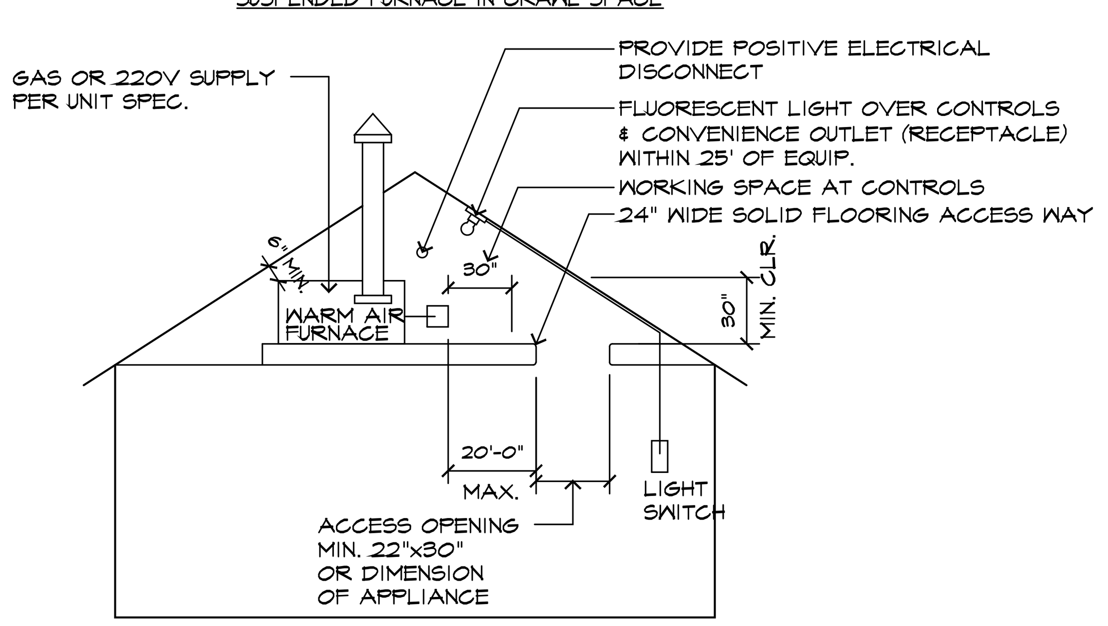

CENTRAL WARM-AIR FURNACES INSTALLED IN THE ATTIC MUST BE ACCESSIBLE FOR ROUTINE INSPECTION AND MAINTENANCE BY THE OWNER, OCCUPANT AND FOR SERVICE AND REPAIR AS NEEDED. CHANGING FILTERS, LUBRICATING MOTOR AND FAN BEARINGS, CHECKING BELT TENSIONS AND RE-TIGHTING THE PILOT FOLLOWING A SERVICE INTERRUPTION ARE NORMAL OWNER FUNCTIONS. ADEQUATE LIGHT, AN ELECTRICAL OUTLET, SAFE ACCESS WAY AND SUFFICIENT WORKING SPACE ON THE CONTROL SIDE ALL ENCOURAGE AND FACILITATE MAINTENANCE AND ENABLE RAPID EGRESS IN AN EMERGENCY.

WARM AIR FURNACES INSTALLED IN ATTICS OR FURRED SPACES SHALL BE INSTALLED AS FOLLOWING:
1. A MINIMUM 30"X30" ACCESS (20 FEET MAXIMUM FROM FURNACE)
2. CONTINUOUS SOLID FLOORING (5/8" CDX OR EQ.) 24" MIN. WIDE FROM ACCESS TO FURNACE
3. A LEVEL WORKING PLATFORM 30" MIN. IN DEPTH ALONG THE ENTIRE FIREBOX SIDE OF FURNACE
4. A PERMANENT 110V ELECTRICAL OUTLET AND LIGHTING FIXTURE LOCATED AT OR NEAR FURNACE LIGHTING FIXTURE TO BE CONTROLLED BY A SWITCH LOCATED AT ACCESS.
5. THE FAU SHALL BE LISTED FOR INSTALLATION IN ATTICS AND ON COMBUSTIBLE FLOORING. CLEARANCES SHALL BE AS PER MANUFACTURER'S SPECIFICATIONS AND PER UBC 304.

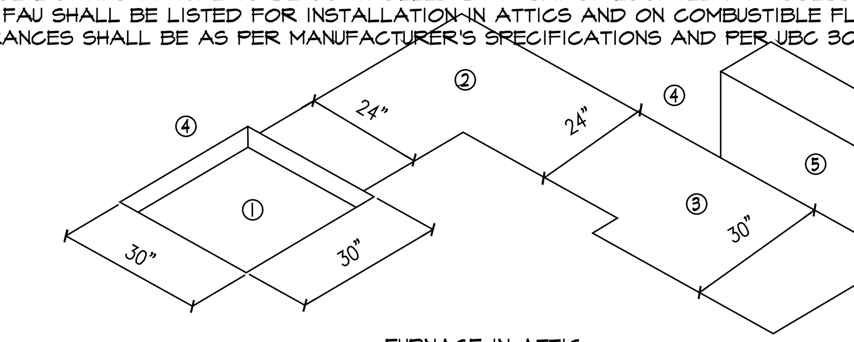

FURNACE IN ATTIC

WATER HEATER ENCLOSURE:

1. 75 GALLON AND INSULATED TYPE, SEE TITLE 24 ENERGY CALCULATION.

2. CLEARANCES - INSULATED WATER HEATERS SHALL NOT BE INSTALLED CLOSER THAN 2 INCHES TO UNPROTECTED COMBUSTIBLE CONSTRUCTION NOR CLOSER THAN ONE INCH TO PROTECTED COMBUSTIBLE CONSTRUCTION. THE CLEARANCE MAY BE REDUCED FOR WATER HEATERS WHICH ARE DESIGNED AND LISTED OR APPROVED FOR INSTALLATION ADJACENT TO COMBUSTIBLE MATERIALS AND INSTALLED IN ACCORDANCE WITH THE CONDITIONS OF SUCH APPROVAL. PROTECTED COMBUSTIBLE CONSTRUCTION SHALL BE NOT LESS THAN ON HOUR FIRE RESISTIVE CONSTRUCTION, CONSISTING OF 2x4 OR 2x6 STUDS SPACED @ 16" O.C. WITH A LAYER OF 5/8" TYPE "X" GYPSUM BOARD ON EACH FACE. FIRE TAPE ALL JOINTS.

3. DOOR - SHALL BE SOLID CORE FOR EXTERIOR LOCATIONS.

4. ENCLOSURE & COMBUSTION AIR - A MINIMUM OF 6 INCHES OF UNOBSTRUCTED SPACE SHALL BE REQUIRED ACROSS THE ENTIRE FRONT OF THE WATER HEATER AND SHALL EXTEND FROM THE DOOR TO AT LEAST THE TOP OF THE WATER HEATER. AREA OF DUCTS OR OPENINGS SHALL BE DIVIDED WITH AT LEAST ONE-HALF OF THE TOTAL REQUIRED AREA EXTENDING INTO THE UPPER 12 INCHES OF THE WATER HEATER ENCLOSURE. REQUIRED OPENING SHALL NOT BE LESS THAN 3 INCHES IN THE LEAST DIMENSION, SEE PLAN FOR SIZE OF VENTS. VENTS SHALL BE SCREENED WITH NOT SMALLER THAN 1/4" MESH. FRAME AND MESH OF VENTS SHALL BE OF GALVANIZED METAL FOR EXTERIOR APPLICATION.

5. PRESSURE RELIEF VALVE - SHALL BE INSTALLED WITH 3/4" MINIMUM SIZE COPPER PIPE TO EXTERIOR OF BUILDING LOCATED WITH 6" OF THE EXTERIOR GRADE, WITH 1/4" PER FOOT MINIMUM SLOPE.

6. ELECTRICAL - ENCLOSURE SHALL BE PROVIDED WITH A GFI DUPLEX OUTLET. THE ENCLOSURE SHALL HAVE ONE FLUORESCENT LIGHT FIXTURE SET ON A SWITCH LOCATED NEXT TO THE DOOR.

7. VENTING - SHALL BE AS PER MANUFACTURE'S RECOMMENDATIONS AND AS PER THE REQUIREMENTS OF THE STATE OF CALIFORNIA AND LOCAL JURISDICTIONS.

8. SAFETY PAN - FURNISH AND INSTALL AN ALUMINUM SAFETY PAN WITH 3/4" DRAIN OUTLET TO THE EXTERIOR OF THE BUILDING. TERMINATE AS PER PRESSURE RELIEF VALVE.

9. SEISMIC STRAP - SHALL BE 3" WIDE x 16 GA. STEEL STRAP WITH 1/2" DIAMETER LAG BOLT EACH END INTO NEAREST WOOD STUD. THE SEISMIC STRAPPING SHALL BE AT TWO LOCATIONS, ONE AT 1/3 FROM THE TOP AND ONE AT 1/3 FROM THE BOTTOM OF THE WATER HEATER. THE LOWER 1/3 STRAP HAS A MINIMUM 4" CLEARANCE BETWEEN THE CONTROLS.

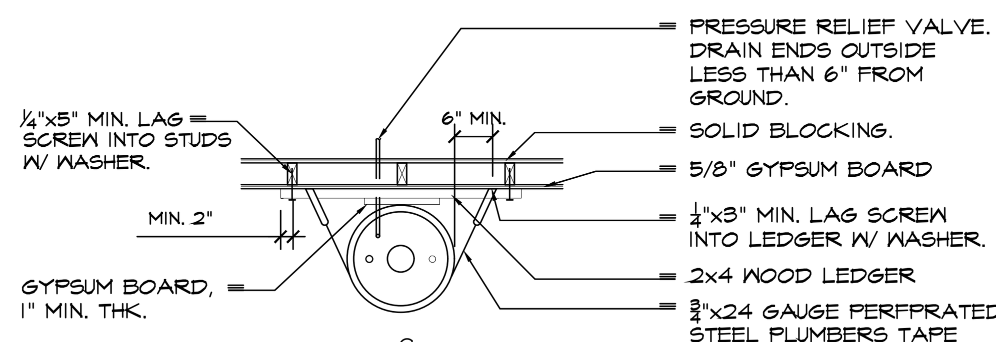

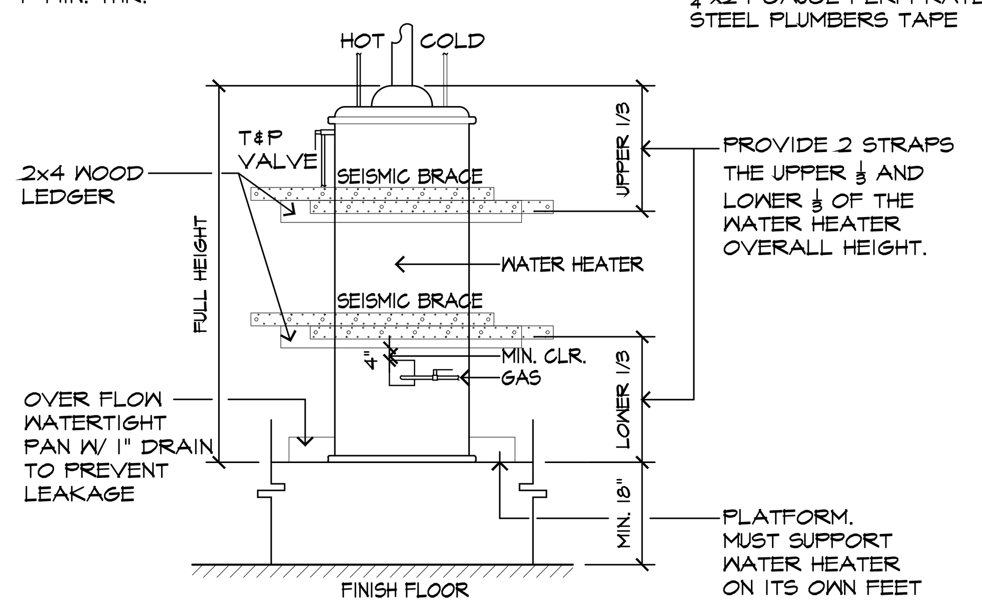

WATER HEATER:
PER 2022 RESIDENTIAL ENERGY CODE 150.0 (n), SYSTEMS USING GAS OR PROPANE WATER HEATERS SHALL:
A. WITHIN 3 FEET OF EACH WATER HEATER AND ACCESSIBLE TO THE WATER HEATER WITH NO OBSTRUCTIONS, INSTALL A DEDICATED 125 VOLT, 20 AMP ELECTRICAL RECEPTACLE THAT IS CONNECTED TO THE ELECTRIC PANEL WITH A 120/240 VOLT 3 CONDUCTOR, 10 AWG COPPER BRANCH CIRCUIT.
(I) BOTH ENDS OF THE UNUSED CONDUCTOR SHALL BE LABELED WITH THE WORD "SPARE" AND BE ELECTRICALLY ISOLATED
(II) A RESERVED SINGLE POLE CIRCUIT BREAKER SPACE IN THE ELECTRICAL PANEL ADJACENT TO THE CIRCUIT BREAKER FOR THE BRANCH CIRCUIT AND LABELED WITH THE WORDS "FUTURE 240V USE" (ENERGY CODE §150.0(N)).
B. A CATEGORY III, IV, OR A TYPE B VENT WITH A STRAIGHT PIPE BETWEEN THE OUTSIDE TERMINATION AND THE SPACE WHERE THE WATER HEATER IS LOCATED SHALL BE INSTALLED.
C. A CONDENSATE DRAIN THAT IS A MAXIMUM OF TWO (2) INCHES HIGHER THAN THE BASE OF THE INSTALLED WATER HEATER THAT ALLOWS NATURAL DRAINING WITHOUT PUMP ASSISTANCE SHALL BE INSTALLED.

WATER HEATER

N.T.S.

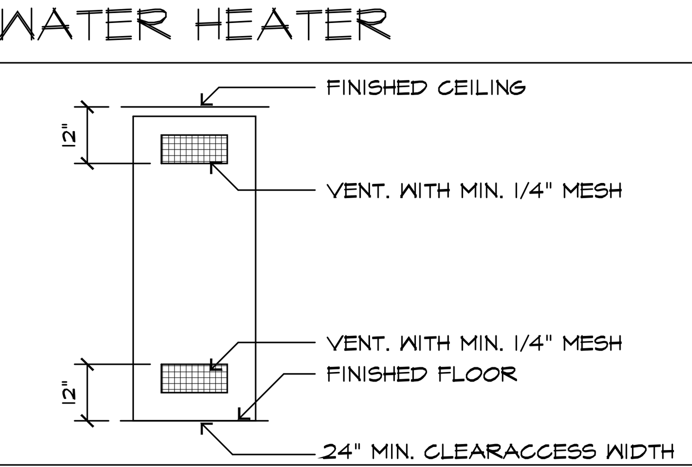

VENTS IN DOOR

N.T.S.

MEP PLAN DETAILS & GENERAL NOTES

MECHANICAL NOTES:
1. All work shall comply with the 2022 California Mechanical Code (CMC) and all applicable federal, state, and local codes. Mechanical work is to be bid design/build and provided complete per code.

2. Mechanical Layout - Layout shown is schematic and is shown for design intent only. Mechanical contractor to coordinate with the general contractor to design and install suitable mechanical distribution system per Title 24 and CGBSC. Verification of compliance with CGBSC may include construction documents, plans, specifications builder or installer certification, inspection reports, or other methods acceptable to the enforcing agency which show substantial conformance.

3. Mechanical System Design - Mechanical contractor to accept sole responsibility for proper design and installation of mechanical system. Mechanical contractor to coordinate with the general contractor to design and install suitable mechanical distribution system per Title 24. See sheet index for location of Title 24 conformance worksheets and energy compliance notes within this set.

4. Environmental comfort shall comply with CGBSC Residential Mandatory Measure section 4.507 for heating and air conditioning system. Duct systems are sized, designed, and equipment is selected using the following methods:
   a. Establish heat loss and heat gain values according to ANSI/ACCA 2 manual J-2016 or equivalent.
   b. Size duct systems according to ANSI/ACCA 1 manual D-2016 or equivalent.
   c. Select heating and cooling equipment according to ANSI/ACCA 3 manual S-2014 or equivalent.

5. Heating - Per 2022 CRC, Section R303.10 heating facilities shall be capable of maintaining a minimum room temperature of 68°F at a point three feet above the floor and two feet from exterior walls in all habitable rooms at the design temperature. For the purpose of sizing the space-conditioning (HVAC) system, the indoor design temperatures shall be 68°F for heating and 75°F for cooling. Outdoor design conditions shall be selected from Reference Joint Appendix JA2, which is based on data from the ASHRAE Climatic Data for Region X.

6. HVAC system installers required to be trained and certified in the proper installation of HVAC systems. Special inspectors employed by the enforcing agency must be qualified and able to demonstrate competence in the discipline they are inspecting.

7. Mechanical contractor to verify all air ducts, chases, locations, configurations, etc. w/ framing contractor during foundation work, prior to framing. Place ducts out of the way in attic usable storage area.

8. Furnace Clearance - Provide a minimum 6 inch clear space in front of furnaces, or per manufacturer specifications. Furnaces shall be installed per manufacturer's specifications and shall meet requirements of the 2022 CMC, Section 904.0. Verify all clearance and installation requirements per CMC Section 304.0 Service and Access to Equipment and Appliances prior to ordering or installing equipment.

9. Attic Furnaces - Per CMC 304.4 for furnaces installed in attics, provide a minimum 22" x 30" access opening or not less than the largest component, with a level platform, convenience duplex outlet, and area light switched from attic opening.

10. For stoves with indoor barbecue units, an exhaust duct and fan having a minimum capacity of 100 CFM per square foot of hood intake shall be installed, as wide as the unit and centered over the unit. When the duct penetrates a ceiling or floor, it shall be enclosed in a fire-resistive shaft covered on one side as required for one-hour fire-resistive construction, with the duct separated from the shaft with a minimum 1" airspace, and terminate minimum 18" above the roof surface.

11. Appliances designed to be fixed in position shall be securely fastened in place. Supports for appliances shall be designed and constructed to sustain vertical and horizontal loads as required by the CMC, Section 303.4. Anchorage of Appliances.

12. Garage Appliance Protection - Garage appliances with glow, spark, or flame ignition shall have igniter 18" above floor and shall be protected from auto impact (CMC, Sec. 305.1 Protection Against Damage).

13. Termination of all environmental air ducts shall be a minimum of 3 feet from property line; 3 feet from opening into the building; minimum 10 feet horizontally or 3 feet vertically from any operable skylight.

14. Use a minimum diameter of 4" dryer vent, soild-wall sheet metal beyond the dryer connection point, with a back draft damper, maximum length of 14' including two 90 degree elbows. Each additional elbow will cost 2' of overall length. Every pipe-to-pipe joint must be sealed with metal foil tape and screws are prohibited.

15. Fan duct requirement per ASHRAE 62.2, table 7-1:
   a. for bathrooms: fan must be attached to a minimum 4" duct, no longer than 70' of flex duct. Subtract 15' of allowed length for each elbow.
   b. for kitchen range hood fan: fan must be attached to a minimum 5" smooth duct, no longer that 85' of duct. Subtract 15' of allowed length for each elbow.

16. Provide required access to all dampers. Verify locations with owner and framing contractor prior to any rough-in.

17. The AC condensate waste pipe shall be connected indirectly to the drainage system through an air gap or air break.

18. Provide carbon monoxide testing & correction prior to occupancy. Install carbon monoxide alarms.

19. When a clothes dryer is installed in a closet, a minimum opening of 100 square inches for makeup air shall be provided in the door or by other approved means. CMC 504.4.1.

PLUMBING NOTES:
1. All work shall comply with the 2022 California Plumbing Code (CPC) and all applicable federal, state, and local codes. plumbing work is to be bid design/build and provided complete per code.

2. Mechanical and plumbing subcontractors are responsible for assessing existing services for compliance with proposed service requirements and recommending any measures required to handle additional loads prior to bid.

3. Plumbing subcontractor is required to coordinate with general contractor and framing contractor to ensure proper notching and boring of framing members per CRC R602 and structural requirements within this set. General contractor is to verify plumbing and mechanical runs within framing spaces. It is the general contractors responsibility to notify architect of conflicts prior to the onset of rough framing. When possible, locate all plumbing vents, roof jacks, vents and flues to less visible side and rear roof slopes (rather than in primary view).

4. Verify all plumbing fixtures, appliances, lighting selections, dimensions, & requirements etc. w/ owner prior to rough framing. coordinate with framing contractor.

5. Provide an approved non-removable anti-siphon back flow device at all interior and exterior hose bibbs., except the clothes washer connection, to prevent the possible back flow of contaminated water into the potable water system.

6. Water heaters shall be anchored or strapped to resist horizontal displacement due to earthquake motion. Strapping shall be within the upper third and lower third (1/3) of the vertical dimensions, with the lower with a minimum of 4" clearance above the controls.

7. Water heaters installed in garages shall be located minimum 18" above floor level, and located out of the normal path of any vehicles using the garage or protected from any mechanical damage from vehicles by a suitable enclosure or barrier.

8. Water heaters shall be provided with a pressure temperature relief valve with a drain terminating to the exterior, per CPC 608.5

9. All building water supply systems installed with quick acting valves shall be provided with devices to absorb water hammer pressure caused from quick valve closing, located as close as possible to these valves.

10. No building sewer or other drainage pipe, or part thereof can be constructed of materials other than cast iron, copper, stainless steel 316l, schedule 40 ABS, DWV, schedule 40 PVC DWV, or extra strength vitrified clay pipe when installed under or within 2" of any building or structure, or less than 1' below the surface of the ground. the minimum depth of the building sewer is 12" below grade to the top of the pipe. galvanized steel, galvanized wrought iron and stainless steel 304 cannot be used underground and must be at least 6" above ground. CPC 313.3 & 701.1.

11. A minimum of 2% slope (1/4" per ft) for the horizontal drainage piping. CPC section 708.0.

12. No under-floor cleanout shall be located exceeding 5 feet from an access door, trap door, or crawl hole. CPC 707.9

13. Waste and vent piping 2" and smaller above grade shall be standard weight cast iron or copper with matching fittings. All waste and vent lines 2-1/2" and larger inside building shall be standard weight cast iron. Approved plastic pipe may be used. Verify with local ordinance.

14. Water piping above ground to be minimum type M copper, water piping below ground to be minimum type l.

15. No dish washing machine shall be directly connected to drainage system or food disposer without the use of an approved air gap fitting on the discharge side of dish washing machine. CPC section 807.4.

16. Plumbing fixture water efficiency standards GPM requirements must meet 2022 California Green Building Standards code - Residential Mandatory Measures:

Fixture type	Flow rate
Shower heads (residential)	1.8 gpm at 80 psi
Lavatory faucets (residential)	1.2 gpm max. @ 60psi, 0.8 gpm min. @ 20psi
Lavatory faucets in common & public use areas	0.5 gpm @ 60 psi
Kitchen faucets	1.8 gpm @ 60 psi
Metering faucets	0.20 gal / cycle
Water closet	1.28 gal / flush
Urinals	0.125 gal / flush

17. Verify plumbing system integrity & leak detection prior to covering with finishes.

18. All hot water pipe is required to be insulated in new construction per cpc 609.11

24. Gas piping shall be schedule 40 black steel with 150 pound black steel fittings or as approved by local gas company.

25. Gas piping shall not pass under to through foundation or embedded within or below concrete slabs.

26. Gas shut-off valves for appliance fireplaces shall be located within 36" of the appliance

ELECTRICAL & LIGHTING NOTES:
1. All work shall comply with the 2022 California Electrical Code (CEC) and all applicable federal, state, and local states and ordinances. Electrical work is to be bid design/build and provided complete per code.

2. Electrical subcontractor is to determine service requirements for the new work prior to bid. Verify that existing service is sufficient to handle increased loads. Locate new sub-panels as directed by owner. All circuit panels are to be labeled.

4. All electrical load sheets and calculations required by the building department shall be the responsibility of the Electrical Subcontractor.

5. All unused and demolished electrical is to be removed back to the nearest utilized junction. No "dead hots" to remain after construction. Junction boxes must be accessible.

6. Coordinate electrical with framing contractor to accommodate switches, outlets, can lights, etc. within rough framing prior to construction. Verify blocking locations in field as necessary. Verify height of all wall mounted fixtures prior to drywall.

7. Verify all appliance specifications and requirements with manufacturer prior to construction.

8. Verify all fixture locations with owner prior to installation. All recessed fixtures to be approved by owner. Coordinate locations of recessed fixtures with framing, provide owner an opportunity to walk at "box-out" and include relocations as requested. Decorative fixtures are to be supplied by owner.

9. Low Voltage wiring and outlets to be coordinated by Owner. Contractor to verify location of all telephone, network, security, alarm, audio, video and other low voltage outlets with owner prior to installation of drywall.

10. All installed luminaries shall be high-efficacy in accordance with table 150.0-a. Verify all light fixture selections with owner.

11. Screw-based luminaires shall contain lamps that comply with Reference Joint Appendix JA8.

12. Per 2022 CEC, Article 210.70, at least one wall switch-controlled lighting outlet shall be installed in every habitable room, kitchen, and bathroom; in bathrooms, hallways, stairways, attached garages, and detached garages with electrical power; and at least one shall be installed at outdoor entrances or exits.

13. In bathrooms, garages, laundry rooms, walk-in closets and utility rooms, at least one luminaries in each of these spaces shall be controlled by a vacancy sensor.

14. Per 2022 CEC, Article 210.70, at least one wall switch-controlled lighting outlet shall be installed in every habitable room, kitchen, and bathroom; in bathrooms, hallways, stairways, attached garages, and detached garages with electrical power; and at least one shall be installed at outdoor entrances or exits. Lighting in habitable spaces (inc. living room, dining room, kitchen, and bedroom) shall have readily accessible wall-mounted dimming controls. Exceptions: Lighting controlled by vacancy sensor; remote control integrated lighting in ceiling fan; lighting on circuit with less than 20 watts of lighting power; navigation lighting such as night lights, step lights, and path lights less than 5 watts; lighting internal to drawers and cabinetry with opaque fronts or doors with automatic off controls.

15. Outdoor lighting: all outdoor lighting shall be controlled by a manual on and off switch that does not override to on; or controlled by one of the following methods: controlled by photocell and motion sensor. controls that override to on shall not be allowed unless the override automatically reactivates the motion sensor within 6 hours; photo control and automatic time switch control; astronomical time clock, or energy management control system. 150(k)3.

16. Luminaries recessed into ceilings shall meet all of the following per 150.0(k)1c: listed for zero clearance insulation, labeled that certifies the luminaries is airtight with a leakage less than 2.0cfm at 75 pascals, sealed with a gasket or caulk, allow replacement and maintenance to be readily accessible from below the ceiling without cutting holes in the ceiling, shall not contain screw base sockets; and shall contain light sources that comply with JA8.

17. Under cabinet lighting, display case lighting, shelf lighting, and switched outlets shall be switched separately than from other lighting systems. 150.0(k)2G. Provide separate switches for fan and light combinations light fixtures.

18. Per 2022 CEC, Article 210.52, Receptacles shall be installed such that no point measured horizontally along the floor line of any wall space is more than 6 ft from a receptacle outlet.

19. Per CEC, Article 680.43(B)(1), and (C): lighting fixtures, lighting outlets and fans located over an indoor spa or hot tub less than 7'-6" above the maximum water level and shall be protected by a ground-fault circuit interrupter and installed as follows:
   A. Recessed luminaires with a glass or plastic lens and nonmetallic or electrically isolated metal trim, suitable for use in damp locations.
   B. Surface-mounted luminaires with a glass or plastic globe and a non-metallic body or a metallic body isolated from contact and suitable for use in damp locations.
   Note: Lighting fixtures, lighting outlets and ceiling fans located 12 ft. or more above the maximum water level shall not require protection by a ground-fault circuit-interrupter.

20. Arc Fault Circuit Interrupter (AFCI) protected receptacles: all 120-volt, single phase, 15-amp & 20-amp branch circuits supplying outlets installed in dwelling unit kitchens, dining rooms, family rooms, living rooms, parlors, libraries, dens, bedrooms, sunrooms, rec rooms, closets, laundry areas, hallways and similar rooms shall be protected by a listed arc-fault circuit interrupter, combination type, installed to provide protection of the branch circuit. CEC 210.12

21. All 125-volt, 15-amp & 20-amp receptacle outlets shall be listed tamper-resistant receptacles per CEC 406.11.

22. Counter top receptacles in the kitchen, nook pantries, dining rooms and similar areas shall be spaced such that any point along the wall at the counter levle is not more than 2' from a receptacle. any counter space more than 12" wide shall be provided with a receptacle. countertops interrupted by ranges, sinks or other appliances shall be considered separate counters. cec 210.52(c)

23. Per 2022 CEC, Article 210.52(C), receptacles along the counter tops shall be spaced a maximum of 2 feet from the sink(s) and 4 feet on-center. Island and peninsular counter tops with a long dimension of 24 inches or greater shall have at least one receptacle. No point of the wall may be more than 24" from an outlet. Kitchen outlets shall be on at least two separate circuits with ground-fault circuit interrupt protection.

24. Provide dedicated 20-amp circuit for required bathroom outlets, separate from other receptacles, lights, or fans.

25. Provide two dedicated 20-amp branch circuits for small appliance outlets in kitchen at wall and counter space.

26. Provide dedicated individual GFCI protected circuit at dishwasher and garbage disposal, verify in field per manufacture requirements.

27. Provide dedicated 30-amp circuit to dryer per CEC 220.54.

28. Provide UFER ground.

29. Electric vehicle (EV) charging for New Construction 4.106.4.1, For new one- and two-family dwellings and town-houses with attached private garages, install a listed raceway to accommodate a dedicated 208/240-volt branch circuit. The raceway shall not be less than trade size 1 (nominal 1-inch inside diameter). The raceway shall originate at the main service or subpanel and shall terminate into a listed cabinet, box or other enclosure in close proximity to the proposed location of an EV charger. Raceways are required to be continuous at enclosed, inaccessible or concealed areas and spaces. The service panel and/or subpanel shall provide capacity to install a 40-ampere 208/240-volt minimum dedicated branch circuit and space(s) reserved to permit installation of a branch circuit overcurrent protective device. Exception: a raceway is not required if a minimum 40-ampere 208/240-volt dedicated ev branch circuit is installed in close proximity to the proposed location of an ev charger at the time of original construction in accordance with the california electrical code. The service panel or subpanel circuit directory shall identify the overcurrent protective device space(s) reserved for future EV charging as "EV capable". The raceway termination location shall be permanently and visibly marked as "EV capable".

MEP PLAN DETAILS & GENERAL NOTES

N.T.S | 1

Copyright 2025 YOUNG AND BORLIK ARCHITECTS INC. All designs, drawings, and written materials appearing herein, are protected and constitute original and unpublished work of the Architect and may not be revised, re-used, copied, or disclosed without the written consent of the Architect. Equipment manufactured by others is excluded. Drawings and specifications are instruments of architectural service, and shall remain the the property of the Architect. Use is restricted to the site for which they are prepared.

ISSUE LOG

DESIGN REVIEW SUBMITTAL MAY 20, 2025
DR PLAN CHECK RESUBMITTAL JUL. 15, 2025
DR PLAN CHECK RESUBMITTAL OCT. 03, 2025

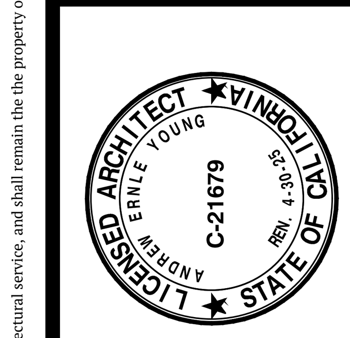

Young & Borlik Architects
4962 EL CAMINO REAL, STE 218
LOS ALTOS, CALIFORNIA 94022
650-688-1950 | YBarchitects.com

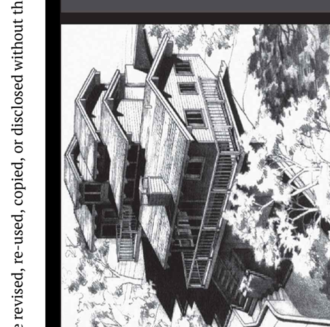

NEW RESIDENCE FOR:
ERIN AND EMILY CONLEY
962 HILLCREST DRIVE
REDWOOD CITY, CA 94062

A.P.N. 058-263-040

CHECKED	DRAWN
AEY	OH, MC

DATE SEP. 23. 2024

JOB # CONLEY

MEP1.0

CALGREEN NOTES:

REFER TO SHEET A0.2.2 & A0.2.3 FOR 2022 CALIFORNIA GREEN BUILDING STANDARDS CODE RESIDENTIAL MANDAOTRY MEASURES, SHEET 1 &2.
1. REFER TO CIVIL SHEETS FOR STORM WATER DRAINAGE AND RETENTION DURING CONSTRUCTION; CALGREEN 4.106.2; A PLAN IS DEVELOPED AND IMPLEMENTED TO MANAGE STORM WATER DRAINAGE DURING CONSTRUCTION.

2. REFER TO CIVIL SHEETS FOR GRADING AND PAVING; CALGREEN 4.106.3; CONSTRUCTION PLANS SHALL INDICATE HOW SITE GRADING OR A DRAINAGE SYSTEM WILL MANAGE ALL SURFACE WATER FLOWS TO KEEP WATER ENTERING BUILDINGS.

3. PROVIDE CAPABILITY FOR ELECTRIC VEHICLE CHARGING, CALGREEN 4.106.4, REFER TO SHEET E2.3 & MEP-GA-PH FOR EV CHARGING STATION.; IN ONE AND TWO FAMILY DWELLINGS AND IN TOWNHOUSES WITH ATTACHED PRIVATE GARAGES AND 3% OF TOTAL PARKING SPACES AS SPECIFIED FOR MULTI-FAMLIY DWELLINGS.

4. ENERGY EFFICIENCY; CALGREEN 4.201.1; BUILDING MEETS OR EXCEEDS THE REQUIREMENTS OF THE CALIFORNIA BUILDING ENERGY EFFICIENCY STANDARDS.

5. WATER EFFICIENCY AND CONSERVATION; CALGREEN DIVISION4.3; REFER TO SHEET A0.2.2 & MEP1.0 PLUMBING NOTE#16 FOR INDOOR WATER USE; CALGREEN 4.303.1; OUTDOOR WATER USE; CALGREEN 4.303.4.

6. ENHANCED DURABILITY AND REDUCED MAINTENANCE; CALGREEN 4.406.1; ANNULAR SPACE AROUND PIPEDS, ELECTRIC CABLES, CONDUITS OR OTHER OPENINGS IN PLATES AT EXTERIOR WALLS SHALL BE PROTECTED AGAINST THE PASSAGE OF RODENTS BY CLOSING SUCH OPENINGS WITH CEMENT MORTAR, CONCRETE MASONRY OR SIMILAR METHOD ACCEPTABLE TO THE ENFORCING AGENCY.

7. CONSTRUCTION WASTE REDUCTION, DISPOSAL AND RECYCLING, CALGREEN 4.408.1; CONSTRUCTION WASTE MANAGEMENT. RECYCLE AND OR SALVAGE FOR REUSE A MINIMUM OF 65% OF THE NON-HAZARDOUS CONSTRUCTION AND DEMOLITION WASTE IN ACCORDANCE WITH EITHER CALGREEN SECTION 4.408.2, 4.408.3 OR 4.408.4. SUGGEST USE ZANKER MATERIAL PROCESSING FACILITY, 675 LOS ESTEROS ROAD, SAN JOSE, CA 95134, PHONE NUMBER 408-263-2385.

8. BUILDING MAINTENANCE AND OPERATION, CALGREEN 4.410.1; GC TO PROVIDE AN OPERATION AND MAINTENANCE MANUAL TO THE BUILDING OCCUPANT OR OWNER.

CALGREEN NOTES (CONTINUED):

9. ENVIRONMENTAL QUALITY
a. FIREPLACE; CALGREEN 4.503.1; ANY INSTALLED GAS FIREPLACE SHALL BE A DIRECT-VENT SEALED-COMBUTION TYPE.
b. POLLUTANT CONTROL
• CALGREEN 4.504.1 DUCT OPENINGS AND OTHER RELATED AIR DISTRIBUTION COMPONENT OPENINGS SHALL BE COVERED DURING CONSTRUCTION.
• CALGREEN 4.504.2.1 ADHESIVES, SEALANTS AND CAULKS SHALL BE COMPLIANT WITH VOC AND OTHER TOXIC COMPOUND LIMITS.
• CALGREEN 4.504.2.2 PAINTS, STAINS AND OTHER COATINGS SHALL BE COMPLIANT WITH VOC LIMITS.
• CALGREEN 4.501.2.3 AEROSOL PAINTS AND COATINGS SHALL BE COMPLIANT WITH PRODUCT WEIGHTED MIR LIMITS FOR ROC AND OTHER TOXIC COMPOUNDS.
• CALGREEN 4.504.2.4 DOCUMENTATION SHALL BE PROVIDED TO VERIFY THAT COMPLIANT VOC LIMIT FINISH MATERIALS HAVE BEEN USED
• CALGREEN 4.504.3 CARPET AND CARPET SYSTEMS SHALL BE COMPLIANT WITH VOC LIMITS
• CALGREEN 4.504.4 80% OF FLOOR AREA RECEIVING RESILIENT FLOORING SHALL COMPLY WITH SPECIFIED VOC CRITERIA.

CALGREEN NOTES (CONTINUED):
• CALGREEN 4.504.5 PARTICLE BOARD, MEDIUM DENSITY FIBRE BOARD (MDF) AND HARDWOOD PLYWOOD USED IN INTERIOR FINISH SYSTEMS SHALL COMPLY WITH LOW FORMALDEHYDE EMISSION STANDARDS.
• REFER TO SHEET A0.2.2 & A0.2.3 FOR TABLE 4.504.1 - ADHESIVE VOC LIMIT; TABLE 4.504.2 - SEALANT VOC LIMIT, TABLE 4.504.3 - VOC CONTECT LIMITS FOR ARCHITECTURAL COATINGS; TABLE 4.504.5 - FORMALDEHYDE LIMITS.

a. INDOOR MOISTURE CONTROL
• CALGREEN 4.505.2 VAPOR RETARDER AND CAPILLARY BREAK IS INSTALLED AT SLAB-ON-GRADE FOUNDATIONS.
• CALGREEN 4.505.3 MOISTURE CONTENT OF BUILDING MATERIALS USED IN WALL AND FLOOR FRAMING IS CHECKED BEFORE ENCLOSURE. WALL AND FLOOR FRAMING SHALL NOT BE ENCLOSED WHEN THE FRAMING MEMBERS EXCEED 19% MOISTURE CONTENT.

b. INDOOR AIR QUALITY AND EXHAUST CALGREEN 4.506.1 BATHROOM EXHAUST FANS. EACH BATHROOM SHALL BE MECHANICALLY VENTILATED AND SHALL COMPLY WITH THE FOLLOWING:
• FANS SHALL BE ENERGY STAR COMPLIANT AND BE DUCTED TO TERMINATE OUTSIDE THE BUILDING.
• UNLESS FUNCTIONING AS A COMPONENT OF A WHOLE HOUSE VENTILATION SYSTEM, FANS MUST BE CONTROLLED BY A HUMIDITY CONTROL. REFER TO SHEET A0.2.3 FOR DETAIL.

f. ENVIRONMENTAL COMFORT. CALGREEN 4.507.2 HEATING AND AIR-CONDITIONING SYSTEM DESIGN. DUCT SYSTEMS ARE SIZED, DESIGNED, AND EQUIPMENT IS SELECTED USING THE FOLLOWING METHODS:

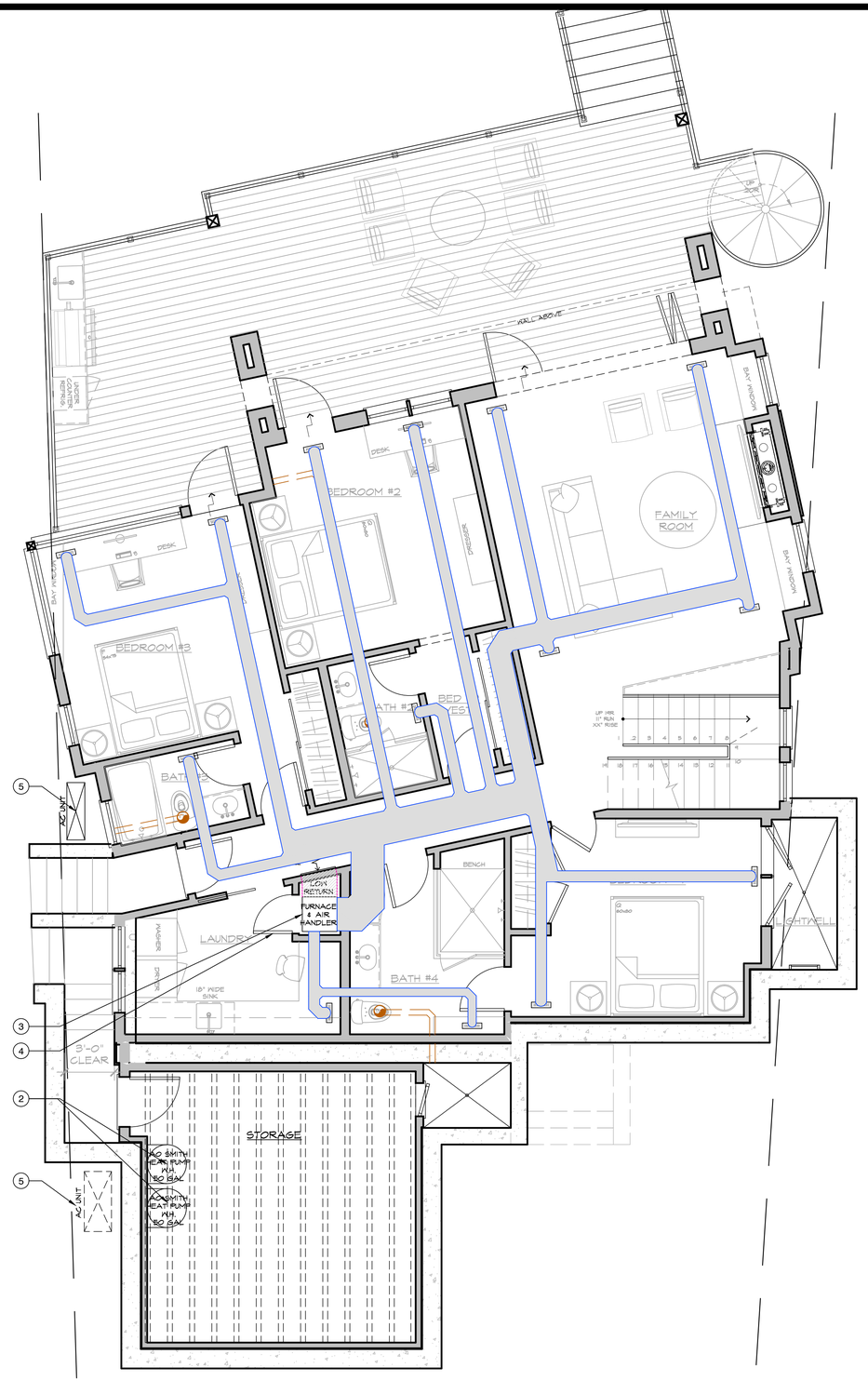

CALGREEN NOTES (CONTINUED):

• THE HEAT LOSS AND HEAT GAIN IS ESTABLISHED ACCORDING TO ANSI/ACCA 2 MANUAL J - 2011 (RESIDENTIAL LOAD CALCULATION), ASHRAE HANDBOOKS OR OTHER EQUIVALENT DESIGN SOFTWARE OR METHODS.
• DUCT SYSTEMS ARE SIZED ACCORDING TO ANSI/ACCA 1 MANUAL D - 2014 (RESIDENTIAL DUCT SYSTEMS), ASHRAE HANDBOOKS OR OTHER EQUIVALENT DESIGN SOFTWARE OR METHODS.
• SELECTED HEATING AND COOLING EQUIPMENT ACCORDING TO ANSI/ACCA 3 MANUAL S - 2014 (RESIDENTIAL EQUIPMENT SELECTION), OR OTHER EQUIVALENT DESIGN SOFTWARE OR METHODS.

10. INSTALLER AND SPECIAL INSPECTOR QUALIFICATIONS
a. QUALIFICATIONS
• CALGREEN 702.1 INSTALLER TRAINING. HVAC SYSTEM INSTALLERS ARE TRAINED AND CERTIFIED IN THE PROPER INSTALLATION OF HVAC SYSTEMS
• CALGREEN 702.2 SPECIAL INSPECTION. SPECIAL INSPECTORS EMPLOYED BY THE ENFORCING AGENCY MUST BE QUALIFIED AND ABLE TO DEMONSTRATE COMPETENCE IN THE DISCIPLINE THEY ARE INSPECTING.
b. VERIFICATIONS
• CALGREEN 703.1 DOCUMENTATION. VERIFICATION OF COMPLIANCE WITH THIS CODE MAY INCLUDE CONSTRUCTION DOCUMENTS, PLANS, SPECIFICATIONS, BUILDER OR INSTALLER CERTIFICATION, INSPECTION REPORTS, OR OTHER METHODS ACCEPTABLE TO THE ENFORCING AGENCY WHICH SON SUBSTANTIAL COMPLIANCE.

FIXTURE SYMBOLS:

HB — HOSE BIBB, ANTI-SIPHON DEVICES ARE REQ'D AT ALL HOSE BIBBS, BOTH INT. AND EXT, EXCEPT THE CLOTHES WASHER CONNECTION. THIS IS TO PREVENT THE POSSIBLE BACKFLOW OF CONTAMINATED WATER INTO THE POTABLE WATER SYSTEM.

H2O — WATER

G — GAS

ENERGY STAR RATED EXHAUST FAN, MIN. 80 CFM, PANASONIC WHISPER GREEN SELECT CEILING FAN CONTROLLED BY HUMIDISTAT AND BE ENERGY STAR RATED. U.N.O. SEPARATE SWITCH WHEN FAN/LIGHT COMBO IS SELECTED. THE FAN MUST BY LISTED AT 3 SONES OR LESS FOR NOISE. SEE SPEC CUT SHEET DETAIL 3/A6.4. THE RATING MUST BE BASED ON A WATER COLUMN OF .25 OR GREATER.

SUPPLY AIR CEILING REGISTER

RETURN AIR LOW @ WALL

GENERAL NOTES:

1. REFER TO ELECTRICAL, MECHANICAL AND PLUMBING NOTES IN SHEET A0.2.1 AND MEP1.0.

2. GAS POWERED 50 GALLON WATER HEATER BY AO SMITH OR EQ. SEE TITLE 24 AND SPECIFICATIONS ON SHEET A6.2.

3. FURNACE IN CLOSET WITH RETURN AIR VENT LOW IN WALL IN HALLWAY.

4. LOUVERED DOOR TO PROVIDE MIN. 100 CFM MAKE UP AIR TO FURNACE CLOSET.

5. AC CONDENSER UNITS.

PRELIMINARY-
NOT YET APPROVED
FOR CONSTRUCTION

N
0' 1' 2' 5' 10'

LOWER LEVEL MECHANICAL / PLUMBING PLAN

1/4" = 1'-0" | 1

ISSUE LOG

DESIGN REVIEW SUBMITTAL MAY 20, 2025
DR PLAN CHECK RESUBMITTAL JUL. 15, 2025
DR PLAN CHECK RESUBMITTAL OCT. 03, 2025

LICENSED ARCHITECT ANDREW ERIC YOUNG C-21679 REN. 4-30-26 STATE OF CALIFORNIA

Young & Borlik Architects
4962 EL CAMINO REAL, STE 218
LOS ALTOS, CALIFORNIA 94022
650-688-1950 | YBarchitects.com

NEW RESIDENCE FOR:
ERIN AND EMILY CONLEY
962 HILLCREST DRIVE
REDWOOD CITY, CA 94062

A.P.N. 058-263-040

CHECKED	DRAWN
AEY	OH, MC

DATE SEP. 23. 2024

JOB # CONLEY

MP2.1

Copyright 2025 YOUNG AND BORLIK ARCHITECTS INC. All designs, drawings, and written materials appearing herein, are protected and constitute original and unpublished work of the Architect and may not be revised, re-used, copied, or disclosed without the written consent of the Architect. Equipment manufactured by others is excluded. Drawings and specifications are instruments of architectural service, and shall remain the the property of the Architect. Use is restricted to the site for which they are prepared.

TITLE 24 COMPLIANCE & REPORTING

BUILDER/INSTALLER MUST SUBMIT AN INSTALLATION CERTIFICATE CF2R AND VERIFICATION DOCUMENTS (HERS) CF-3R.

1. CALCULATED MINIMUM AIRFLOW FOR CONTINUOUS AND/OR INTERMITTENT OPERATION.

2. DETERMINATION OF LOCAL EXHAUST FLOW RATES FOR CONTINUOUS/ INTERMITTENT OPERATION.

3. WHOLE-BUILDING AND LOCAL EXHAUST VENTILATION SYSTEM/DESIGN TYPES.

4. INSTALLED FAN EQUIPMENT MAKE, MODEL AND RATED PERFORMANCE.

5. INSTALLED DUCT SYSTEM DESIGN INFORMATION IF COMPLIANCE IS BEING DEMONSTRATED BY INSPECTION OF THE PRESCRIPTIVE OR MANUFACTURES DESIGN CRITERIA.

6. MEASURED AIRFLOW RATE OF THE INSTALLED SYSTEM IF COMPLIANCE IS BEING DEMONSTRATED BY THE AIRFLOW MEASUREMENT METHOD.

7. CONFIRMATION THAT OTHER REQUIREMENTS GIVEN IN ASHRAE 62.2 HAVE BEEN MET.

8. REFER TO TITLE 24 REPORT FOR A COMPLETE TESTING LIST DETAIL.

DUCTS:
DUCTS MUST BE STEEL EXCEPT IN SINGLE FAMILY AND DUPLEX OCCUPANCIES WHERE THE USE OF STUD AND JOIST SPACES ARE PERMITTED. DUCTS MUST HAVE A MINIMUM CROSS SECTION DIMENSION OF 3" AND MUST HAVE THE SAME AREA AS THE OPENING. EACH DUCT MUST SERVE ONLY THE UPPER OR ONLY THE LOWER OPENING OF A SINGLE ENCLOSURE.

SIZE OF OPENINGS
(701.4.4 TWO PERMANENT OPENING METHOD):
WHERE DIRECTLY COMMUNICATING WITH THE OUTDOORS OR WHERE COMMUNICATING TO THE OUTDOORS THROUGH VERTICAL DUCTS, EACH OPENING SHALL HAVE A MINIMUM FREE AREA OF 1 SQ. IN./ 4,000 BTU / H OF TOTAL INPUT RATING OF ALL EQUIPMENT IN THE ENCLOSURE.

ALL PIPING IN TO BE INSULATED PER TITLE 24 CFIR-PRF-01

COMBUSTION-AIR OPENING OR DUCTS CALCULATION:

DEFINITIONS:
* UNUSUALLY TIGHT CONSTRUCTION: - CONFINED SPACES IN NEWER CONSTRUCTION REQUIRING ALL COMBUSTION AIR TO BE OBTAINED FORM THE OUTSIDE.
* ORDINARY TIGHTNESS: - OPEN SPACES IN OLDER CONSTRUCTION ALLOWING COMBUSTION AIR TO BE OBTAINED FROM THE INSIDE.
* CONFINED SPACES: - AREAS HAVING LESS THAN 50 CUBIC FEET/1000 BTU/H INPUT.

OPENINGS:
EACH ENCLOSURE MUST HAVE TWO OPENINGS, ONE WITHIN 12" OF THE FLOOR AND ONE WITHIN 12" OF THE CEILING. NO MANUAL DAMPERS OR FIRE DAMPERS ARE ALLOWED BUT POWER ACTUATED MOVABLE LOUVERS ARE PERMITTED IF INTERCONNECTED WITH THE MAIN BURNER FUEL SUPPLY VALVE OF EACH APPLIANCE. A 1/4" MESH SCREEN IS USUALLY REQUIRED FOR OPENING PROTECTION.

SOURCES:
AREAS HAVING LESS THAN 50 CUBIC FEET/1000 BTU/H INPUT ARE CONFINED SPACES AND REQUIRE COMBUSTION AIR TO BE OBTAINED FROM THE OUTSIDE. COMBUSTION AIR FROM THE OUTSIDE SHALL BE DIRECT OR DUCTED AND MAY BE OBTAINED FORM SOME ATTICS AND UNDER FLOOR AREAS. PROHIBITED IS COMBUSTION AIR OBTAINED FROM HAZARDOUS LOCATIONS, REFRIGERATION ROOMS, AREAS WITH POWER VENTS AND AREAS WHERE FLAMMABLE VAPOR, DUST OR LINT IS PRESENT. KITCHEN VENT FANS AND CLOTHES DRYERS SHOULD BE CONSIDERED.

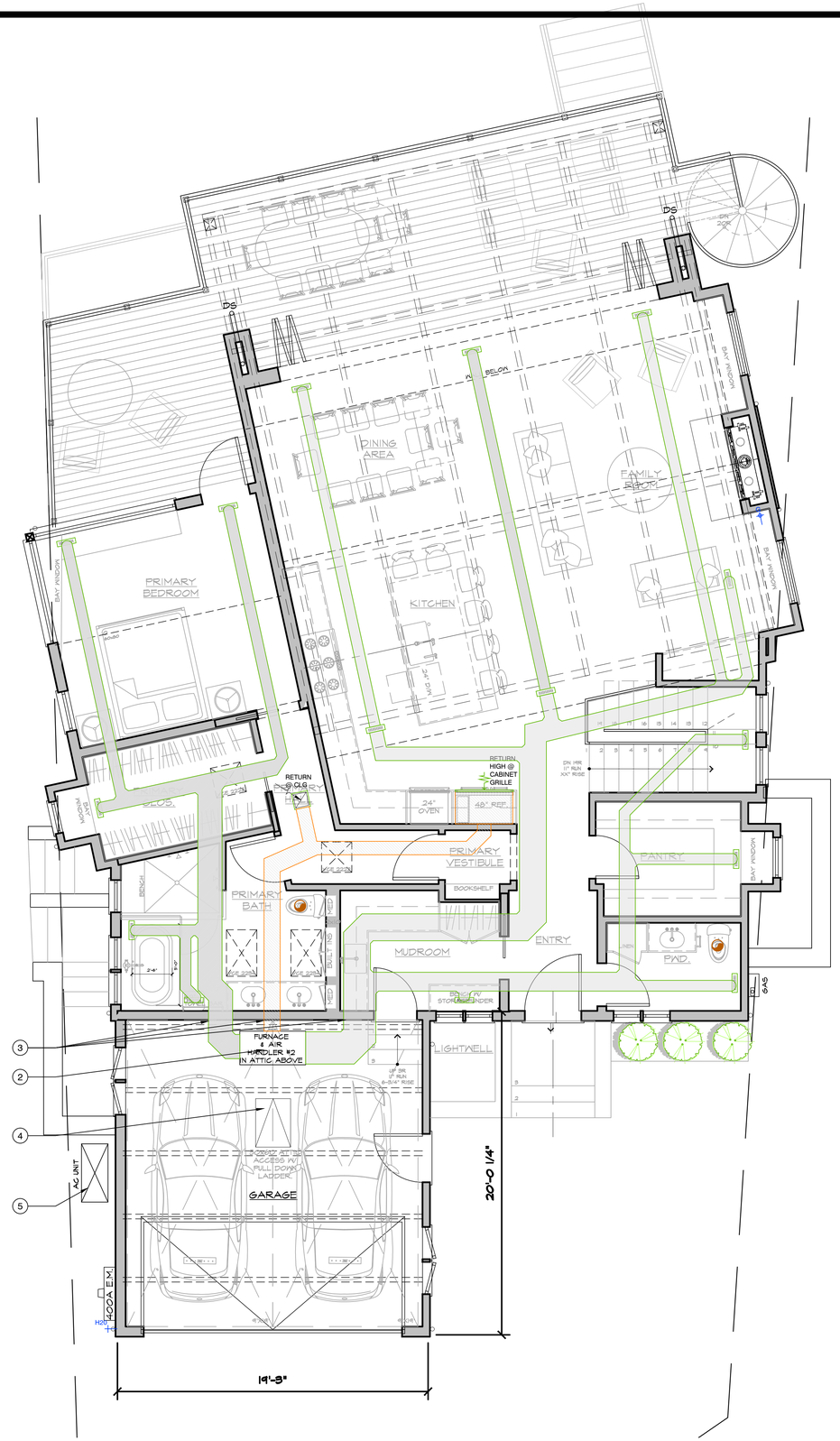

FIXTURE SYMBOLS:

HB — HOSE BIBB, ANTI-SIPHON DEVICES ARE REQ'D AT ALL HOSE BIBBS, BOTH INT. AND EXT., EXCEPT THE CLOTHES WASHER CONNECTION. THIS IS TO PREVENT THE POSSIBLE BACKFLOW OF CONTAMINATED WATER INTO THE POTABLE WATER SYSTEM.

H20 — WATER

G — GAS

ENERGY STAR RATED EXHAUST FAN, MIN. 80 CFM, PANASONIC WHISPER GREEN SELECT CEILING FAN CONTROLLED BY HUMIDISTAT AND BE ENERGY STAR RATED. U.N.O. SEPARATE SWITCH WHEN FAN/LIGHT COMBO IS SELECTED. THE FAN MUST BY LISTED AT 3 SONES OR LESS FOR NOISE. SEE SPEC CUT SHEET DETAIL 3/A6.4. THE RATING MUST BE BASED ON A WATER COLUMN OF .25 OR GREATER.

SUPPLY AIR CEILING REGISTER

RETURN AIR CEILING REGISTER IN HALLWAY

RETURN AIR HIGH @ CABINET FACE GRILLE ABOVE REFRIGERATOR

GENERAL NOTES:

1. REFER TO ELECTRICAL, MECHANICAL AND PLUMBING NOTES IN SHEET A0.2.1 AND MEP1.0

2. FURNACE/AIR HANDLER LOCATED IN ATTIC ABOVE GARAGE.

3. THE PRIMARY DWELLING AND THE GARAGE, INCLUDING THEIR ATTIC AREAS, NEED TO BE SEPARATED BY A FIRE-RESISTANT BARRIER. PENETRATIONS THROUGH THE FIRE-RATED SEPARATION MUST BE SEALED WITH AN APPROVED MATERIAL TO PREVENT THE PASSAGE OF FLAMES AND SMOKE. DUCTING TO MADE OF MIN. 26 GAGE (0.48 MM) SHEET STEEL OR OTHER APPROVED MATERIAL.

4. 30" X 60" ATTIC ACCESS.

5. AC CONDENSER UNIT.

PRELIMINARY-
NOT YET APPROVED
FOR CONSTRUCTION

0' 1' 2' 5' 10'

UPPER LEVEL MECHANICAL / PLUMBING PLAN

1/4" = 1'-0" | 1

ISSUE LOG

DESIGN REVIEW SUBMITTAL	MAY 20, 2025
DR PLAN CHECK RESUBMITTAL	JUL. 15, 2025
DR PLAN CHECK RESUBMITTAL	OCT. 03, 2025

LICENSED ARCHITECT ANDREW ERNLE YOUNG C-21679 REN. 4-30-26 STATE OF CALIFORNIA

Young & Borlik Architects
4962 EL CAMINO REAL, STE 218
LOS ALTOS, CALIFORNIA 94022
650-688-1950 | YBarchitects.com

NEW RESIDENCE FOR:
ERIN AND EMILY CONLEY
962 HILLCREST DRIVE
REDWOOD CITY, CA 94062

A.P.N. 058-263-040

CHECKED AEY	DRAWN OH, MC
DATE SEP. 23. 2024	
JOB # CONLEY	

MP2.2

Copyright 2025 YOUNG AND BORLIK ARCHITECTS INC. All designs, drawings, and written materials appearing herein, are protected and constitute original and unpublished work of the Architect and may not be revised, re-used, copied, or disclosed without the written consent of the Architect. Equipment manufactured by others is excluded. Drawings and specifications are instruments of architectural service, and shall remain the the property of the Architect. Use is restricted to the site for which they are prepared.

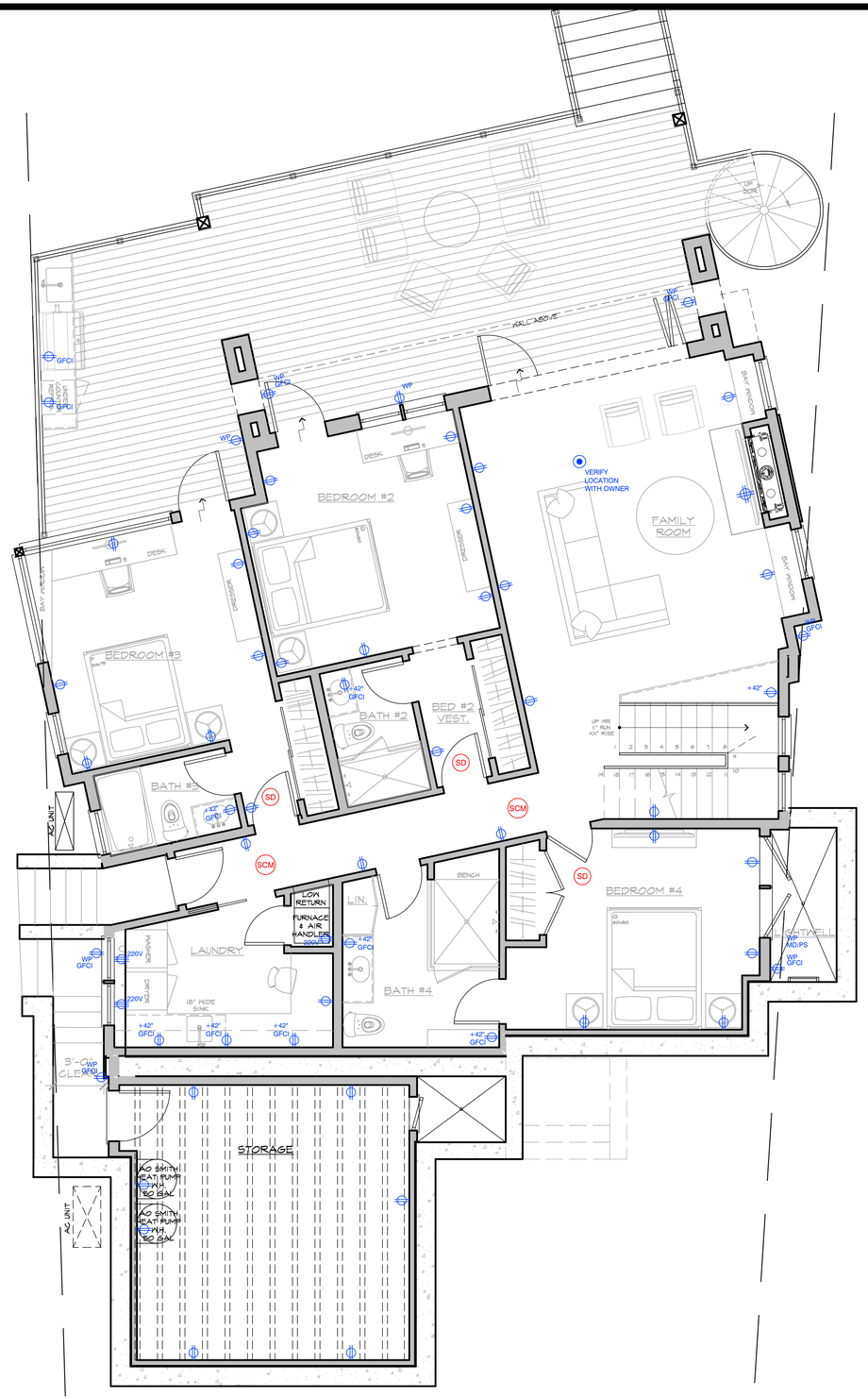

FIXTURE SYMBOLS:

SD — CEILING MOUNTED PHOTOELECTRIC/ IONIZATION DUAL SENSOR SMOKE DETECTOR TO BE INSTALLED IN EVERY BEDROOM, IN THE HALLWAYS LEADING TO THE BEDROOMS AND ON EACH LEVEL OF THE HOME, INCLUDING THE BASEMENT. THEY ARE TO BE HARDWIRED AND INTERCONNECTED FOR ALARM W/ BATTERY BACKUP.

CM — CEILING MOUNTED PHOTOELECTRIC/ DUAL SENSOR CARBON MONOXIDE DETECTOR TO BE INSTALLED OUTSIDE OF EACH SLEEPING AREA AND ON EVERY LEVEL OF THE HOME INCLUDING THE BASEMENT. THEY ARE TO BE HARDWIRED AND INTERCONNECTED FOR ALARM W/ BATTERY BACKUP.

SCM — SMOKE & CARBON MONOXIDE DETECTOR COMBO. TO BE INSTALLED IN THE HALLWAY AND ON EACH LEVEL OF THE HOME, INCLUDING THE BASEMENT. THEY ARE TO BE HARDWIRED AND INTERCONNECTED FOR ALARM W/ BATTERY BACKUP.

SMOKE ALARMS / CARBON MONOXIDE ALARM NOTE:
1. PROVIDE SMOKE AND CARBON MONOXIDE ALARMS PER SECTION R314 & R315

2. SMOKE ALARMS SHALL BE TESTED AND MAINTAINED IN ACCORDANCE WITH THE MANUFACTURER'S INSTRUCTIONS. SMOKE ALARMS THAT NO LONGER FUNCTION SHALL BE REPLACED. SMOKE ALARMS INSTALLED IN ONE AND TWO FAMILY DWELLINGS SHALL BE REPLACED AFTER 10 YEARS FROM THE DATE OF MANUFACTURE MARKED ON TE UNIT, OR IF THE DATE OF MANUFACTURE CANNOT BE DETERMINED.

3. SMOKE ALARMS SHALL BE INSTALLED A MINIMUM OF 20' HORIZONTAL DISTANCE FROM A PERMANENTLY INSTALLED COOKING APPLIANCE. SMOKE ALARMS INSTALLED WITHIN 20' OF A KITCHEN, BATHROOM OR ROOM CONTAINING A FIREPLACE OR WOOD BURNING STOVE SHALL BE OF THE PHOTOELECTRIC TYPE.

4. FOR PLACEMENT OF SMOKE ALARMS AND CARBON MONOXIDE ALARMS IN ROOMS W/ VARIATIONS IN CEILING HEIGHT (IE:SLOPED, PITCHED, ETC.), REFER TO MANUFACTURES GUIDELINES FOR PROPER PLACEMENT.

STANDARD DUPLEX

GFCI — GROUND FAULT CIRCUIT INTERRUPTER DUPLEX

WP — WEATHER PROOF, DAMP RESISTANT, VERIFY LOCATIONS OF REQUIRED IN-USE COVERS

220V — 220V OUTLET

+XX" — HORIZONTAL INSTALLED DUPLEX @ NOTED ELEVATION OR PER TILE @ BACK SPLASH LAYOUT. REQUIRED OUTLET SERVES THE COUNTERTOP NEEDS TO BE WITHIN 20" ABOVE THE COUNTERTOP OR WITHIN 12" BELOW THE COUNTERTOP

USB — DUPLEX WITH USB PORT

FOUR-PLEX OUTLET

H — OUTLET FOR HOLIDAY LIGHTS ON HOLIDAY SWITCH @ BOXED SOFFIT @ EAVE. GFCI, WEATHER PROOF VERIFY WITH OWNER

DEDICATED CIRCUITS FOR FIXED APPLIANCES (UNDERCOUNTER)

DISP — HALF-SWITCHED GFCI OUTLET FOR IN-SINK DISPOSAL W/ AIR SWITCH @ COUNTERTOP, TYP.

FLOOR MOUNTED DUPLEX W/ RECESSED COVER OR JUNCTION BOX.

CEILING MOUNTED DUPLEX W/ RECESSED COVER OR JUNCTION BOX.

OUTLETS NOTE:
ALL 120-VOLT, SINGLE PHASE, 15-amp & 20-amp BRANCH CIRCUITS SUPPLYING OUTLETS INSTALLED IN DWELLING UNIT KITCHENS, DINING ROOMS, FAMILY ROOMS, LIVING ROOMS, PARLORS, LIBRARIES, DENS, BEDROOMS, SUNROOMS, REC ROOMS, CLOSETS, LAUNDRY AREAS, HALLWAYS AND SIMILAR ROOMS SHALL BE PROTECTED BY A LISTED ARC-FAULT CIRCUIT INTERRUPTER, COMBINATION TYPE, INSTALLED TO PROVIDE PROTECTION OF THE BRANCH CIRCUIT. CEC 210.12

J — JUNCTION BOX

S — WHOLE HOUSE SECURITY, SYSTEM KEYPAD

C — CHIME

DOORBELL

VERIFY WIRELESS BASE, REPEATER LOCATION WITH OWNER, AND OTHER REMOTE WIRELESS SYSTEM FOR HIGH / LOW VOLTAGE.

TELEPHONE OR USB CHARGING STATION

T.V. / CABLE / INTERNET

SP — SPEAKER

PRELIMINARY - NOT YET APPROVED FOR CONSTRUCTION

0' 1' 2' 5' 10'

N

LOWER LEVEL ELECTRICAL PLAN

1/4" = 1'-0"

1

ISSUE LOG

DESIGN REVIEW SUBMITTAL	MAY 20, 2025
DR PLAN CHECK RESUBMITTAL	JUL. 15, 2025
DR PLAN CHECK RESUBMITTAL	OCT. 03, 2025

LICENSED ARCHITECT ERIK YOUNG C-21679 REN. 4.30.26 STATE OF CALIFORNIA

Young & Borlik Architects
4962 EL CAMINO REAL, STE 218
LOS ALTOS, CALIFORNIA 94022
650-688-1950 | YBarchitects.com

NEW RESIDENCE FOR:
ERIN AND EMILY CONLEY
962 HILLCREST DRIVE
REDWOOD CITY, CA 94062

A.P.N. 058-263-040

CHECKED	DRAWN
AEY	OH, MC

DATE SEP. 23. 2024

JOB # CONLEY

E2.1

Copyright 2025 YOUNG AND BORLIK ARCHITECTS INC. All designs, drawings, and written materials appearing herein, are protected and constitute original and unpublished work of the Architect and may not be revised, re-used, copied, or disclosed without the written consent of the Architect. Equipment manufactured by others is excluded. Drawings and specifications are instruments of architectural service, and shall remain the the property of the Architect. Use is restricted to the site for which they are prepared.

FIXTURE SYMBOLS:

SD — CEILING MOUNTED PHOTOELECTRIC/ IONIZATION DUAL SENSOR SMOKE DETECTOR TO BE INSTALLED IN EVERY BEDROOM, IN THE HALLWAYS LEADING TO THE BEDROOMS AND ON EACH LEVEL OF THE HOME, INCLUDING THE BASEMENT. THEY ARE TO BE HARDWIRED AND INTERCONNECTED FOR ALARM W/ BATTERY BACKUP.

CM — CEILING MOUNTED PHOTOELECTRIC/ DUAL SENSOR CARBON MONOXIDE DETECTOR TO BE INSTALLED OUTSIDE OF EACH SLEEPING AREA AND ON EVERY LEVEL OF THE HOME INCLUDING THE BASEMENT. THEY ARE TO BE HARDWIRED AND INTERCONNECTED FOR ALARM W/ BATTERY BACKUP.

SCM — SMOKE & CARBON MONOXIDE DETECTOR COMBO. TO BE INSTALLED IN THE HALLWAY AND ON EACH LEVEL OF THE HOME, INCLUDING THE BASEMENT. THEY ARE TO BE HARDWIRED AND INTERCONNECTED FOR ALARM W/ BATTERY BACKUP.

SMOKE ALARMS / CARBON MONOXIDE ALARM NOTE:
1. PROVIDE SMOKE AND CARBON MONOXIDE ALARMS PER SECTION R314 & R315

2. SMOKE ALARMS SHALL BE TESTED AND MAINTAINED IN ACCORDANCE WITH THE MANUFACTURER'S INSTRUCTIONS. SMOKE ALARMS THAT NO LONGER FUNCTION SHALL BE REPLACED. SMOKE ALARMS INSTALLED IN ONE AND TWO FAMILY DWELLINGS SHALL BE REPLACED AFTER 10 YEARS FROM THE DATE OF MANUFACTURE MARKED ON TE UNIT, OR IF THE DATE OF MANUFACTURE CANNOT BE DETERMINED.

3. SMOKE ALARMS SHALL BE INSTALLED A MINIMUM OF 20' HORIZONTAL DISTANCE FROM A PERMANENTLY INSTALLED COOKING APPLIANCE. SMOKE ALARMS INSTALLED WITHIN 20' OF A KITCHEN, BATHROOM OR ROOM CONTAINING A FIREPLACE OR WOOD BURNING STOVE SHALL BE OF THE PHOTOELECTRIC TYPE.

4. FOR PLACEMENT OF SMOKE ALARMS AND CARBON MONOXIDE ALARMS IN ROOMS W/ VARIATIONS IN CEILING HEIGHT (IE:SLOPED, PITCHED, ETC.), REFER TO MANUFACTURES GUIDELINES FOR PROPER PLACEMENT.

STANDARD DUPLEX

GFCI — GROUND FAULT CIRCUIT INTERRUPTER DUPLEX

WP — WEATHER PROOF, DAMP RESISTANT, VERIFY LOCATIONS OF REQUIRED IN-USE COVERS

220V — 220V OUTLET

+XX" — HORIZONTAL INSTALLED DUPLEX @ NOTED ELEVATION OR PER TILE @ BACK SPLASH LAYOUT. REQUIRED OUTLET SERVES THE COUNTERTOP NEEDS TO BE WITHIN 20" ABOVE THE COUNTERTOP OR WITHIN 12" BELOW THE COUNTERTOP

USB — DUPLEX WITH USB PORT

FOUR-PLEX OUTLET

H — OUTLET FOR HOLIDAY LIGHTS ON HOLIDAY SWITCH @ BOXED SOFFIT @ EAVE. GFCI, WEATHER PROOF VERIFY WITH OWNER

DEDICATED CIRCUITS FOR FIXED APPLIANCES (UNDERCOUNTER)

DISP — HALF-SWITCHED GFCI OUTLET FOR IN-SINK DISPOSAL W/ AIR SWITCH @ COUNTERTOP, TYP.

FLOOR MOUNTED DUPLEX W/ RECESSED COVER OR JUNCTION BOX.

CEILING MOUNTED DUPLEX W/ RECESSED COVER OR JUNCTION BOX.

OUTLETS NOTE:
ALL 120-VOLT, SINGLE PHASE, 15-amp & 20-amp BRANCH CIRCUITS SUPPLYING OUTLETS INSTALLED IN DWELLING UNIT KITCHENS, DINING ROOMS, FAMILY ROOMS, LIVING ROOMS, PARLORS, LIBRARIES, DENS, BEDROOMS, SUNROOMS, REC ROOMS, CLOSETS, LAUNDRY AREAS, HALLWAYS AND SIMILAR ROOMS SHALL BE PROTECTED BY A LISTED ARC-FAULT CIRCUIT INTERRUPTER, COMBINATION TYPE, INSTALLED TO PROVIDE PROTECTION OF THE BRANCH CIRCUIT. CEC 210.12

J — JUNCTION BOX

S — WHOLE HOUSE SECURITY, SYSTEM KEYPAD

C — CHIME

DOORBELL

VERIFY WIRELESS BASE, REPEATER LOCATION WITH OWNER, AND OTHER REMOTE WIRELESS SYSTEM FOR HIGH / LOW VOLTAGE.

TELEPHONE OR USB CHARGING STATION

T.V. / CABLE / INTERNET

SP — SPEAKER

PRELIMINARY-
NOT YET APPROVED
FOR CONSTRUCTION

0' 1' 2' 5' 10'

UPPER LEVEL ELECTRICAL PLAN

1/4" = 1'-0"

1

ISSUE LOG

DESIGN REVIEW SUBMITTAL	MAY 20, 2025
DR PLAN CHECK RESUBMITTAL	JUL. 15, 2025
DR PLAN CHECK RESUBMITTAL	OCT. 03, 2025

LICENSED ARCHITECT ERIC YOUNG C-21679 STATE OF CALIFORNIA

Young & Borlik Architects
4962 EL CAMINO REAL, STE 218
LOS ALTOS, CALIFORNIA 94022
650-688-1950 | YBarchitects.com

NEW RESIDENCE FOR:
ERIN AND EMILY CONLEY
962 HILLCREST DRIVE
REDWOOD CITY, CA 94062

A.P.N. 058-263-040

CHECKED	DRAWN
AEY	OH, MC

DATE SEP. 23. 2024

JOB # CONLEY

E2.2

Copyright 2023 YOUNG AND BORLIK ARCHITECTS INC. All designs, drawings, and written materials appearing herein, are protected and constitute original and unpublished work of the Architect and may not be revised, re-used, copied, or disclosed without the written consent of the Architect. Equipment manufactured by others is excluded. Drawings and specifications are instruments of architectural service, and shall remain the the property of the Architect. Use is restricted to the site for which they are prepared.

KEY NOTES:

1. ALL EXTERIOR LIGHTS TO BE DOWNLIT. SEE EXTERIOR LIGHT SPECIFICATIONS ON SHEET A6.4

FIXTURE SYMBOLS:

- SINGLE-POLE SWITCH
- THREE-WAY SWITCH
- FOUR-WAY SWITCH
- JAMB SWITCH
- SWITCH W/ HUMIDISTAT
- SWITCH W/ TIMER
- MANUAL-ON VACANCY SENSOR SENSOR-OFF SWITCH
- DIMMER SWITCH
- DIMMER THREE-WAY SWITCH
- DIMMER FOUR-WAY SWITCH
- WP — WATER PROOF OR DAMP RESISTANT
- MD/PS — MOTION DETECTOR ON, TIMER OFF, MANUAL ON/OFF OVERRIDE AND PHOTOCONTROL SWITCH
- 4" RECESSED CAN LIGHT, I.C. RATED HIGH EFFICACY BULB. FIXTURES INSTALLED IN THE SHOWER OR OVER TUB MUST BE SUITABLE FOR DAMP LOCATION AND HAVE A PRISMATIC LENS IN SHOWER.
- 4" DIRECTIONAL (EYEBALL) RECESSED, I.C. RATED HIGH EFFICACY BULB.
- SURFACE MOUNT FIXTURE
- DECO — CEILING HUNG PENDANT OR CHANDELIER, DECORATIVE LIGHT FIXTURE
- WALL MOUNTED FIXTURE
- LED UNDER CABINET LIGHT — UNDERCABINET LIGHT FIXTURE
- HIGH EFFICACY TUBE FIXTURE
- DIRECTIONAL SPOTLIGHT OR FLOOD LIGHTS
- CEILING FAN, LIGHT COMBO ("L" FOR LIGHTS) W/ REMOTE CONTROL. PROVIDE SEPARATE SWITCHES FOR FAN AND LIGHT.
- TRACK LIGHTING
- EXHAUST FAN, MIN. 80 CFM, PANASONIC WHISPER GREEN SELECT CEILING FAN CONTROLLED BY HUMIDISTAT AND BE ENERGY STAR RATED, OR EQ. SEPARATE SWITCH WHEN FAN/LIGHT COMBO IS SPEC'D. FAN ON TIMER, TYP. U.N.O. THE FAN MUST BY LISTED AT 3 SONES OR LESS FOR NOISE. SEE SPEC ON THIS SHEET. THE RATING MUST BE BASED ON A WATER COLUMN OF .25 OR GREATER.
- HSTAT — HUMIDISTAT

ALL LIGHTS INSTALLED IN THIS HOUSE ARE TO BE HIGH EFFICACY LIGHTS. REFER TO TABLE 150-A ON SHEET LS2.1 FOR CLASSIFICATION.

TABLE 150.0-A
CLASSIFICATION OF HIGH LUMINOUS EFFICACY LIGHT SOURCES

HIGH-EFFICACY LIGHT SOURCES Light sources shall comply with one of the columns below:	
Light sources in this column, other than those installed in ceiling recessed downlight luminaires, are classified as high efficacy and are **not** required to comply with Reference Joint Appendix JA8.	Light sources in this column are only considered to be high efficacy if they are certified to the Commission as High Efficacy Light Sources in accordance with Reference Joint Appendix JA8 and marked as required by JA8.
1. LED light sources installed outdoors. 2. Inseparable solid state lighting (SSL) luminaires containing colored light sources that are installed to provide decorative lighting. 3. Pin-based linear fluorescent or compact fluorescent light sources using electronic ballasts. 4. High intensity discharge (HID) light sources including pulse start metal halide and high pressure sodium light sources. 5. Luminaires with hardwired high frequency generator and induction lamp. 6. Ceiling fan light kits subject to federal appliance regulations.	7. All light sources installed in ceiling recessed downlight luminaires. Note that ceiling recessed downlight luminaires shall not have screw bases regardless of lamp type as described in Section 150.0(k)1C. 8. Any light source not otherwise listed in this table.

PRELIMINARY-
NOT YET APPROVED
FOR CONSTRUCTION

0' 1' 2' 5' 10'

N

LOWER LEVEL LIGHTING / SWITCH PLAN

1/4" = 1'-0" | 1

ISSUE LOG

DESIGN REVIEW SUBMITTAL	MAY 20, 2025
DR PLAN CHECK RESUBMITTAL	JUL. 15, 2025
DR PLAN CHECK RESUBMITTAL	OCT. 03, 2025

LICENSED ARCHITECT ANDREW ERNLE YOUNG C-21679 REN. 4-30-26 STATE OF CALIFORNIA

Young & Borlik Architects
4962 EL CAMINO REAL, STE 218
LOS ALTOS, CALIFORNIA 94022
650-688-1950 | YBarchitects.com

NEW RESIDENCE FOR:
ERIN AND EMILY CONLEY
962 HILLCREST DRIVE
REDWOOD CITY, CA 94062

A.P.N. 058-263-040

CHECKED	DRAWN
AEY	OH, MC

DATE SEP. 23. 2024

JOB # CONLEY

LS2.1

Copyright 2025 YOUNG AND BORLIK ARCHITECTS INC. All designs, drawings, and written materials appearing herein, are protected and constitute original and unpublished work of the Architect and may not be revised, re-used, copied, or disclosed without the written consent of the Architect. Equipment manufactured by others is excluded. Drawings and specifications are instruments of architectural service, and shall remain the the property of the Architect. Use is restricted to the site for which they are prepared.

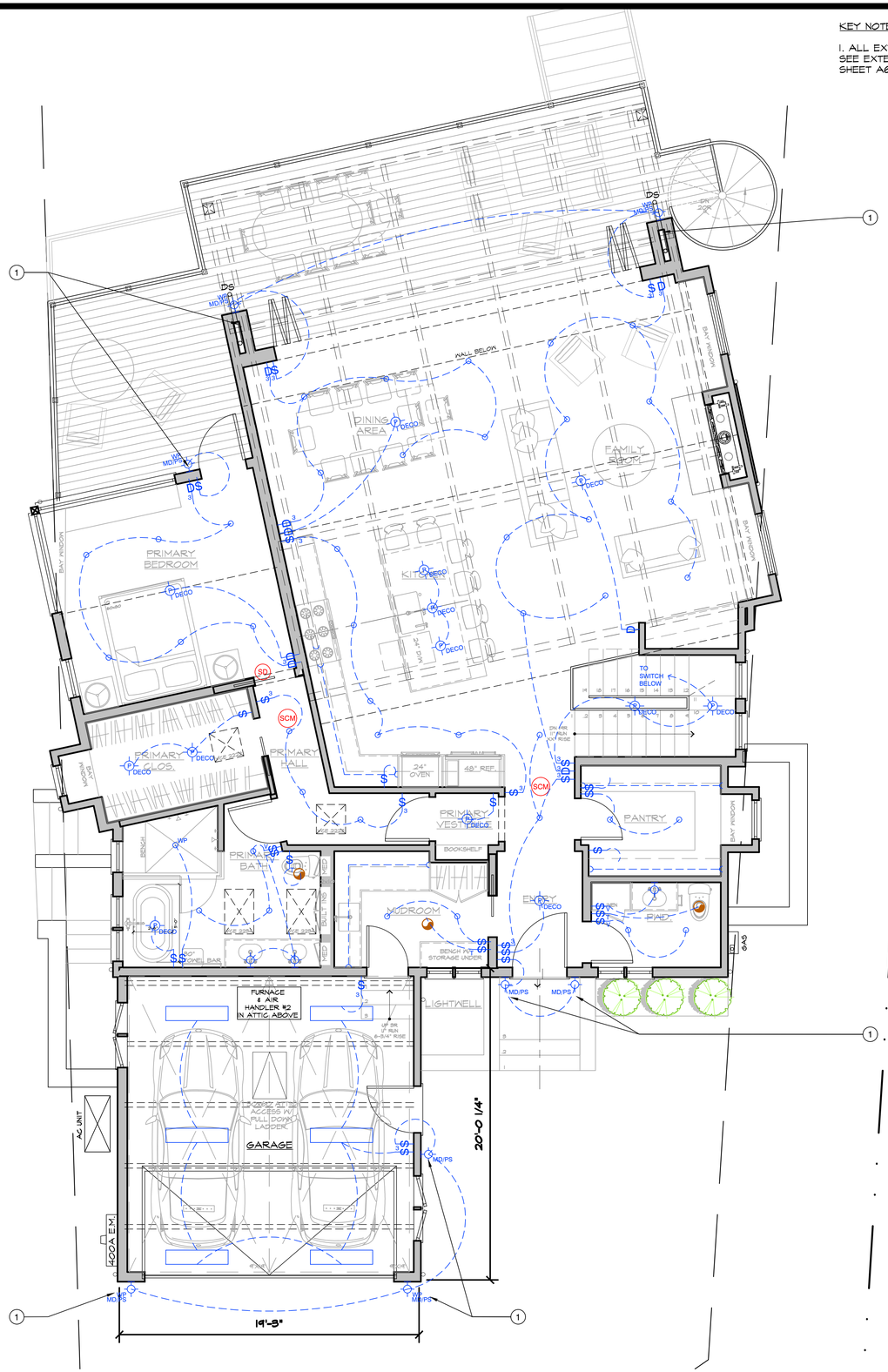

KEY NOTES:

1. ALL EXTERIOR LIGHTS TO BE DOWNLIT. SEE EXTERIOR LIGHT SPECIFICATIONS ON SHEET A6.4

FIXTURE SYMBOLS:

$	SINGLE-POLE SWITCH
$3	THREE-WAY SWITCH
$4	FOUR-WAY SWITCH
$J	JAMB SWITCH
$H	SWITCH W/ HUMIDISTAT
$T	SWITCH W/ TIMER
$V	MANUAL-ON VACANCY SENSOR SENSOR-OFF SWITCH
D	DIMMER SWITCH
D3	DIMMER THREE-WAY SWITCH
D4	DIMMER FOUR-WAY SWITCH
WP	WATER PROOF OR DAMP RESISTANT
MD/PS	MOTION DETECTOR ON, TIMER OFF, MANUAL ON/OFF OVERRIDE AND PHOTOCONTROL SWITCH
	4" RECESSED CAN LIGHT, I.C. RATED HIGH EFFICACY BULB. FIXTURES INSTALLED IN THE SHOWER OR OVER TUB MUST BE SUITABLE FOR DAMP LOCATION AND HAVE A PRISMATIC LENS IN SHOWER.
	4" DIRECTIONAL (EYEBALL) RECESSED, I.C. RATED HIGH EFFICACY BULB.
	SURFACE MOUNT FIXTURE
P DECO	CEILING HUNG PENDANT OR CHANDELIER, DECORATIVE LIGHT FIXTURE
	WALL MOUNTED FIXTURE
LED UNDER CABINET LIGHT	UNDERCABINET LIGHT FIXTURE
	HIGH EFFICACY TUBE FIXTURE
	DIRECTIONAL SPOTLIGHT OR FLOOD LIGHTS
L	CEILING FAN, LIGHT COMBO ("L" FOR LIGHTS) W/ REMOTE CONTROL. PROVIDE SEPARATE SWITCHES FOR FAN AND LIGHT.
	TRACK LIGHTING
	EXHAUST FAN, MIN. 80 CFM, PANASONIC WHISPER GREEN SELECT CEILING FAN CONTROLLED BY HUMIDISTAT AND BE ENERGY STAR RATED, OR EQ. SEPARATE SWITCH WHEN FAN/LIGHT COMBO IS SPEC'D. FAN ON TIMER, TYP. U.N.O. THE FAN MUST BY LISTED AT 3 SONES OR LESS FOR NOISE. SEE SPEC ON THIS SHEET. THE RATING MUST BE BASED ON A WATER COLUMN OF .25 OR GREATER.
HSTAT	HUMIDISTAT

ALL LIGHTS INSTALLED IN THIS HOUSE ARE TO BE HIGH EFFICACY LIGHTS. REFER TO TABLE 150-A ON SHEET LS2.1 FOR CLASSIFICATION.

PRELIMINARY- NOT YET APPROVED FOR CONSTRUCTION

0' 1' 2' 5' 10'

N

UPPER LEVEL LIGHTING / SWITCH PLAN

1/4" = 1'-0"

1

ISSUE LOG

DESIGN REVIEW SUBMITTAL MAY 20, 2025
DR PLAN CHECK RESUBMITTAL JUL. 15, 2025
DR PLAN CHECK RESUBMITTAL OCT. 03, 2025

LICENSED ARCHITECT ANDREW ERNLE YOUNG C-21679 REN. 4-30-26 STATE OF CALIFORNIA

Young & Borlik Architects
4962 EL CAMINO REAL, STE 218
LOS ALTOS, CALIFORNIA 94022
650-688-1950 | YBarchitects.com

NEW RESIDENCE FOR:
ERIN AND EMILY CONLEY
962 HILLCREST DRIVE
REDWOOD CITY, CA 94062

A.P.N. 058-263-040

CHECKED	DRAWN
AEY	OH, MC

DATE SEP. 23. 2024

JOB # CONLEY

LS2.2

Copyright 2025 YOUNG AND BORLIK ARCHITECTS INC. All designs, drawings, and written materials appearing herein, are protected and constitute original and unpublished work of the Architect and may not be revised, re-used, copied, or disclosed without the written consent of the Architect. Equipment manufactured by others is excluded. Drawings and specifications are instruments of architectural service, and shall remain the the property of the Architect. Use is restricted to the site for which they are prepared.

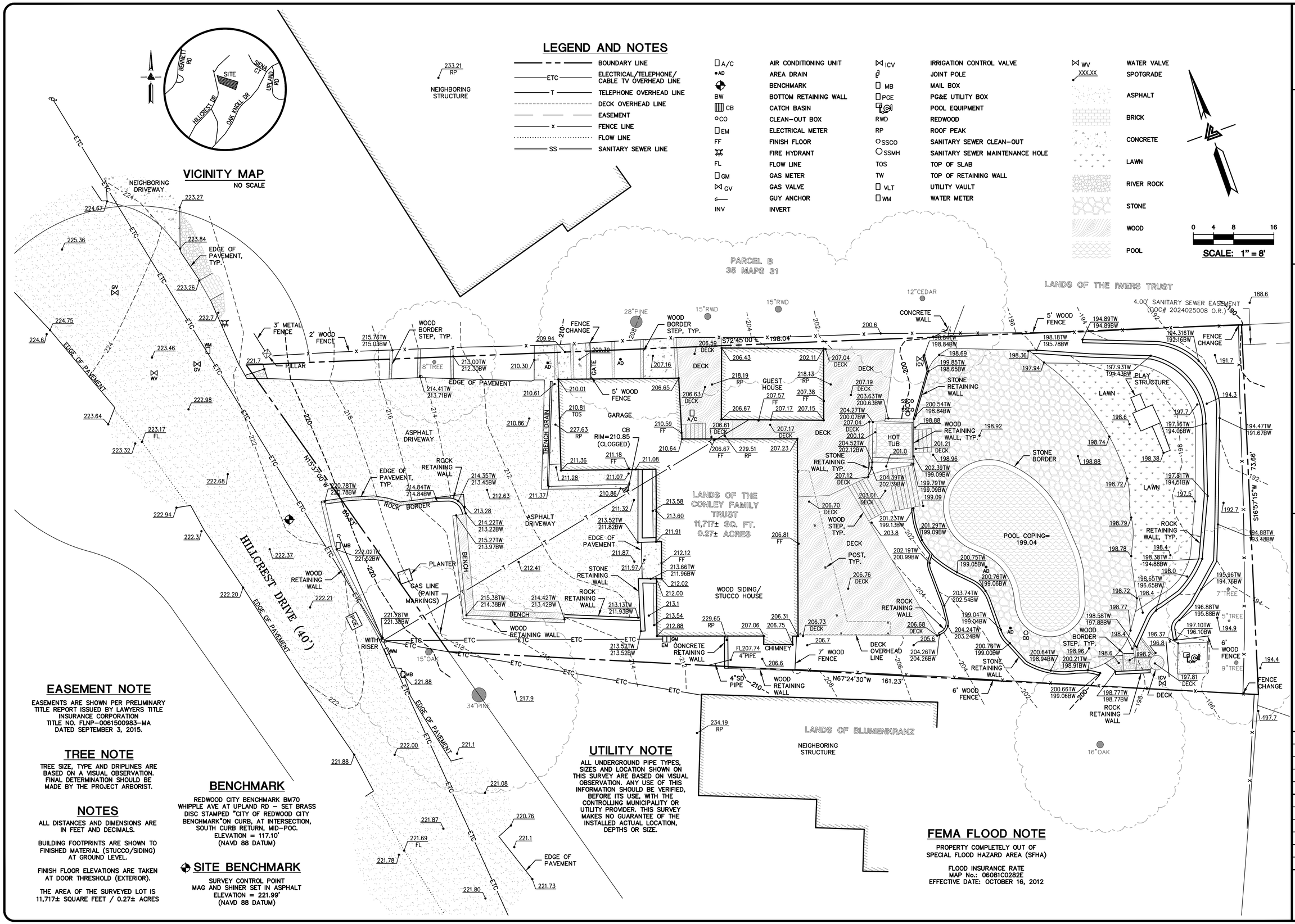

EASEMENT NOTE

EASEMENTS ARE SHOWN PER PRELIMINARY TITLE REPORT ISSUED BY LAWYERS TITLE INSURANCE CORPORATION TITLE NO. FLNP-0061500983-MA DATED SEPTEMBER 3, 2015.

TREE NOTE

TREE SIZE, TYPE AND DRIPLINES ARE BASED ON A VISUAL OBSERVATION. FINAL DETERMINATION SHOULD BE MADE BY THE PROJECT ARBORIST.

NOTES

ALL DISTANCES AND DIMENSIONS ARE IN FEET AND DECIMALS.

BUILDING FOOTPRINTS ARE SHOWN TO FINISHED MATERIAL (STUCCO/SIDING) AT GROUND LEVEL.

FINISH FLOOR ELEVATIONS ARE TAKEN AT DOOR THRESHOLD (EXTERIOR).

THE AREA OF THE SURVEYED LOT IS 11,717± SQUARE FEET / 0.27± ACRES

BENCHMARK

REDWOOD CITY BENCHMARK BM70
WHIPPLE AVE AT UPLAND RD – SET BRASS DISC STAMPED "CITY OF REDWOOD CITY BENCHMARK"ON CURB, AT INTERSECTION, SOUTH CURB RETURN, MID-POC.
ELEVATION = 117.10'
(NAVD 88 DATUM)

SITE BENCHMARK

SURVEY CONTROL POINT
MAG AND SHINER SET IN ASPHALT
ELEVATION = 221.99'
(NAVD 88 DATUM)

UTILITY NOTE

ALL UNDERGROUND PIPE TYPES, SIZES AND LOCATION SHOWN ON THIS SURVEY ARE BASED ON VISUAL OBSERVATION. ANY USE OF THIS INFORMATION SHOULD BE VERIFIED, BEFORE ITS USE, WITH THE CONTROLLING MUNICIPALITY OR UTILITY PROVIDER. THIS SURVEY MAKES NO GUARANTEE OF THE INSTALLED ACTUAL LOCATION, DEPTHS OR SIZE.

FEMA FLOOD NOTE

PROPERTY COMPLETELY OUT OF SPECIAL FLOOD HAZARD AREA (SFHA)

FLOOD INSURANCE RATE MAP No.: 06081C0282E
EFFECTIVE DATE: OCTOBER 16, 2012

LICENSED LAND SURVEYOR
GREGORY F. BRAZE
No. 7623
STATE OF CALIFORNIA

LEA & BRAZE ENGINEERING, INC.
CIVIL ENGINEERS | LAND SURVEYORS
MAIN OFFICE:
2495 INDUSTRIAL PKWY WEST
HAYWARD, CALIFORNIA 94545
(510) 887-4086
REGIONAL OFFICES:
ROSEVILLE
PLEASANTON
SAN JOSE
SAN LUIS OBISPO
WWW.LEABRAZE.COM

962 HILLCREST DRIVE
REDWOOD CITY
CALIFORNIA

SAN MATEO COUNTY

APN: 058-263-040

TOPOGRAPHIC SURVEY

REVISIONS	BY
–	–
–	–
–	–
–	–

JOB NO:	2241923
DATE:	11-4-24
SCALE:	1"=8'
BNDY BY:	KR
FIELD BY:	JC
DRAWN BY:	JP
SHEET NO:	SU1

1 OF 1 SHEETS

CONLEY RESIDENCE
962 HILLCREST DRIVE
REDWOOD CITY, CA

LEGEND

EXISTING	PROPOSED	DESCRIPTION
		BOUNDARY
		PROPERTY LINE
		RETAINING WALL
		LANDSCAPE RETAINING WALL
RW RW	RW RW	RAINWATER TIGHTLINE
SUB	SUB	SUBDRAIN LINE
TL	TL	TIGHTLINE
SD	SD	STORM DRAIN LINE
SS	SS	SANITARY SEWER LINE
W	W	WATER LINE
G	G	GAS LINE
P	SDP	STORM DRAIN PRESSURE LINE
P	SSP	SANITARY SEWER PRESSURE LINE
JT	JT	JOINT TRENCH
		SET BACK LINE
		CONCRETE VALLEY GUTTER
		EARTHEN SWALE
CB	CB	CATCH BASIN
JB	JB	JUNCTION BOX
AD	AD	AREA DRAIN
		CURB INLET
SDMH	SDMH	STORM DRAIN MANHOLE
		FIRE HYDRANT
SSMH	SSMH	SANITARY SEWER MANHOLE
222.57 INV	222.57 INV	STREET SIGN
		SPOT ELEVATION
		FLOW DIRECTION
	D	DEMOLISH/REMOVE
		BENCHMARK
200	200	CONTOURS
	XX" TREE	TREE TO BE REMOVED
	TP	TREE PROTECTION FENCING

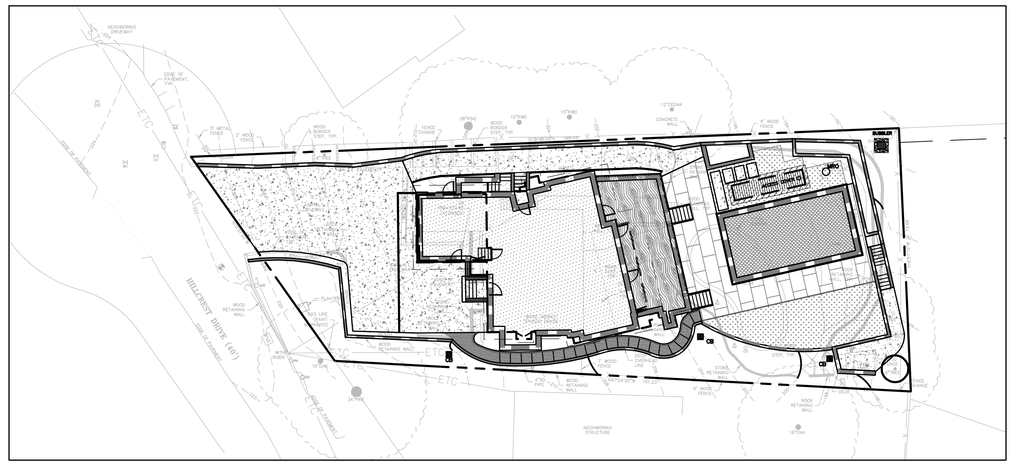

KEY MAP
1" = 20'

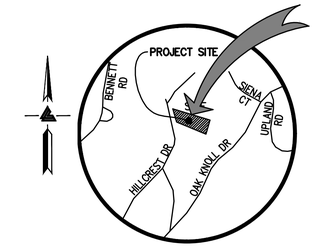

VICINITY MAP
NTS

OWNER'S INFORMATION

OWNER:
EMILY & ERIN CONLEY
962 HILLCREST DRIVE
REDWOOD CITY, CA

APN: 058-263-040

REFERENCES

THIS GRADING AND DRAINAGE PLAN IS SUPPLEMENTAL TO:

1. TOPOGRAPHIC SURVEY BY LEA AND BRAZE ENGINEERING, INC., ENTITLED;
   "TOPOGRAPHIC SURVEY"
   962 HILLCREST DRIVE
   REDWOOD CITY, CA
   DATED: 11-04-2024
   JOB# 2241923
2. SITE PLAN BY YOUNG & BORLIK ARCHITECTS ENTITLED:
   "ERIN AND EMILY CONLEY"
   962 HILLCREST DRIVE
   REDWOOD CITY, CA
3. SOILS REPORT BY ROMIG ENGINEERS ENTITLED:
   "GEOTECHNICAL INVESTIGATION CONLEY RESIDENCE"
   962 HILLCREST DRIVE
   REDWOOD CITY, CA

THE CONTRACTOR SHALL REFER TO THE ABOVE NOTED SURVEY AND PLAN, AND SHALL VERIFY BOTH EXISTING AND PROPOSED ITEMS ACCORDING TO THEM.

ABBREVIATIONS

AB	AGGREGATE BASE	LF	LINEAR FEET
AC	ASPHALT CONCRETE	MAX	MAXIMUM
ACC	ACCESSIBLE	MH	MANHOLE
AD	AREA DRAIN	MIN	MINIMUM
BC	BEGINNING OF CURVE	MON.	MONUMENT
B & D	BEARING & DISTANCE	MRO	METERED RELEASE OUTLET
BM	BENCHMARK	(N)	NEW
BUB	BUBBLER BOX	NO.	NUMBER
BW/FG	BOTTOM OF WALL/FINISH GRADE	NTS	NOT TO SCALE
		O.C.	ON CENTER
CB	CATCH BASIN	O/	OVER
C & G	CURB AND GUTTER	(PA)	PLANTING AREA
℄	CENTER LINE	PED	PEDESTRIAN
CPP	CORRUGATED PLASTIC PIPE (SMOOTH INTERIOR)	PIV	POST INDICATOR VALVE
		PSS	PUBLIC SERVICES EASEMENT
CO	CLEANOUT	⅊	PROPERTY LINE
COTG	CLEANOUT TO GRADE	PP	POWER POLE
CONC	CONCRETE	PUE	PUBLIC UTILITY EASEMENT
CONST	CONSTRUCT or -TION	PVC	POLYVINYL CHLORIDE
CONC COR	CONCRETE CORNER	R	RADIUS
CY	CUBIC YARD	RCP	REINFORCED CONCRETE PIPE
D	DIAMETER	RIM	RIM ELEVATION
DI	DROP INLET	RW	RAINWATER
DIP	DUCTILE IRON PIPE	R/W	RIGHT OF WAY
EA	EACH	S	SLOPE
EC	END OF CURVE	S.A.D.	SEE ARCHITECTURAL DRAWINGS
EG	EXISTING GRADE	SAN	SANITARY
EL	ELEVATIONS	SD	STORM DRAIN
EP	EDGE OF PAVEMENT	SDMH	STORM DRAIN MANHOLE
EQ	EQUIPMENT	SHT	SHEET
EW	EACH WAY	S.L.D.	SEE LANDSCAPE DRAWINGS
(E)	EXISTING	SPEC	SPECIFICATION
FC	FACE OF CURB	SS	SANITARY SEWER
FF	FINISHED FLOOR	SSCO	SANITARY SEWER CLEANOUT
FG	FINISHED GRADE	SSMH	SANITARY SEWER MANHOLE
FH	FIRE HYDRANT	ST.	STREET
FL	FLOW LINE	STA	STATION
FS	FINISHED SURFACE	STD	STANDARD
G	GAS	STRUCT	STRUCTURAL
GA	GAGE OR GAUGE	T	TELEPHONE
GB	GRADE BREAK	TC	TOP OF CURB
HDPE	HIGH DENSITY CORRUGATED POLYETHYLENE PIPE	TOW	TOP OF WALL
		TEMP	TEMPORARY
HORIZ	HORIZONTAL	TP	TOP OF PAVEMENT
HI PT	HIGH POINT	TW/FG	TOP OF WALL/FINISH GRADE
H&T	HUB & TACK	TYP	TYPICAL
ID	INSIDE DIAMETER	VC	VERTICAL CURVE
INV	INVERT ELEVATION	VCP	VITRIFIED CLAY PIPE
JB	JUNCTION BOX	VERT	VERTICAL
JT	JOINT TRENCH	W/	WITH
JP	JOINT UTILITY POLE	W, WL	WATER LINE
L	LENGTH	WM	WATER METER
LNDG	LANDING	WWF	WELDED WIRE FABRIC

RETAINING WALL NOTES

1. TW/FG REPRESENTS FINISHED EARTHEN GRADE OR PAVEMENT ELEVATION AT TOP OF WALL, NOT ACTUAL TOP OF WALL MATERIAL. BW/FG REPRESENTS FINISH EARTHEN GRADE OR PAVEMENT ELEVATION AT BOTTOM OF WALL NOT INCLUDING FILL FOUNDATION. GRADES INDICATED ON THESE PLANS REFER TO THE FINISHED GRADES ADJACENT TO THE RETAINING WALL, NOT INCLUDING FOOTING, FREEBOARD, ETC.
2. DIMENSIONS SHOWN IN BRACKETS SHOWN AS [X.X'] DENOTE THE EFFECTIVE WALL HEIGHT ONLY. THE ACTUAL WALL HEIGHT AND DEPTH MAY DIFFER DUE TO CONSTRUCTION REQUIREMENTS.
3. REFER TO SPECIFIC WALL CONSTRUCTION DETAIL FOR STRUCTURAL ELEMENTS, FREEBOARD, AND EMBEDMENT.
4. REFER TO ARCHITECTURAL, LANDSCAPE ARCHITECTURE, AND/OR STRUCTURAL PLANS FOR DETAILS, WALL ELEVATIONS, SUBDRAINAGE, WATERPROOFING, FINISHES, COLORS, STEEL REINFORCING, MATERIALS, ETC. PROVIDE CLIPS OR OTHER MEANS OF SECURING FINISH MATERIALS AS NECESSARY (WET SET INTO THE WALL).
5. ALL RETAINING WALLS SHOULD HAVE A BACK-OF-WALL SUB-SURFACE DRAINAGE SYSTEM INCLUDING WEEPHOLES TO PREVENT HYDROSTATIC PRESSURE.
6. SEE DETAIL SHEET FOR SPECIFIC INFORMATION.
7. PROVIDE GUARDRAIL (WHERE APPLICABLE AND DESIGNED BY OTHERS) AS REQUIRED FOR GRADE SEPARATION OF 30 INCHES OR MORE MEASURED 5' HORIZONTALLY FROM FACE OF WALL, PER CBC.

ESTIMATED EARTHWORK QUANTITIES

CUBIC YARDS	WITHIN BUILDING FOOTPRINT	OUTSIDE BUILDING FOOTPRINT	TOTAL CUBIC YARDS
CUT	300	185	485
FILL	0	60	60
EXPORT			425

NOTE:
GRADING QUANTITIES REPRESENT BANK YARDAGE. IT DOES NOT INCLUDE ANY SWELLING OR SHRINKAGE FACTORS AND IS INTENDED TO REPRESENT IN-SITU CONDITIONS. QUANTITIES DO NOT INCLUDE OVER-EXCAVATION, TRENCHING, STRUCTURAL FOUNDATIONS OR PIERS, OR POOL EXCAVATION (IF ANY). NOTE ADDITIONAL EARTHWORKS, SUCH AS KEYWAYS OR BENCHING MAY BE REQUIRED BY THE GEOTECHNICAL ENGINEER IN THE FIELD AT TIME OF CONSTRUCTION. CONTRACTOR TO VERIFY QUANTITIES.

UTILITY NOTE

ALL UNDERGROUND PIPE TYPES, SIZES AND LOCATION SHOWN ON THIS SURVEY ARE BASED ON VISUAL OBSERVATION. ANY USE OF THIS INFORMATION SHOULD BE VERIFIED, BEFORE ITS USE, WITH THE CONTROLLING MUNICIPALITY OR UTILITY PROVIDER. THIS SURVEY MAKES NO GUARANTEE OF THE INSTALLED ACTUAL LOCATION, DEPTHS OR SIZE.

EASEMENT NOTE

EASEMENTS ARE SHOWN PER PRELIMINARY TITLE REPORT ISSUED BY LAWYERS TITLE INSURANCE CORPORATION
TITLE NO. FLNP-006150983-MA
DATED SEPTEMBER 3, 2015.

TREE NOTE

TREE SIZE, TYPE AND DRIPLINES ARE BASED ON A VISUAL OBSERVATION. FINAL DETERMINATION SHOULD BE MADE BY THE PROJECT ARBORIST.

NOTES

ALL DISTANCES AND DIMENSIONS ARE IN FEET AND DECIMALS.

BUILDING FOOTPRINTS ARE SHOWN TO FINISHED MATERIAL (STUCCO/SIDING) AT GROUND LEVEL.

FINISH FLOOR ELEVATIONS ARE TAKEN AT DOOR THRESHOLD (EXTERIOR).

THE AREA OF THE SURVEYED LOT IS 11,717± SQUARE FEET / 0.27± ACRES

FEMA FLOOD NOTE

PROPERTY COMPLETELY OUT OF SPECIAL FLOOD HAZARD AREA (SFHA)

FLOOD INSURANCE RATE MAP No.: 06081C0282E
EFFECTIVE DATE: OCTOBER 16, 2012

BENCHMARK

REDWOOD CITY BENCHMARK BM70
WHIPPLE AVE AT UPLAND RD - SET BRASS DISC STAMPED "CITY OF REDWOOD CITY BENCHMARK"ON CURB, AT INTERSECTION, SOUTH CURB RETURN, MID-POC.
ELEVATION = 117.10'
(NAVD 88 DATUM)

SITE BENCHMARK

SURVEY CONTROL POINT
MAG AND SHINER SET IN ASPHALT
ELEVATION = 221.99'
(NAVD 88 DATUM)

* BUILDING PAD NOTE:
ADJUST PAD LEVEL AS REQUIRED. REFER TO STRUCTURAL PLANS FOR SLAB SECTION OR CRAWL SPACE DEPTH TO ESTABLISH PAD LEVEL.

CALL 1-800-642-2444 BEFORE YOU DIG
811
UNDERGROUND SERVICE ALERT

NOTE:
FOR CONSTRUCTION STAKING SCHEDULING OR QUOTATIONS PLEASE CONTACT ALEX ABAYA AT LEA & BRAZE ENGINEERING
(510)887-4086 EXT 116.
aabaya@leabraze.com

SHEET INDEX

C-1.0	TITLE SHEET
C-1.1	OVERALL SITE PLAN
C-2.0	GRADING & DRAINAGE PLAN
C-3.0	UTILITY PLAN
C-4.0	DETAILS
C-4.1	DETIALS
C-4.2	DETAILS
C-5.0	GRADING SPECIFICATIONS
ER-1	EROSION CONTROL PLAN
ER-2	EROSION CONTROL DETAILS
BMP	BEST MANAGEMENT PRACTICES

REGISTERED PROFESSIONAL ENGINEER
JAMES TOBY
No. 63127
CIVIL
STATE OF CALIFORNIA
ORIGINAL SIGNATURES IN BLUE INK

LEA & BRAZE ENGINEERING, INC.
CIVIL ENGINEERS | LAND SURVEYORS
MAIN OFFICE:
2495 INDUSTRIAL PKWY WEST
HAYWARD, CALIFORNIA 94545
(510) 887-4086
REGIONAL OFFICES:
ROSEVILLE
DUBLIN
SAN JOSE
WWW.LEABRAZE.COM

CONLEY RESIDENCE
962 HILLCREST DRIVE
REDWOOD CITY, CALIFORNIA
UNINCORPORATED SAN MATEO COUNTY
APN: 058-263-040

TITLE SHEET

REVISIONS	BY
-	-
-	-
-	-
-	-
-	-

JOB NO:	2250691
DATE:	10-09-25
SCALE:	AS NOTED
DESIGN BY:	JPMR
CHECKED BY:	CP
SHEET NO:	C-1.0

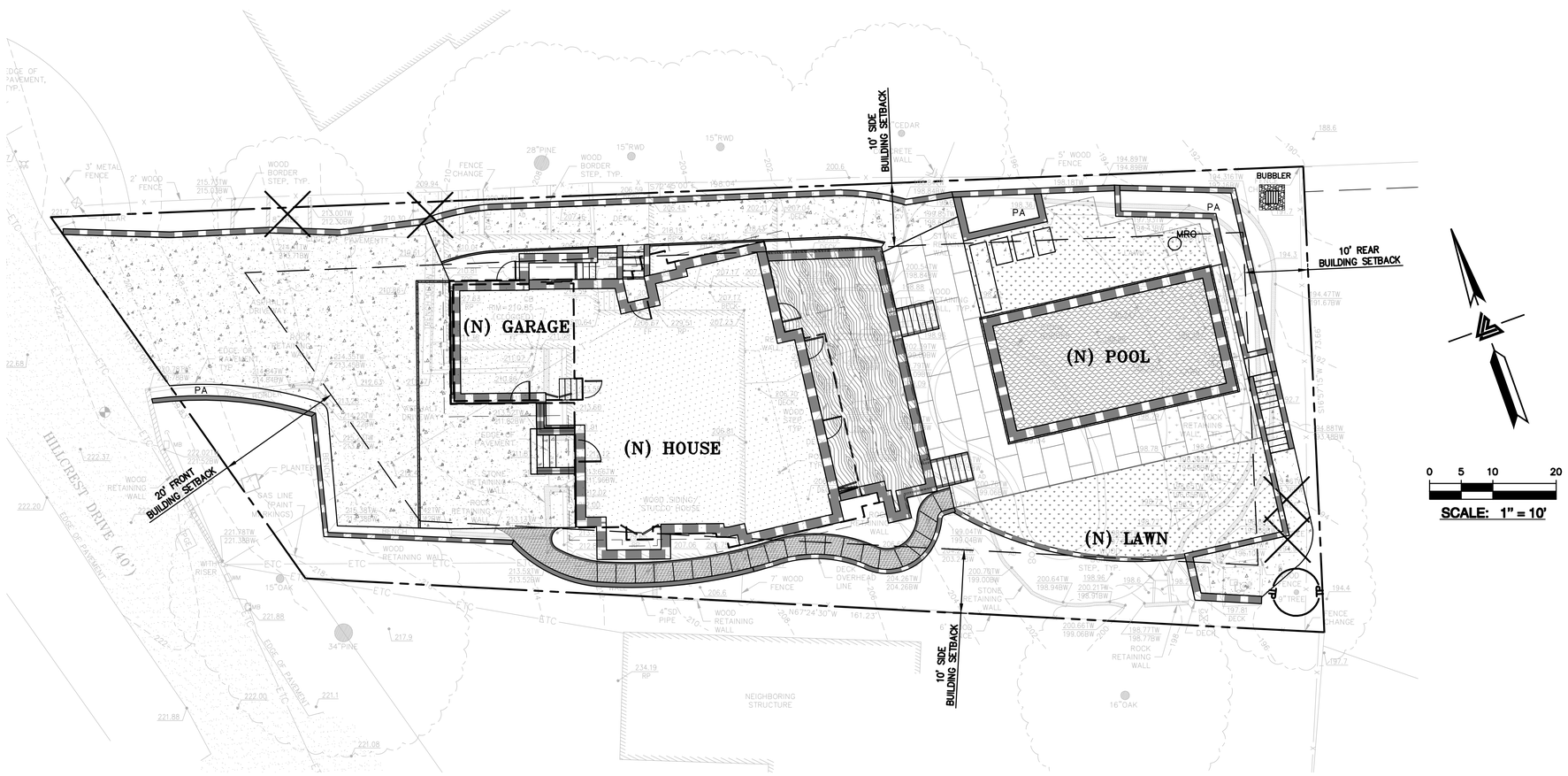

NOTE:
FOR CONSTRUCTION STAKING SCHEDULING OR QUOTATIONS PLEASE CONTACT ALEX ABAYA AT LEA & BRAZE ENGINEERING (510)887-4086 EXT 116.
aabaya@leabraze.com

*** BUILDING PAD NOTE:**
ADJUST PAD LEVEL AS REQUIRED. REFER TO STRUCTURAL PLANS FOR SLAB SECTION OR CRAWL SPACE DEPTH TO ESTABLISH PAD LEVEL.

REGISTERED PROFESSIONAL ENGINEER
JAMES TOBY
No. 63127
CIVIL
STATE OF CALIFORNIA
ORIGINAL SIGNATURES IN BLUE INK

LEA & BRAZE ENGINEERING, INC.
CIVIL ENGINEERS | LAND SURVEYORS
MAIN OFFICE:
2495 INDUSTRIAL PKWY WEST
HAYWARD, CALIFORNIA 94545
(510) 887-4086
REGIONAL OFFICES:
ROSEVILLE
DUBLIN
SAN JOSE
WWW.LEABRAZE.COM

CONLEY RESIDENCE
962 HILLCREST DRIVE
REDWOOD CITY, CALIFORNIA

UNINCORPORATED SAN MATEO COUNTY

APN: 058-263-040

OVERALL SITE PLAN

REVISIONS	BY
–	–
–	–
–	–
–	–
–	–

JOB NO:	2250691
DATE:	10-09-25
SCALE:	AS NOTED
DESIGN BY:	JPMR
CHECKED BY:	CP
SHEET NO:	C-1.1

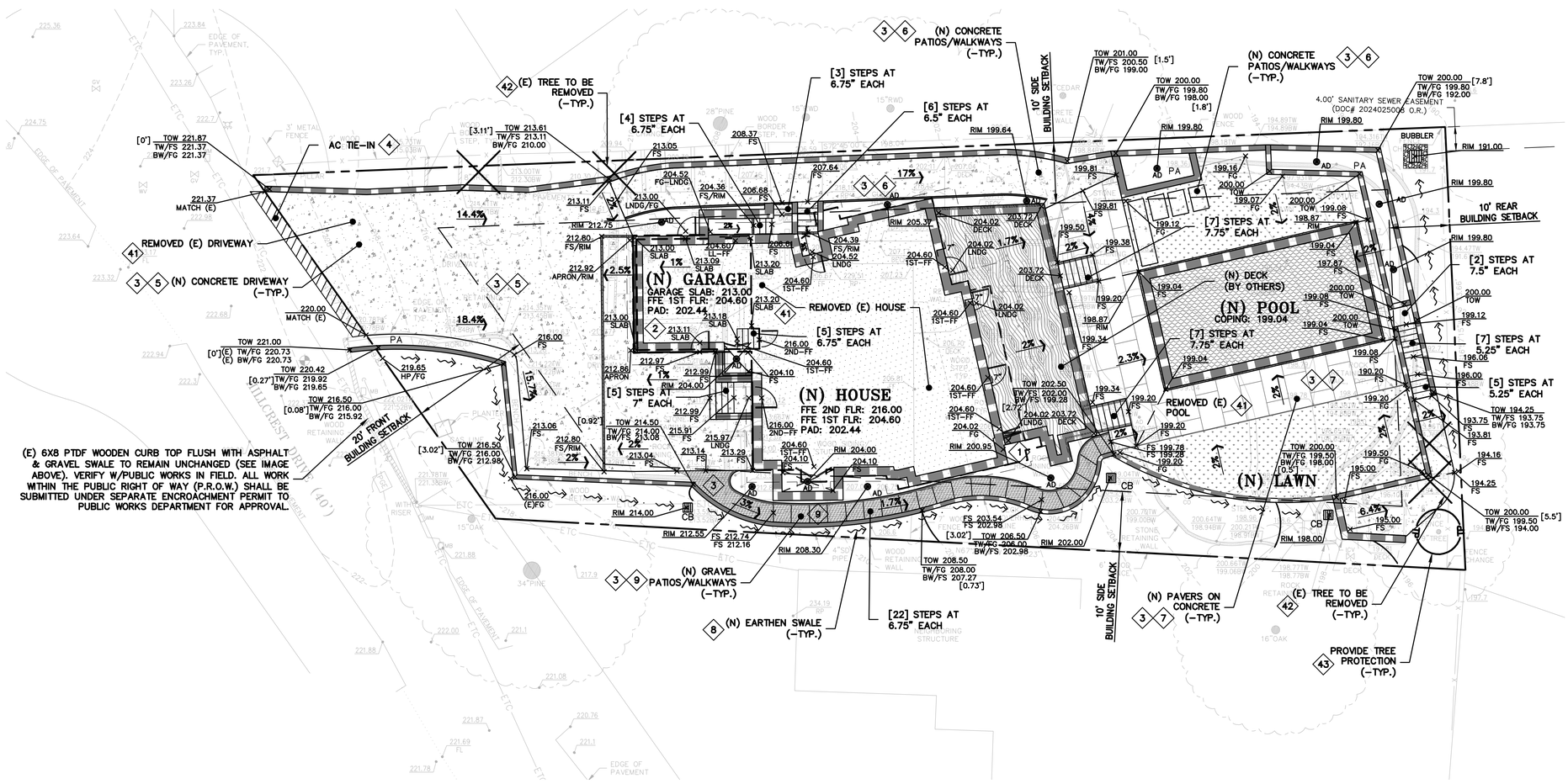

(E) 6X8 PTDF WOODEN CURB TOP FLUSH WITH ASPHALT & GRAVEL SWALE TO REMAIN UNCHANGED (SEE IMAGE ABOVE). VERIFY W/PUBLIC WORKS IN FIELD. ALL WORK WITHIN THE PUBLIC RIGHT OF WAY (P.R.O.W.) SHALL BE SUBMITTED UNDER SEPARATE ENCROACHMENT PERMIT TO PUBLIC WORKS DEPARTMENT FOR APPROVAL.

*** BUILDING PAD NOTE:** ADJUST PAD LEVEL AS REQUIRED. REFER TO STRUCTURAL PLANS FOR SLAB SECTION OR CRAWL SPACE DEPTH TO ESTABLISH PAD LEVEL.

NOTE:
FOR CONSTRUCTION STAKING SCHEDULING OR QUOTATIONS PLEASE CONTACT ALEX ABAYA AT LEA & BRAZE ENGINEERING (510)887-4086 EXT 116.
aabaya@leabraze.com

FLATWORK KEYNOTES 1 TO 9

1. FINISHED GRADES AT BUILDING PERIMETER SHALL BE SLOPED AT A MINIMUM OF 5% FOR THE FIRST 10' AWAY FROM THE BUILDING PER CBC 1804.4 OR TO AN APPROVED DRAINAGE SWALE OR STRUCTURE. GRADES SHALL CONTINUE TO SLOPE TOWARDS POSITIVE DRAINAGE AND A POSITIVE OUTFALL. MAINTAIN 8" CLEARANCE BETWEEN FINISH EARTHEN GRADE AND BOTTOM OF MUD SILL AT ALL TIMES PER CBC 2304.12.1.2 UNLESS STRUCTURAL DETAILING ALLOWS LESS. REFER TO STRUCTURAL PLANS FOR FOUNDATION DESIGN AND DETAILS.
2. SLOPE GARAGE SLAB 1% MINIMUM (1/8" PER FOOT) FROM BACK TO FRONT TO ALLOW FOR ADEQUATE DRAINAGE. MAINTAIN 1/2" TO 1" LIP BETWEEN GARAGE SLAB AND DRIVEWAY. SEE PLANS FOR SPECIFIC DROP
3. PROVIDE 2% SLOPE ACROSS FLAT WORK AND/OR PAVING PER CBC 1804.4. SLOPE TOWARDS POSITIVE DRAINAGE AS SHOWN ON PLAN.
4. GRIND AC TO TIE (N) AC INTO (E) AC PAVING. SEE DETAIL 1 ON SHEET C-4.0.
5. (N) CONCRETE DRIVEWAY. SEE DETAIL 2 ON SHEET C-4.0.
6. (N) CONCRETE PATIOS/WALKWAYS. SEE DETAIL 2 ON SHEET C-4.0.
7. (N) PAVERS ON CONCRETE/POOL PATIO PAVING. SEE DETAIL 4 ON SHEET C-4.0.
8. CONSTRUCT (N) EARTHEN SWALE SLOPED AT 1% MINIMUM TOWARDS POSITIVE OUTFALL. SEE DETAIL 5 ON SHEET C-4.0.
9. (N) GRAVEL PATIOS/WALKWAYS. SEE DETAIL 6 ON SHEET C-4.0.

DEMOLITION KEYNOTES 41 TO 43

41. DEMOLISH (E) IMPROVEMENTS AS NECESSARY TO ACCOMMODATE (N) CONSTRUCTION. NO DEMOLITION SHALL COMMENCE WITHOUT REQUIRED DEMOLITION PERMITS.
42. REMOVE (E) TREE. CONTRACTOR SHALL OBTAIN THE PROPER TREE REMOVAL PERMITS AS REQUIRED.
43. PROVIDE TREE PROTECTION AROUND TREES TO REMAIN. SEE DETAIL 6 ON SHEET ER-2.

NOTE:
FOR CONSTRUCTION STAKING SCHEDULING OR QUOTATIONS PLEASE CONTACT ALEX ABAYA AT LEA & BRAZE ENGINEERING (510)887-4086 EXT 116.
aabaya@leabraze.com

*** BUILDING PAD NOTE:** ADJUST PAD LEVEL AS REQUIRED. REFER TO STRUCTURAL PLANS FOR SLAB SECTION OR CRAWL SPACE DEPTH TO ESTABLISH PAD LEVEL.

CALL 1-800-642-2444 BEFORE YOU DIG — 811 — UNDERGROUND SERVICE ALERT

REGISTERED PROFESSIONAL ENGINEER — JAMES TOBY — No. 63127 — CIVIL — STATE OF CALIFORNIA — ORIGINAL SIGNATURES IN BLUE INK

LEA & BRAZE ENGINEERING, INC.
CIVIL ENGINEERS | LAND SURVEYORS
MAIN OFFICE: 2495 INDUSTRIAL PKWY WEST, HAYWARD, CALIFORNIA 94545, (510) 887-4086
REGIONAL OFFICES: ROSEVILLE, DUBLIN, SAN JOSE
WWW.LEABRAZE.COM

CONLEY RESIDENCE
962 HILLCREST DRIVE
REDWOOD CITY, CALIFORNIA

UNINCORPORATED SAN MATEO COUNTY — APN: 058-263-040

GRADING & DRAINAGE PLAN

REVISIONS	BY
–	–
–	–
–	–
–	–
–	–

JOB NO:	2250691
DATE:	10-09-25
SCALE:	AS NOTED
DESIGN BY:	JPMR
CHECKED BY:	CP
SHEET NO:	C-2.0

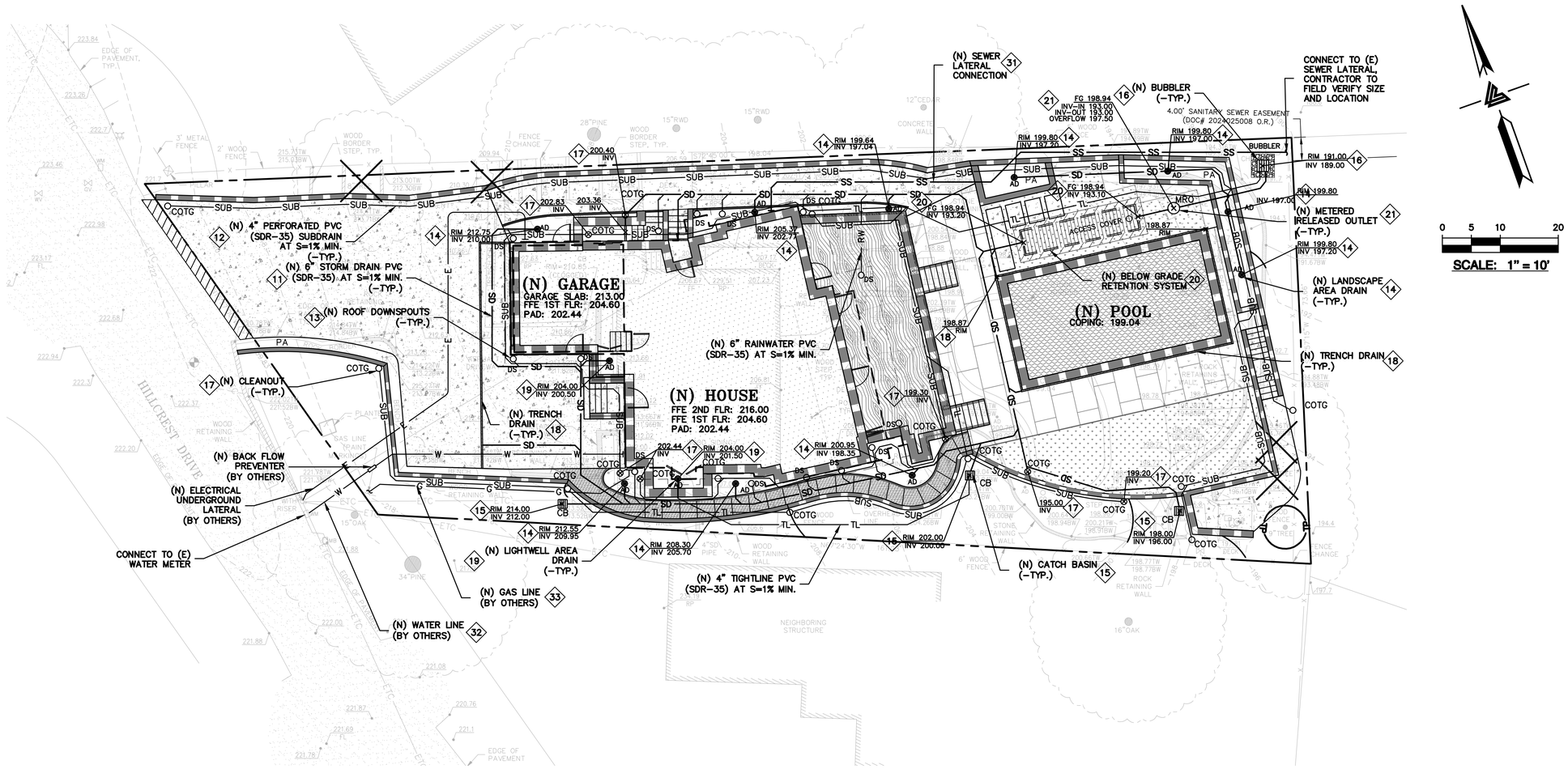

STORM DRAIN KEYNOTES 11 TO 21

11 INSTALL (N) ON-SITE STORM DRAIN SYSTEM. USE MINIMUM 6" PVC (SDR 35) OR HDPE (ADS N-12 W/ SMOOTH INTERIOR WALLS). MAINTAIN 24" MINIMUM COVER AND SLOPED AT 1% MINIMUM AT ALL TIMES UNLESS OTHERWISE NOTED. PROVIDE CLEANOUT TO GRADE AT MAJOR CHANGES IN DIRECTION. AVOID USING 90° BENDS AND INSTEAD USE (2) 45° BENDS AND WYE CONNECTIONS.

12 INSTALL (N) SUBDRAIN. USE PERFORATED 4" PVC (SDR-35) WITH HOLES DOWN AND SLOPED AT 1% MINIMUM SURROUND WITH 3/4" DRAIN ROCK WRAPPED IN FILTER FABRIC (MIRAFI 140N). MIRADRAIN OR OTHER LEA & BRAZE PREAPPROVED DRAINAGE SYSTEM MAY ALSO BE USED. AVOID USING 90° BENDS AND INSTEAD USE (2) 45° BENDS AND WYE CONNECTIONS. PROVIDE CLEANOUT TO GRADE AT MAJOR CHANGES IN DIRECTION AND AT 100' MAXIMUM INTERVALS. SUBDRAIN SHALL REMAIN A DEDICATED SEPARATE SYSTEM UNTIL IT CONNECTS TO STORM DRAIN SYSTEM OR OUTFALL AS SHOWN. SEE DETAIL 3 ON SHEET C-4.0.

13 CONNECT RAIN WATER DOWNSPOUTS TO 4" PVC (SDR-35) TIGHTLINE, SLOPED AT 1% MINIMUM. DIRECT TO NEAREST STORM DRAIN LINE AS SHOWN ON PLANS. PROVIDE CLEANOUT TO GRADE AT MAJOR CHANGES IN DIRECTION. AVOID USING 90° BENDS AND INSTEAD USE (2) 45° BENDS. TIGHTLINE MAY BE PLACED IN COMMON TRENCH WITH SUBDRAIN LINES, HOWEVER, DO NOT CONNECT TO SUBDRAIN LINES. SEE DETAIL 1 ON SHEET C-4.1.

14 INSTALL (N) 4" DIAMETER HEAVY DUTY PLASTIC BLACK GRATE IN LANDSCAPE OR PLANTER AREAS (NDS PART 78 OR 90 FOR 6" DIAMETER HEAVY DUTY PLASTIC BLACK GRATE). SEE DETAIL 2 ON C-4.1.

15 INSTALL (N) "CHRISTY V-12" CATCH BASIN W/ CONCRETE BOTTOM FLUSH W/ LOWEST OUTGOING INVERT. PLACE BOX ON 6" CLASS 2 AGGREGATE BASE MATERIAL. SEE DETAIL 3 ON SHEET C-4.1.

16 INSTALL (N) "CHRISTY V-12" BUBBLER WITH GRAVEL BOTTOM. SEE DETAIL 4 ON SHEET C-4.1.

17 (N) CLEAN OUT TO GRADE. SEE DETAIL 5 ON SHEET C-4.1

18 TRENCH DRAINS SHALL BE 6" NDS "DURA-SLOPE" PRESLOPED TRENCH DRAINS W/ TRAFFIC RATED GRATE OR APPROVED EQUAL. CONNECT TO NEAREST STORM DRAIN LINE VIA 4" PVC TIGHTLINE.

19 INSTALL (N) LIGHTWELL DRAIN. SEE DETAIL 6 ON SHEET C-4.1.

20 INSTALL (N) RETENTION SYSTEM. SEE DETAIL 1 ON SHEET C-4.2.

21 INSTALL NEW METERED RELEASED OUTLET. SEE DETAIL 2 ON SHEET C-4.2.

UTILITIES KEYNOTES 31 TO 33

31 INSTALL (N) SANITARY SEWER LATERALS. USE 4" PVC (SDR-26) SLOPED AT 2% MINIMUM. CONNECT TO (E) SEWER MAIN AS SHOWN. PROVIDE CLEANOUT TO GRADE AT BUILDING AND BEHIND PROPERTY LINE AND AT MAJOR CHANGES IN DIRECTION AS SHOWN. REUSE (E) LATERAL IF POSSIBLE. CONNECT PER DISTRICT STANDARDS.

32 CONNECT (N) WATER SERVICE PER WATER DISTRICT STANDARDS. UPGRADE (E) WATER METER PER WATER DISTRICT STANDARDS AS APPLICABLE. INSTALL (N) 2" MINIMUM SERVICE LINE TO (N) RESIDENCE OR AS DIRECTED BY FIRE SPRINKLER DESIGNER.

33 INSTALL (N) JOINT TRENCH FOR SERVICES INCLUDING GAS, CATV & ELECTRIC FROM NEAREST POINT OF CONNECTION. DESIGN BY OTHERS.

NOTE:
FOR CONSTRUCTION STAKING SCHEDULING OR QUOTATIONS PLEASE CONTACT ALEX ABAYA AT LEA & BRAZE ENGINEERING (510)887-4086 EXT 116.
aabaya@leabraze.com

*** BUILDING PAD NOTE:**
ADJUST PAD LEVEL AS REQUIRED. REFER TO STRUCTURAL PLANS FOR SLAB SECTION OR CRAWL SPACE DEPTH TO ESTABLISH PAD LEVEL.

1-800-642-2444 CALL BEFORE YOU DIG 811 UNDERGROUND SERVICE ALERT

REGISTERED PROFESSIONAL ENGINEER JAMES TOBY No. 63127 CIVIL STATE OF CALIFORNIA ORIGINAL SIGNATURES IN BLUE INK

LEA & BRAZE ENGINEERING, INC.
CIVIL ENGINEERS | LAND SURVEYORS
MAIN OFFICE:
2495 INDUSTRIAL PKWY WEST
HAYWARD, CALIFORNIA 94545
(510) 887-4086
REGIONAL OFFICES:
ROSEVILLE
DUBLIN
SAN JOSE
WWW.LEABRAZE.COM

CONLEY RESIDENCE
962 HILLCREST DRIVE
REDWOOD CITY, CALIFORNIA

UNINCORPORATED SAN MATEO COUNTY

APN: 058-263-040

UTILITY PLAN

REVISIONS	BY
–	–
–	–
–	–
–	–
–	–

JOB NO:	2250691
DATE:	10-09-25
SCALE:	AS NOTED
DESIGN BY:	JPMR
CHECKED BY:	CP
SHEET NO:	C-3.0

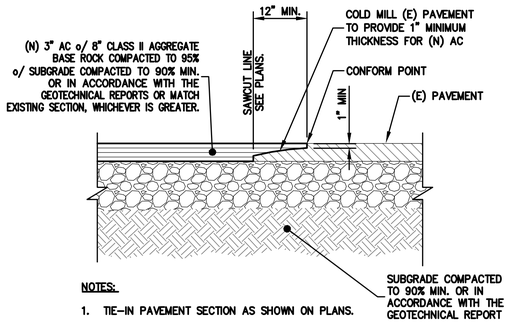

NOTES:

1. TIE-IN PAVEMENT SECTION AS SHOWN ON PLANS.
2. TIE-IN OF ASPHALT CONCRETE SHALL EXTEND TO AT LEAST THE BOTTOM OF EXISTING ASPHALT CONCRETE.

1 / C-4.0 PAVEMENT TIE-IN

NTS

NOTES:

1. SLOPE ALL CONCRETE TO DRAIN 1% MIN.
2. SEE LANDSCAPE OR ARCHITECTURAL PLANS FOR CONCRETE COLORS AND FINISHES.
3. EASE ALL EDGES R=1/2"
4. FELT SHALL BE NON-ASPHALTIC IMPREGNATED.

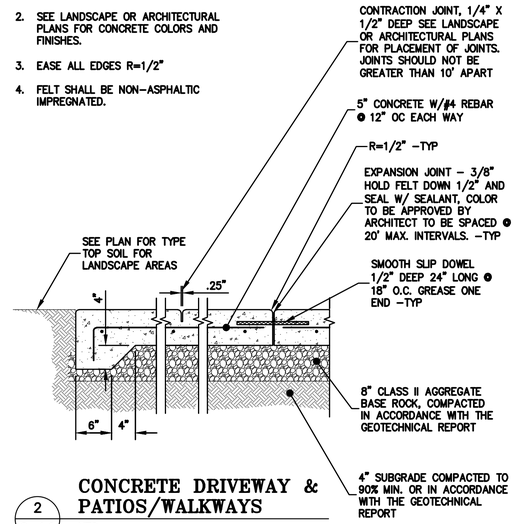

2 / C-4.0 CONCRETE DRIVEWAY & PATIOS/WALKWAYS

NTS

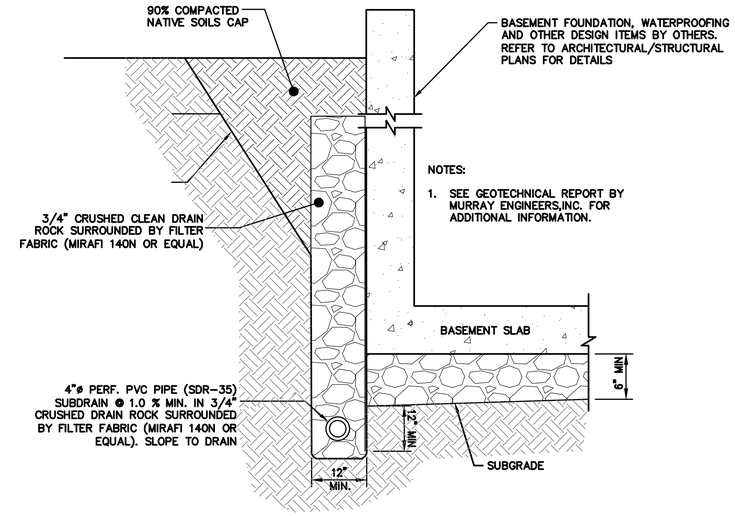

NOTES:

1. SEE GEOTECHNICAL REPORT BY MURRAY ENGINEERS,INC. FOR ADDITIONAL INFORMATION.

3 / C-4.0 BASEMENT SUBDRAIN

NTS

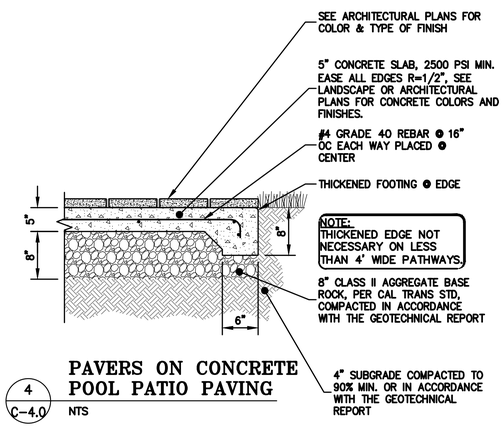

4 / C-4.0 PAVERS ON CONCRETE POOL PATIO PAVING

NTS

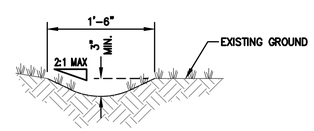

5 / C-4.0 EARTHEN SWALE DETAIL

NTS

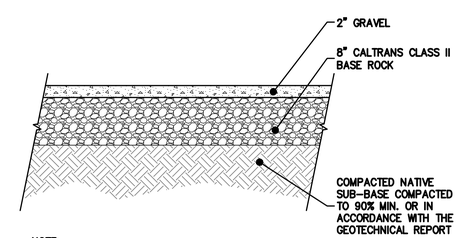

NOTE:
PAVEMENT SECTION PER GEOTECHNICAL REPORT.

6 / C-4.0 GRAVEL PATIOS/WALKWAYS

NTS

REGISTERED PROFESSIONAL ENGINEER JAMES TOBY No. 63127 CIVIL STATE OF CALIFORNIA ORIGINAL SIGNATURES IN BLUE INK

LEA & BRAZE ENGINEERING, INC.
CIVIL ENGINEERS | LAND SURVEYORS
MAIN OFFICE:
2495 INDUSTRIAL PKWY WEST
HAYWARD, CALIFORNIA 94545
(510) 887-4086
REGIONAL OFFICES:
ROSEVILLE
DUBLIN
SAN JOSE
WWW.LEABRAZE.COM

CONLEY RESIDENCE
962 HILLCREST DRIVE
REDWOOD CITY, CALIFORNIA
UNINCORPORATED SAN MATEO COUNTY

APN: 058-263-040

DETAILS

REVISIONS	BY
-	-
-	-
-	-
-	-
-	-

JOB NO:	2250691
DATE:	10-09-25
SCALE:	NTS
DESIGN BY:	JPMR
CHECKED BY:	CP
SHEET NO:	C-4.0

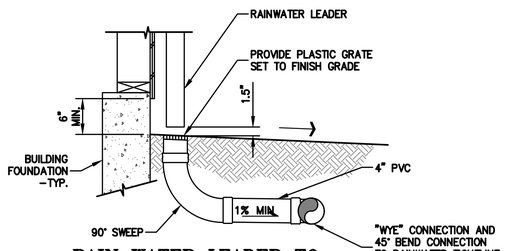

1 / C-4.1 RAIN WATER LEADER TO TIGHTLINE CONNECTION

NTS

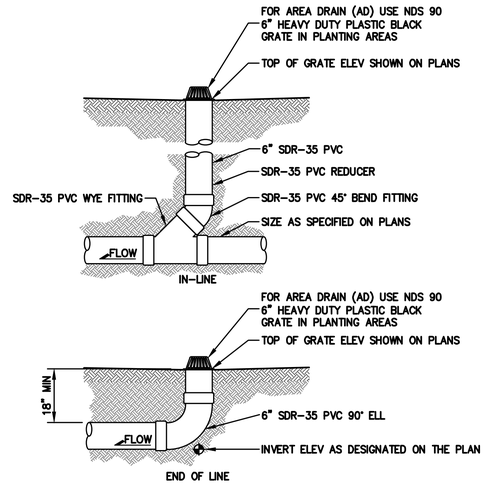

NOTE:
GLUED FITTINGS MAY BE SUBSTITUTED FOR GASKETED FITTINGS AT THE OPTION OF THE INSTALLATION CONTRACTOR.

2 / C-4.1 AREA DRAIN

NTS

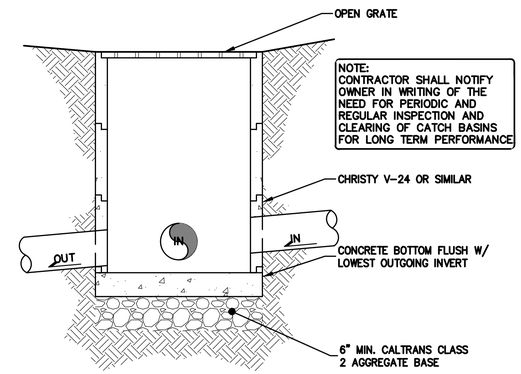

3 / C-4.1 CATCH BASIN

NTS

RIM NOTE:
RIM ELEVATION OF BASIN SHOULD BE AT LEAST 6" BELOW THE NEXT LOWEST SURFACE DRAIN ELEVATION WHERE POSSIBLE

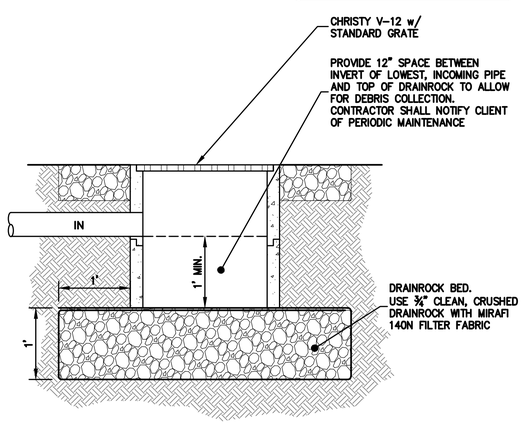

4 / C-4.1 BUBBLER BOX

NTS

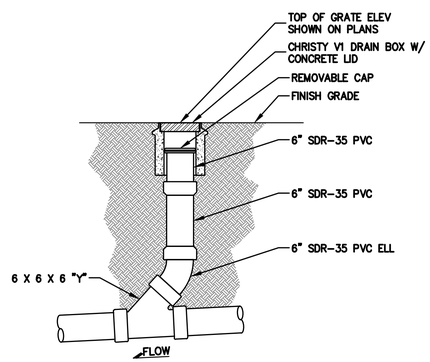

5 / C-4.1 ON-SITE CLEANOUT

NTS

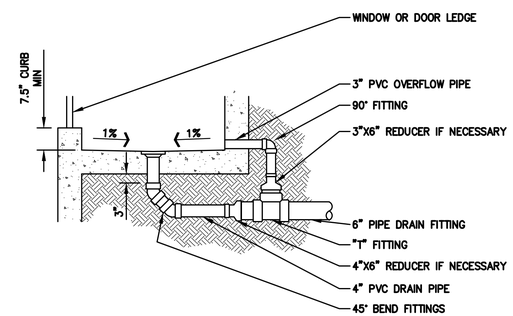

NOTES:
1. SLOPE INTERIOR SLAB OF LIGHTWELL @ 1% MIN IN ALL DIRECTIONS TO DIRECT FLOW TOWARDS INLET.
2. MAINTAIN 6" MIN FROM BOTTOM OF SILL/DOOR TO BOTTOM OF LIGHTWELL.
3. INSTALL "NEENAH R-4344" GRATE AND 3" PVC OUT GOING PIPE IN LIGHTWELLS NOT INTENDED TO HAVE FOOT TRAFFIC.
4. INSTALL 4" METAL GRATE AND 4" PVC OUTGOING PIPE IN AREAS INTENDED TO HAVE FOOT TRAFFIC.
5. INSTALL 3" PVC OVERFLOW PIPE AS SHOWN.
6. CONTRACTOR SHALL SUBMIT TO THE OWNER IN WRITING THE NEED FOR PERIODIC MAINTENANCE AND REMOVAL OF DEBRIS.
7. REFER TO STRUCTURAL PLAN FOR WALL CONSTRUCTION DETAIL.

6 / C-4.1 LIGHTWELL OVERFLOW DETAIL

NTS

REGISTERED PROFESSIONAL ENGINEER JAMES TOBY No. 63127 CIVIL STATE OF CALIFORNIA ORIGINAL SIGNATURES IN BLUE INK

LEA & BRAZE ENGINEERING, INC.
CIVIL ENGINEERS | LAND SURVEYORS
MAIN OFFICE:
2495 INDUSTRIAL PKWY WEST
HAYWARD, CALIFORNIA 94545
(510) 887-4086
REGIONAL OFFICES:
ROSEVILLE
DUBLIN
SAN JOSE
WWW.LEABRAZE.COM

CONLEY RESIDENCE
962 HILLCREST DRIVE
REDWOOD CITY, CALIFORNIA
UNINCORPORATED SAN MATEO COUNTY
APN: 058-263-040

DETAILS

REVISIONS	BY
–	–
–	–
–	–
–	–
–	–

JOB NO:	2250691
DATE:	10-09-25
SCALE:	NTS
DESIGN BY:	JPMR
CHECKED BY:	CP
SHEET NO:	C-4.1

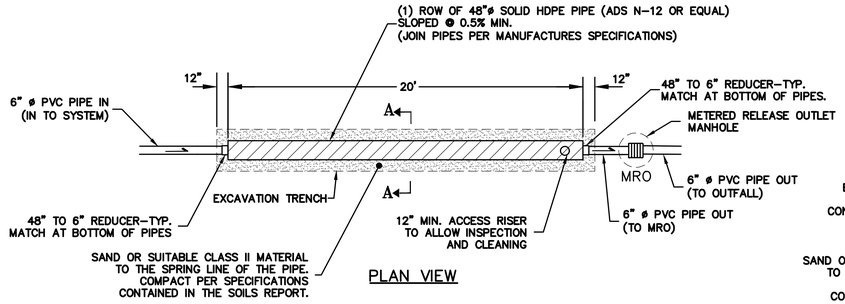

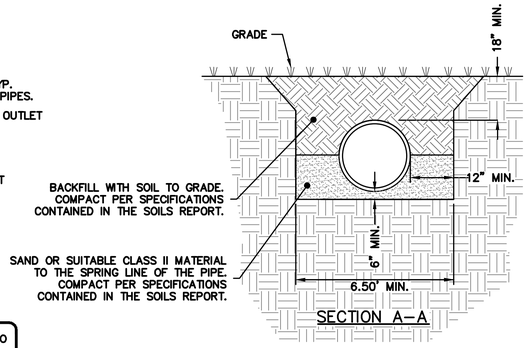

STORAGE PIPE NOMINAL I.D.	NOMINAL O.D.	MIN. SIDE COVER
48" (1,200 MM)	54" (1,372 MM)	12" (292 MM)

THIS IS A SCHEMATIC DETAIL. REFER TO PLAN FOR INLET LOCATIONS, INVERTS, ACCESS COVERS, ETC.

NOTES:

1. ALL REFERENCES TO CLASS I OR II MATERIAL ARE PER ASTM D2321 "STANDARD PRACTICE FOR UNDERGROUND INSTALLATION OF THERMOPLASTIC PIPE FOR SEWERS AND OTHER GRAVITY FLOW APPLICATIONS", LATEST EDITION.

2. ALL RETENTION AND DETENTION SYSTEMS SHALL BE INSTALLED IN ACCORDANCE WITH ASTM D2321, LATEST EDITION AND THE MANUFACTURER'S PUBLISHED INSTALLATION GUIDELINES.

3. MEASURES SHOULD BE TAKEN TO PREVENT THE MIGRATION OF NATIVE FINES INTO THE BACKFILL MATERIAL, WHEN REQUIRED. SEE ASTM D2321.

4. FILTER FABRIC: A GEOTEXTILE FABRIC MAY BE USED AS SPECIFIED BY THE ENGINEER TO PREVENT THE MIGRATION OF FINES FROM THE NATIVE SOIL INTO THE SELECT BACKFILL MATERIAL.

5. FOUNDATION: WHERE THE TRENCH BOTTOM IS UNSTABLE, THE CONTRACTOR SHALL EXCAVATE TO A DEPTH REQUIRED BY THE ENGINEER AND REPLACE WITH SUITABLE MATERIAL AS SPECIFIED BY THE ENGINEER. AS AN ALTERNATIVE AND AT THE DISCRETION OF THE DESIGN ENGINEER, THE TRENCH BOTTOM MAY BE STABILIZED USING A GEOTEXTILE MATERIAL.

6. BEDDING: SUITABLE MATERIAL SHALL BE CLASS II*. THE CONTRACTOR SHALL PROVIDE DOCUMENTATION FOR MATERIAL SPECIFICATION TO ENGINEER. UNLESS OTHERWISE NOTED BY THE ENGINEER, MINIMUM BEDDING THICKNESS SHALL BE 4" (100mm) FOR 4"-24" (100mm-600mm); 6" (150mm) FOR 30"-60" (750mm-900mm).

7. INITIAL BACKFILL: SUITABLE MATERIAL SHALL BE CLASS II* IN THE PIPE ZONE EXTENDING NOT LESS THAN 6" ABOVE CROWN OF PIPE. THE CONTRACTOR SHALL PROVIDE DOCUMENTATION FOR MATERIAL SPECIFICATION TO ENGINEER. MATERIAL SHALL BE INSTALLED AS REQUIRED IN ASTM D2321, LATEST EDITION.

8. MINIMUM COVER: MINIMUM COVER OVER ALL RETNETION/DETENTION SYSTEMS IN NON-TRAFFIC APPLICATIONS (GRASS OR LANDSCAPE AREAS) IS 18" FROM TOP OF PIPE TO GROUND SURFACE. ADDITIONAL COVER MAY BE REQUIRED TO PREVENT FLOATATION. FOR TRAFFIC APPLICATIONS, MINIMUM COVER IS 18" UP TO 36" DIAMETER PIPE AND 24" OF COVER FOR 42" - 60" DIAMETER PIPE, MEASURED FROM TOP OF PIPE TO BOTTOM OF FLEXIBLE PAVEMENT OR TO TOP OF RIGID PAVEMENT.

* CLASS I BACKFILL REQUIRED AROUND 60" DIAMETER FITTINGS.

1 / C-4.2 **TYPICAL RETENTION SYSTEM DETAILS**

NTS

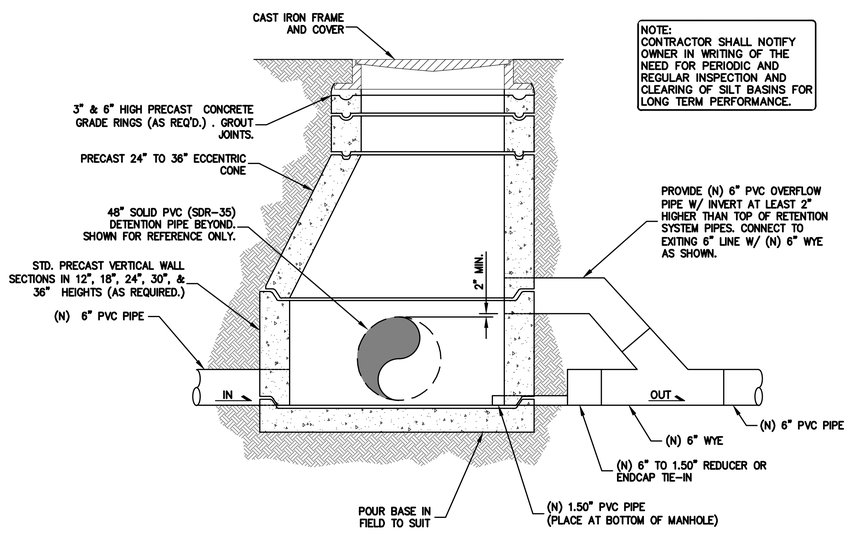

NOTE:
CONTRACTOR SHALL NOTIFY OWNER IN WRITING OF THE NEED FOR PERIODIC AND REGULAR INSPECTION AND CLEARING OF SILT BASINS FOR LONG TERM PERFORMANCE.

2 / C-4.0 **METERED RELEASED OUTLET**

NTS

REGISTERED PROFESSIONAL ENGINEER
JAMES TOBY
No. 63127
CIVIL
STATE OF CALIFORNIA
ORIGINAL SIGNATURES IN BLUE INK

LEA & BRAZE ENGINEERING, INC.
CIVIL ENGINEERS I LAND SURVEYORS
MAIN OFFICE:
2495 INDUSTRIAL PKWY WEST
HAYWARD, CALIFORNIA 94545
(510) 887-4086
REGIONAL OFFICES:
ROSEVILLE
DUBLIN
SAN JOSE
WWW.LEABRAZE.COM

CONLEY RESIDENCE
962 HILLCREST DRIVE
REDWOOD CITY, CALIFORNIA
UNINCORPORATED SAN MATEO COUNTY
APN: 058-263-040

DETAILS

REVISIONS	BY
-	-
-	-
-	-
-	-
-	-

JOB NO:	2250691
DATE:	10-09-25
SCALE:	NTS
DESIGN BY:	JPMR
CHECKED BY:	CP
SHEET NO:	C-4.2

GENERAL NOTES

ALL GENERAL NOTES, SHEET NOTES, AND LEGEND NOTES FOUND IN THESE DOCUMENTS SHALL APPLY TYPICALLY THROUGHOUT. IF INCONSISTENCIES ARE FOUND IN THE VARIOUS NOTATIONS, NOTIFY THE ENGINEER IMMEDIATELY IN WRITING REQUESTING CLARIFICATION.

THESE DRAWINGS AND THEIR CONTENT ARE AND SHALL REMAIN THE PROPERTY OF LEA AND BRAZE ENGINEERING, INC. WHETHER THE PROJECT FOR WHICH THEY ARE PREPARED IS EXECUTED OR NOT. THEY ARE NOT TO BE USED BY ANY PERSONS ON OTHER PROJECTS OR EXTENSIONS OF THE PROJECT EXCEPT BY AGREEMENT IN WRITING AND WITH APPROPRIATE COMPENSATION TO THE ENGINEER.

ALL WORK SHALL COMPLY WITH APPLICABLE CODES AND TRADE STANDARDS WHICH GOVERN EACH PHASE OF WORK INCLUDING, BUT NOT LIMITED TO, CALIFORNIA MECHANICAL CODE, CALIFORNIA PLUMBING CODE, CALIFORNIA ELECTRICAL CODE, CALIFORNIA FIRE CODE, CALTRANS STANDARDS AND SPECIFICATIONS, AND ALL APPLICABLE STATE AND/OR LOCAL CODES AND/OR LEGISLATION.

IT IS THE RESPONSIBILITY OF THE CONTRACTOR AND ALL SUBCONTRACTORS TO CHECK AND VERIFY ALL CONDITIONS, DIMENSIONS, LINES AND LEVELS INDICATED. PROPER FIT AND ATTACHMENT OF ALL PARTS IS REQUIRED. SHOULD THERE BE ANY DISCREPANCIES, IMMEDIATELY NOTIFY THE ENGINEER FOR CORRECTION OR ADJUSTMENT THE EVENT OF FAILURE TO DO SO, THE CONTRACTOR SHALL BE RESPONSIBLE FOR CORRECTION OF ANY ERROR.

ALL DIMENSIONS AND CONDITIONS SHALL BE CHECKED AND VERIFIED ON THE JOB BY EACH SUBCONTRACTOR BEFORE HE/SHE BEGINS HIS/HER WORK. ANY ERRORS, OMISSION, OR DISCREPANCIES SHALL BE BROUGHT TO THE ATTENTION OF THE OWNER/CONTRACTOR BEFORE CONSTRUCTION BEGINS.

COMMENCEMENT OF WORK BY THE CONTRACTOR AND/OR ANY SUBCONTRACTOR SHALL INDICATE KNOWLEDGE AND ACCEPTANCE OF ALL CONDITIONS DESCRIBED IN THESE CONSTRUCTION DOCUMENTS, OR EXISTING ON SITE, WHICH COULD AFFECT THEIR WORK.

WORK SEQUENCE

IN THE EVENT ANY SPECIAL SEQUENCING OF THE WORK IS REQUIRED BY THE OWNER OR THE CONTRACTOR, THE CONTRACTOR SHALL ARRANGE A CONFERENCE BEFORE ANY SUCH WORK IS BEGUN.

SITE EXAMINATION: THE CONTRACTOR AND ALL SUBCONTRACTORS SHALL THOROUGHLY EXAMINE THE SITE AND FAMILIARIZE HIM/HERSELF WITH THE CONDITIONS UNDER WHICH THE WORK IS TO BE PERFORMED. THE CONTRACTOR SHALL VERIFY AT THE SITE ALL MEASUREMENTS AFFECTING HIS/HER WORK AND SHALL BE RESPONSIBLE FOR THE CORRECTIONS OF THE SAME. NO EXTRA COMPENSATION WILL BE ALLOWED TO THE CONTRACTOR FOR EXPENSES DUE TO HIS/HER NEGLECT TO EXAMINE, OR FAILURE TO DISCOVER, CONDITIONS WHICH AFFECT HIS/HER WORK.

LEA AND BRAZE ENGINEERING, INC. EXPRESSLY RESERVES ITS COMMON LAW COPYRIGHT AND OTHER PROPERTY RIGHTS IN THESE PLANS. THESE PLANS ARE NOT TO BE REPRODUCED, CHANGED OR COPIED IN ANY FORM OR MANNER WHATSOEVER, NOR ARE THEY TO BE ASSIGNED TO A THIRD PARTY WITHOUT FIRST OBTAINING THE WRITTEN PERMISSION AND CONSENT OF LEA AND BRAZE ENGINEERING, INC. IN THE EVENT OF UNAUTHORIZED REUSE OF THESE PLANS BY A THIRD PARTY, THE THIRD PARTY SHALL HOLD HARMLESS LEA AND BRAZE ENGINEERING, INC.

CONSTRUCTION IS ALWAYS LESS THAN PERFECT SINCE PROJECTS REQUIRE THE COORDINATION AND INSTALLATION OF MANY INDIVIDUAL COMPONENTS BY VARIOUS CONSTRUCTION INDUSTRY TRADES. THESE DOCUMENTS CANNOT PORTRAY ALL COMPONENTS OR ASSEMBLIES EXACTLY. IT IS THE INTENTION OF THESE ENGINEERING DOCUMENTS THAT THEY REPRESENT A REASONABLE STANDARD OF CARE IN THEIR CONTENT. IT IS ALSO PRESUMED BY THESE DOCUMENTS THAT CONSTRUCTION REVIEW SERVICES WILL BE PROVIDED BY THE ENGINEER. SHOULD THE OWNER NOT RETAIN THE ENGINEER TO PROVIDE SUCH SERVICES, OR SHOULD HE/SHE RETAIN THE ENGINEER TO PROVIDE ONLY PARTIAL OR LIMITED SERVICES, THEN IT SHALL BE THE OWNER'S AND CONTRACTOR'S RESPONSIBILITY TO FULLY RECOGNIZE AND PROVIDE THAT STANDARD OF CARE.

IF THE OWNER OR CONTRACTOR OBSERVES OR OTHERWISE BECOMES AWARE OF ANY FAULT OR DEFECT IN THE PROJECT OR NONCONFORMANCE WITH THE CONTRACT DOCUMENTS, PROMPT WRITTEN NOTICE THEREOF SHALL BE GIVEN BY THE OWNER AND/OR CONTRACTOR TO THE ENGINEER.

THE ENGINEER SHALL NOT HAVE CONTROL OF OR CHARGE OF AND SHALL NOT BE RESPONSIBLE FOR CONSTRUCTION MEANS, METHODS, TECHNIQUES, SEQUENCES, OR PROCEDURES, OR FOR SAFETY PRECAUTIONS AND PROGRAMS IN CONNECTION WITH THE WORK, FOR THE ACTS OR OMISSIONS OF THE CONTRACTOR, SUBCONTRACTORS, OR ANY OTHER PERSONS PERFORMING ANY OF THE WORK, OR FOR THE FAILURE OF ANY OF THEM TO CARRY OUT THE WORK IN ACCORDANCE WITH THE CONTRACT DOCUMENTS.

SITE PROTECTION

PROTECT ALL LANDSCAPING THAT IS TO REMAIN. ANY DAMAGE OR LOSS RESULTING FROM EXCAVATION, GRADING, OR CONSTRUCTION WORK SHALL BE CORRECTED OR REPLACED BY THE CONTRACTOR AT NO ADDITIONAL COST TO THE OWNER. THE CONTRACTOR SHALL BE RESPONSIBLE FOR THE LOCATION OF ALL EXISTING SITE UTILITIES AND SHALL COORDINATE THEIR REMOVAL OR MODIFICATIONS (IF ANY) TO AVOID ANY INTERRUPTION OF SERVICE TO ADJACENT AREAS. THE GENERAL CONTRACTOR SHALL INFORM HIM/HERSELF OF MUNICIPAL REGULATIONS AND CARRY OUT HIS/HER WORK IN COMPLIANCE WITH ALL FEDERAL AND STATE REQUIREMENTS TO REDUCE FIRE HAZARDS AND INJURIES TO THE PUBLIC.

STORMWATER POLLUTION PREVENTION NOTES

1) STORE, HANDLE, AND DISPOSE OF CONSTRUCTION MATERIALS AND WASTES PROPERLY, SO AS TO PREVENT THEIR CONTACT WITH STORMWATER.

2) CONTROL AND PREVENT THE DISCHARGE OF ALL POTENTIAL POLLUTANTS, INCLUDING SOLID WASTES, PAINTS, CONCRETE, PETROLEUM PRODUCTS, CHEMICALS, WASH WATER OR SEDIMENT, AND NON-STORMWATER DISCHARGES TO STORM DRAINS AND WATER COURSES.

3) USE SEDIMENT CONTROL OR FILTRATION TO REMOVE SEDIMENT FROM DEWATERING EFFLUENT.

4) AVOID CLEANING, FUELING, OR MAINTAINING VEHICLES ON SITE, EXCEPT IN A DESIGNATED AREA IN WHICH RUNOFF IS CONTAINED AND TREATED.

5) DELINEATE CLEARING LIMITS, EASEMENTS, SETBACKS, SENSITIVE OR CRITICAL AREAS, BUFFER ZONES, TREES AND DISCHARGE COURSE WITH FIELD MARKERS.

6) PROTECT ADJACENT PROPERTIES AND UNDISTURBED AREAS FROM CONSTRUCTION IMPACTS USING VEGETATIVE BUFFER STRIPS, SEDIMENT BARRIERS OF FILTERS, DIKES, MULCHING, OR OTHER MEASURES AS APPROPRIATE.

7) PERFORM CLEARING AND EARTH MOVING ACTIVITIES DURING DRY WEATHER TO THE MAXIMUM EXTENT PRACTICAL.

8) LIMIT AND TIME APPLICATIONS OF PESTICIDES AND FERTILIZERS TO PREVENT POLLUTED RUNOFF.

9) LIMIT CONSTRUCTION ACCESS ROUTES AND STABILIZE DESIGNATED ACCESS POINTS.

10) AVOID TRACKING DIRT OR MATERIALS OFF-SITE; CLEAN OFF-SITE PAVED AREAS AND SIDEWALKS USING DRY SWEEPING METHODS TO THE MAXIMUM EXTENT PRACTICAL.

SUPPLEMENTAL MEASURES

A. THE PHRASE "NO DUMPING - DRAINS TO BAY" OR EQUALLY EFFECTIVE PHRASE MUST BE LABELED ON STORM DRAIN INLETS (BY STENCILING, BRANDING, OR PLAQUES) TO ALERT THE PUBLIC TO THE DESTINATION OF STORM WATER AND TO PREVENT DIRECT DISCHARGE OF POLLUTANTS INTO THE STORM DRAIN.

B. USING FILTRATION MATERIALS ON STORM DRAIN COVERS TO REMOVE SEDIMENT FROM DEWATERING EFFLUENT.

C. STABILIZING ALL DENUDED AREAS AND MAINTAINING EROSION CONTROL MEASURES CONTINUOUSLY FROM **OCTOBER 15** AND **APRIL 15.**

D. REMOVING SPOILS PROMPTLY, AND AVOID STOCKPILING OF FILL MATERIALS, WHEN RAIN IS FORECAST. IF RAIN THREATENS, STOCKPILED SOILS AND OTHER MATERIALS SHALL BE COVERED WITH A TARP OR OTHER WATERPROOF MATERIAL.

E. STORING, HANDLING, AND DISPOSING OF CONSTRUCTION MATERIALS AND WASTES SO AS TO AVOID THEIR ENTRY TO THE STORM DRAIN SYSTEMS OR WATER BODY.

F. AVOIDING CLEANING, FUELING, OR MAINTAINING VEHICLES ON-SITE, EXCEPT IN AN AREA DESIGNATED TO CONTAIN AND TREAT RUNOFF.

GRADING & DRAINAGE NOTES:

1. SCOPE OF WORK

THESE SPECIFICATIONS AND APPLICABLE PLANS PERTAIN TO AND INCLUDE ALL SITE GRADING AND EARTHWORK ASSOCIATED WITH THE PROJECT INCLUDING, BUT NOT LIMITED TO THE FURNISHING OF ALL LABOR, TOOLS AND EQUIPMENT NECESSARY FOR SITE CLEARING AND GRUBBING, SITE PREPARATION, DISPOSAL OF EXCESS OR UNSUITABLE MATERIAL, STRIPPING, KEYING, EXCAVATION, OVER EXCAVATION, RECOMPACTION PREPARATION FOR SOIL RECEIVING FILL, PAVEMENT, FOUNDATION OF SLABS, EXCAVATION, IMPORTATION OF ANY REQUIRED FILL MATERIAL, PROCESSING, PLACEMENT AND COMPACTION OF FILL AND SUBSIDIARY WORK NECESSARY TO COMPLETE THE GRADING TO CONFORM TO THE LINES, GRADING AND SLOPE SHOWN ON THE PROJECT GRADING PLANS.

2. GENERAL

A. ALL SITE GRADING AND EARTHWORK SHALL CONFORM TO THE RECOMMENDATIONS OF THESE SPECIFICATIONS, THE SOILS REPORT BY ROMIG ENGINEERS; AND THE COUNTY OF SAN MATEO.

B. ALL FILL MATERIALS SHALL BE DENSIFIED SO AS TO PRODUCE A DENSITY NOT LESS THAN 90% RELATIVE COMPACTION BASED UPON ASTM TEST DESIGNATION D1557. FIELD DENSITY TEST WILL BE PERFORMED IN ACCORDANCE WITH ASTM TEST DESIGNATION 2922 AND 3017. THE LOCATION AND FREQUENCY OF THE FIELD DENSITY TEST WILL BE AS DETERMINED BY THE SOIL ENGINEER. THE RESULTS OF THESE TESTS AND COMPLIANCE WITH THE SPECIFICATIONS WILL BE THE BASIS UPON WHICH SATISFACTORY COMPLETION OF THE WORK WILL BE JUDGED BY THE SOIL ENGINEER. ALL CUT AND FILL SLOPES SHALL BE CONSTRUCTED AS SHOWN ON PLANS, BUT NO STEEPER THAN TWO (2) HORIZONTAL TO ONE (1) VERTICAL.

C. THE CONTRACTOR SHALL BE RESPONSIBLE FOR THE SATISFACTORY COMPLETION OF ALL THE EARTHWORK IN ACCORDANCE WITH THESE PLANS AND SPECIFICATIONS. NO DEVIATION FROM THESE SPECIFICATIONS SHALL BE MADE EXCEPT UPON WRITTEN APPROVAL BY THE SOILS ENGINEER. BOTH CUT AND FILL AREAS SHALL BE SURFACE COMPLETED TO THE SATISFACTION OF THE SOILS ENGINEER AT THE CONCLUSION OF ALL GRADING OPERATIONS AND PRIOR TO FINAL ACCEPTANCE. THE CONTRACTOR SHALL NOTIFY THE SOILS ENGINEER AT LEAST TWO (2) WORKING DAYS PRIOR TO DOING ANY SITE GRADING AND EARTHWORK INCLUDING CLEARING.

3. CLEARING AND GRUBBING

A. THE CONTRACTOR SHALL ACCEPT THE SITE IN ITS PRESENT CONDITION. ALL EXISTING PUBLIC IMPROVEMENTS SHALL BE PROTECTED. ANY IMPROVEMENTS DAMAGED SHALL BE REPLACED BY THE CONTRACTOR AS DIRECTED BY THE LOCAL JURISDICTION WITH NO EXTRA COMPENSATION.

B. ALL ABANDONED BUILDINGS AND FOUNDATIONS, TREE (EXCEPT THOSE SPECIFIED TO REMAIN FOR LANDSCAPING PURPOSES), FENCES, VEGETATION AND ANY SURFACE DEBRIS SHALL BE REMOVED AND DISPOSED OF OFF THE SITE BY THE CONTRACTOR.

C. ALL ABANDONED SEPTIC TANKS AND ANY OTHER SUBSURFACE STRUCTURES EXISTING IN PROPOSED DEVELOPMENT AREAS SHALL BE REMOVED PRIOR TO ANY GRADING OR FILL OPERATION. ALL APPURTENANT DRAIN FIELDS AND OTHER CONNECTING LINES MUST ALSO BE TOTALLY REMOVED.

D. ALL ABANDONED UNDERGROUND IRRIGATION OR UTILITY LINES SHALL BE REMOVED OR DEMOLISHED. THE APPROPRIATE FINAL DISPOSITION OF SUCH LINES DEPEND UPON THEIR DEPTH AND LOCATION AND THE METHOD OF REMOVAL OR DEMOLITION SHALL BE DETERMINED BY THE SOILS ENGINEER. ONE OF THE FOLLOWING METHODS WILL BE USED:

(1) EXCAVATE AND TOTALLY REMOVE THE UTILITY LINE FROM THE TRENCH.

(2) EXCAVATE AND CRUSH THE UTILITY LINE IN THE TRENCH.

(3) CAP THE ENDS OF THE UTILITY LINE WITH CONCRETE TO PREVENT THE ENTRANCE OF WATER. THE LOCATIONS AT WHICH THE UTILITY LINE WILL BE CAPPED WILL BE DETERMINED BY THE UTILITY DISTRICT ENGINEER. THE LENGTH OF THE CAP SHALL NOT BE LESS THAN FIVE FEET, AND THE CONCRETED MIX EMPLOYED SHALL HAVE MINIMUM SHRINKAGE.

4. SITE PREPARATION AND STRIPPING

A. ALL SURFACE ORGANICS SHALL BE STRIPPED AND REMOVED FROM BUILDING PADS, AREAS TO RECEIVE COMPACTED FILL AND PAVEMENT AREAS.

B. UPON THE COMPLETION OF THE ORGANIC STRIPPING OPERATION, THE GROUND SURFACE (NATIVE SOIL SUBGRADE) OVER THE ENTIRE AREA OF ALL BUILDING PADS, STREET AND PAVEMENT AREAS AND ALL AREAS TO RECEIVE COMPACTED FILL SHALL BE PLOWED OR SCARIFIED UNTIL THE SURFACE IS FREE OF RUTS, HUMMOCKS OR OTHER UNEVEN FEATURES WHICH MAY INHIBIT UNIFORM SOIL COMPACTION. THE GROUND SURFACE SHALL THEN BE DISCED OR BLADED TO A DEPTH OF AT LEAST 6 INCHES. UPON ENGINEER'S SATISFACTION, THE NEW SURFACE SHALL BE WATER CONDITIONED AND RECOMPACTED PER REQUIREMENTS FOR COMPACTING FILL MATERIAL.

5. EXCAVATION

A. UPON COMPLETION OF THE CLEARING AND GRUBBING, SITE PREPARATION AND STRIPPING, THE CONTRACTOR SHALL MAKE EXCAVATIONS TO LINES AND GRADES NOTED ON THE PLAN. WHERE REQUIRED BY THE SOILS ENGINEER, UNACCEPTABLE NATIVE SOILS OR UNENGINEERED FILL SHALL BE OVER EXCAVATED BELOW THE DESIGN GRADE. SEE PROJECT SOILS REPORT FOR DISCUSSION OF OVER EXCAVATION OF THE UNACCEPTABLE MATERIAL. RESULTING GROUND LINE SHALL BE SCARIFIED, MOISTURE-CONDITIONED AND RECOMPACTED AS SPECIFIED IN SECTION 4 OF THESE SPECIFICATIONS. COMPACTED FILL MATERIAL SHALL BE PLACED TO BRING GROUND LEVEL BACK TO DESIGN GRADE.

B. EXCAVATED MATERIALS SUITABLE FOR COMPACTED FILL MATERIAL SHALL BE UTILIZED IN MAKING THE REQUIRED COMPACTED FILLS. THOSE NATIVE MATERIALS CONSIDERED UNSUITABLE BY THE SOILS ENGINEER SHALL BE DISPOSED OF OFF THE SITE BY THE CONTRACTOR.

6. PLACING, SPREADING AND COMPACTING FILL MATERIAL

A. FILL MATERIALS

THE MATERIALS PROPOSED FOR USE AS COMPACTED FILL SHALL BE APPROVED BY THE SOILS ENGINEER BEFORE COMMENCEMENT OF GRADING OPERATIONS. THE NATIVE MATERIAL IS CONSIDERED SUITABLE FOR FILL; HOWEVER, ANY NATIVE MATERIAL DESIGNATED UNSUITABLE BY THE SOILS ENGINEER SHALL BE REMOVED FROM THE SITE BY THE CONTRACTOR. ANY IMPORTED MATERIAL SHALL BE APPROVED FOR USE BY THE SOILS ENGINEER, IN WRITING, BEFORE BEING IMPORTED TO THE SITE AND SHALL POSSESS SUFFICIENT FINES TO PROVIDE A COMPETENT SOIL MATRIX AND SHALL BE FREE OF VEGETATIVE AND ORGANIC MATTER AND OTHER DELETERIOUS MATERIALS. ALL FILL VOIDS SHALL BE FILLED AND PROPERLY COMPACTED. NO ROCKS LARGER THAN THREE INCHES IN DIAMETER SHALL BE PERMITTED.

B. FILL CONSTRUCTION

THE SOILS ENGINEER SHALL APPROVE THE NATIVE SOIL SUBGRADE BEFORE PLACEMENT OF ANY COMPACTED FILL MATERIAL. UNACCEPTABLE NATIVE SOIL SHALL BE REMOVED AS DIRECTED BY THE SOILS ENGINEER. THE RESULTING GROUND LINE SHALL BE SCARIFIED MOISTURE CONDITIONED AND RECOMPACTED AS SPECIFIED IN SECTION 4 OF THESE SPECIFICATIONS. COMPACTED FILL MATERIAL SHALL BE PLACED TO BRING GROUND LEVEL BACK TO DESIGN GRADE. GROUND PREPARATION SHALL BE FOLLOWED CLOSELY BY FILL PLACEMENT TO PREVENT DRYING OUT OF THE SUBSOIL BEFORE PLACEMENT OF THE FILL.

THE APPROVED FILL MATERIALS SHALL BE PLACED IN UNIFORM HORIZONTAL LAYERS NO THICKER THAN 8" IN LOOSE THICKNESS. LAYERS SHALL BE SPREAD EVENLY AND SHALL BE THOROUGHLY BLADE MIXED DURING THE SPREADING TO ENSURE UNIFORMITY OF MATERIAL IN EACH LAYER. THE SCARIFIED SUBGRADE AND FILL MATERIAL SHALL BE MOISTURE CONDITIONED TO AT LEAST OPTIMUM MOISTURE. WHEN THE MOISTURE CONTENT OF THE FILL IS BELOW THAT SPECIFIED, WATER SHALL BE ADDED UNTIL THE MOISTURE DURING THE COMPACTION PROCESS. WHEN THE MOISTURE CONTENT OF THE FILL IS ABOVE THAT SPECIFIED, THE FILL MATERIAL SHALL BE AERATED BY BLADING OR OTHER SATISFACTORY METHODS UNTIL THE MOISTURE CONTENT IS AS SPECIFIED.

AFTER EACH LAYER HAS BEEN PLACED, MIXED, SPREAD EVENLY AND MOISTURE CONDITIONED, IT SHALL BE COMPACTED TO AT LEAST THE SPECIFIED DENSITY.

THE FILL OPERATION SHALL BE CONTINUED IN COMPACTED LAYERS AS SPECIFIED ABOVE UNTIL THE FILL HAS BEEN BROUGHT TO THE FINISHED SLOPES AND GRADES AS SHOWN ON THE PLANS. NO LAYER SHALL BE ALLOWED TO DRY OUT BEFORE SUBSEQUENT LAYERS ARE PLACED.

COMPACTION EQUIPMENT SHALL BE OF SUCH DESIGN THAT IT WILL BE ABLE TO COMPACT THE FILL TO THE SPECIFIED MINIMUM COMPACTION WITHIN THE SPECIFIED MOISTURE CONTENT RANGE. COMPACTION OF EACH LAYER SHALL BE CONTINUOUS OVER ITS ENTIRE AREA UNTIL THE REQUIRED MINIMUM DENSITY HAS BEEN OBTAINED.

7. CUT OR FILL SLOPES

ALL CONSTRUCTED SLOPES, BOTH CUT AND FILL, SHALL BE NO STEEPER THAN 2 TO 1 (HORIZONTAL TO VERTICAL). DURING THE GRADING OPERATION, COMPACTED FILL SLOPES SHALL BE OVERFILLED BY AT LEAST ONE FOOT HORIZONTALLY AT THE COMPLETION OF THE GRADING OPERATIONS, THE EXCESS FILL EXISTING ON THE SLOPES SHALL BE BLADED OFF TO CREATE THE FINISHED SLOPE EMBANKMENT. ALL CUT AND FILL SLOPES SHALL BE TRACK WALKED AFTER BEING BROUGHT TO FINISH GRADE AND THEN BE PLANTED WITH EROSION CONTROL SLOPE PLANTING. THE SOILS ENGINEER SHALL REVIEW ALL CUT SLOPES TO DETERMINE IF ANY ADVERSE GEOLOGIC CONDITIONS ARE EXPOSED. IF SUCH CONDITIONS DO OCCUR, THE SOILS ENGINEER SHALL RECOMMEND THE APPROPRIATE MITIGATION MEASURES AT THE TIME OF THEIR DETECTION.

8. SEASONAL LIMITS AND DRAINAGE CONTROL

FILL MATERIALS SHALL NOT BE PLACED, SPREAD OR COMPACTED WHILE IT IS AT AN UNSUITABLY HIGH MOISTURE CONTENT OR DURING OTHERWISE UNFAVORABLE CONDITIONS. WHEN THE WORK IS INTERRUPTED FOR ANY REASON THE FILL OPERATIONS SHALL NOT BE RESUMED UNTIL FIELD TEST PERFORMED BY THE SOILS ENGINEER INDICATE THAT THE MOISTURE CONDITIONS IN AREAS TO BE FILLED ARE AS PREVIOUSLY SPECIFIED. ALL EARTH MOVING AND WORKING OPERATIONS SHALL BE CONTROLLED TO PREVENT WATER FROM RUNNING INTO EXCAVATED AREAS. ALL EXCESS WATER SHALL BE PROMPTLY REMOVED AND THE SITE KEPT DRY.

9. DUST CONTROL

THE CONTRACTOR SHALL TAKE ALL STEPS NECESSARY FOR THE ALLEVIATION OR PREVENTION OF ANY DUST NUISANCE ON OR ABOUT THE SITE CAUSED BY THE CONTRACTOR'S OPERATION EITHER DURING THE PERFORMANCE OF THE GRADING OR RESULTING FROM THE CONDITION IN WHICH THE CONTRACTOR LEAVES THE SITE. THE CONTRACTOR SHALL ASSUME ALL LIABILITY INCLUDING COURT COST OF CO-DEFENDANTS FOR ALL CLAIMS RELATED TO DUST OR WIND-BLOWN MATERIALS ATTRIBUTABLE TO HIS WORK. COST FOR THIS ITEM OF WORK IS TO BE INCLUDED IN THE EXCAVATION ITEM AND NO ADDITIONAL COMPENSATION SHALL BE ALLOWED.

10. INDEMNITY

THE CONTRACTOR WILL HOLD HARMLESS, INDEMNIFY AND DEFEND THE ENGINEER, THE OWNER AND HIS CONSULTANTS AND EACH OF THEIR OFFICERS AND EMPLOYEES AND AGENTS, FROM ANY AND ALL LIABILITY CLAIMS, LOSSES OR DAMAGE ARISING OR ALLEGED TO HEREIN, BUT NOT INCLUDING THE SOLE NEGLIGENCE OF THE OWNER, THE ARCHITECT, THE ENGINEER AND HIS CONSULTANTS AND EACH OF THEIR OFFICERS AND EMPLOYEES AND AGENTS.

11. SAFETY

IN ACCORDANCE WITH GENERALLY ACCEPTED CONSTRUCTION PRACTICES, THE CONTRACTOR WILL BE SOLELY AND COMPLETELY RESPONSIBLE FOR CONDITIONS OF THE JOB SITE. INCLUDING SAFETY OF ALL PERSONS AND PROPERTY DURING PERFORMANCE OF THE WORK. THIS REQUIREMENT WILL APPLY CONTINUOUSLY AND NOT BE LIMITED TO NORMAL WORKING HOURS.

THE DUTY OF THE ENGINEERS TO CONDUCT CONSTRUCTION REVIEW OF THE CONTRACTOR'S PERFORMANCE IS NOT INTENDED TO INCLUDE REVIEW OF THE ADEQUACY OF THE CONTRACTOR'S SAFETY MEASURES, IN, ON OR NEAR THE CONSTRUCTION SITE.

12. GUARANTEE

NEITHER THE FINAL PAYMENT, NOR THE PROVISIONS IN THE CONTRACT, NOR PARTIAL, NOR ENTIRE USE OR OCCUPANCY OF THE PREMISES BY THE OWNER SHALL CONSTITUTE AN ACCEPTANCE OF THE WORK NOT DONE IN ACCORDANCE WITH THE CONTRACT OR RELIEVES THE CONTRACTOR OF LIABILITY IN RESPECT TO ANY EXPRESS WARRANTIES OR RESPONSIBILITY FOR FAULTY MATERIAL OR WORKMANSHIP.

THE CONTRACTOR SHALL REMEDY ANY DEFECTS IN WORK AND PAY FOR ANY DAMAGE TO OTHER WORK RESULTING THERE FROM WHICH SHALL APPEAR WITHIN A PERIOD OF ONE (1) CALENDAR YEAR FROM THE DATE OF FINAL ACCEPTANCE OF THE WORK.

13. TRENCH BACKFILL

EITHER THE ON-SITE INORGANIC SOIL OR APPROVED IMPORTED SOIL MAY BE USED AS TRENCH BACKFILL. THE BACKFILL MATERIAL SHALL BE MOISTURE CONDITIONED PER THESE SPECIFICATIONS AND SHALL BE PLACED IN LIFTS OF NOT MORE THAN SIX INCHES IN HORIZONTAL UNCOMPACTED LAYERS AND BE COMPACTED BY MECHANICAL MEANS TO A MINIMUM OF 90% RELATIVE COMPACTION. IMPORTED SAND MAY BE USED FOR TRENCH BACKFILL MATERIAL PROVIDED IT IS COMPACTED TO AT LEAST 90% RELATIVE COMPACTION. WATER JETTING ASSOCIATED WITH COMPACTION USING VIBRATORY EQUIPMENT WILL BE PERMITTED ONLY WITH IMPORTED SAND BACKFILL WITH THE APPROVAL OF THE SOILS ENGINEER. ALL PIPES SHALL BE BEDDED WITH SAND EXTENDING FROM THE TRENCH BOTTOM TO TWELVE INCHES ABOVE THE PIPE. SAND BEDDING IS TO BE COMPACTED AS SPECIFIED ABOVE FOR SAND BACKFILL.

14. EROSION CONTROL

A. ALL GRADING, EROSION AND SEDIMENT CONTROL AND RELATED WORK UNDERTAKEN ON THIS SITE IS SUBJECT TO ALL TERMS AND CONDITIONS OF THE COUNTY GRADING ORDINANCE AND MADE A PART HEREOF BY REFERENCE.

B. THE CONTRACTOR WILL BE LIABLE FOR ANY AND ALL DAMAGES TO ANY PUBLICLY OWNED AND MAINTAINED ROAD CAUSED BY THE AFORESAID CONTRACTOR'S GRADING ACTIVITIES, AND SHALL BE RESPONSIBLE FOR THE CLEANUP OF ANY MATERIAL SPILLED ON ANY PUBLIC ROAD ON THE HAUL ROUTE.

C. THE EROSION CONTROL MEASURES ARE TO BE OPERABLE DURING THE RAINY SEASON, GENERALLY FROM OCTOBER 15 TO APRIL 15. EROSION CONTROL PLANTING IS TO BE COMPLETED BY OCTOBER FIRST. NO GRADING OR UTILITY TRENCHING SHALL OCCUR BETWEEN OCTOBER 15 AND APRIL 15 UNLESS AUTHORIZED BY THE LOCAL JURISDICTION.

D. ALL EROSION CONTROL MEASURES SHALL BE MAINTAINED UNTIL DISTURBED AREAS ARE STABILIZED AND CHANGES TO THIS EROSION AND SEDIMENT CONTROL PLAN SHALL BE MADE TO MEET FIELD CONDITIONS ONLY WITH THE APPROVAL OF OR AT THE DIRECTION OF THE SOILS ENGINEER.

E. DURING THE RAINY SEASON, ALL PAVED AREAS SHALL BE KEPT CLEAR OF EARTH MATERIAL AND DEBRIS. THE SITE SHALL BE MAINTAINED SO AS TO MINIMIZE SEDIMENT-LADEN RUNOFF TO ANY STORM DRAINAGE SYSTEM.

F. ALL EROSION CONTROL FACILITIES MUST BE INSPECTED AND REPAIRED AT THE END OF EACH WORKING DAY DURING THE RAINY SEASON.

G. WHEN NO LONGER NECESSARY AND PRIOR TO FINAL ACCEPTANCE OF DEVELOPMENT, SEDIMENT BASINS SHALL BE REMOVED OR OTHERWISE DEACTIVATED AS REQUIRED BY THE LOCAL JURISDICTION.

H. A CONSTRUCTION ENTRANCE SHALL BE PROVIDED AT ANY POINT OF EGRESS FROM THE SITE TO ROADWAY. A CONSTRUCTION ENTRANCE SHOULD BE COMPOSED OF COARSE DRAIN ROCK (2" TO 3") MINIMUM DIAMETER) AT LEAST EIGHT INCHES THICK BY FIFTY (50) FEET LONG BY TWENTY (20) FEET WIDE UNLESS SHOWN OTHERWISE ON PLAN AND SHALL BE MAINTAINED UNTIL THE SITE IS PAVED.

I. ALL AREAS SPECIFIED FOR HYDROSEEDING SHALL BE NOZZLE PLANTED WITH STABILIZATION MATERIAL CONSISTING OF FIBER, SEED, FERTILIZER AND WATER, MIXED AND APPLIED IN THE FOLLOWING PROPORTIONS:

FIBER, 2000 LBS/ACRE
SEED, 200 LBS/ACRE (SEE NOTE J, BELOW)
FERTILIZER (11-8-4), 500 LBS/ACRE
WATER, AS REQUIRED FOR APPLICATION

J. SEED MIX SHALL BE PER CALTRANS STANDARDS.

K. WATER UTILIZED IN THE STABILIZATION MATERIAL SHALL BE OF SUCH QUALITY THAT IT WILL PROMOTE GERMINATION AND STIMULATE GROWTH OF PLANTS. IT SHALL BE FREE OF POLLUTANT MATERIALS AND WEED SEED.

L. HYDROSEEDING SHALL CONFORM TO THE PROVISIONS OF SECTION 20, EROSION CONTROL AND HIGHWAY PLANTING", OF THE STANDARD SPECIFICATIONS OF THE STATE OF CALIFORNIA DEPARTMENT OF TRANSPORTATION, AS LAST REVISED.

M. A DISPERSING AGENT MAY BE ADDED TO THE HYDROSEEDING MATERIAL, PROVIDED THAT THE CONTRACTOR FURNISHES SUITABLE EVIDENCE THAT THE ADDITIVE WILL NOT ADVERSELY AFFECT THE PERFORMANCE OF THE SEEDING MIXTURE.

N. STABILIZATION MATERIALS SHALL BE APPLIED AS SOON AS PRACTICABLE AFTER COMPLETION OF GRADING OPERATIONS AND PRIOR TO THE ONSET OF WINTER RAINS, OR AT SUCH OTHER TIME AS DIRECTED BY THE COUNTY ENGINEER. THE MATERIAL SHALL BE APPLIED BEFORE INSTALLATION OF OTHER LANDSCAPING MATERIALS SUCH AS TREES, SHRUBS AND GROUND COVERS.

O. THE STABILIZATION MATERIAL SHALL BE APPLIED WITHIN 4-HOURS AFTER MIXING. MIXED MATERIAL NOT USED WITHIN 4-HOURS SHALL BE REMOVED FROM THE SITE.

P. THE CONTRACTOR SHALL MAINTAIN THE SOIL STABILIZATION MATERIAL AFTER PLACEMENT. THE COUNTY ENGINEER MAY REQUIRE SPRAY APPLICATION OF WATER OR OTHER MAINTENANCE ACTIVITIES TO ASSURE THE EFFECTIVENESS OF THE STABILIZATION PROCESS. APPLICATION OF WATER SHALL BE ACCOMPLISHED USING NOZZLES THAT PRODUCE A SPRAY THAT DOES NOT CONCENTRATE OR WASH AWAY THE STABILIZATION MATERIALS.

15. CLEANUP

THE CONTRACTOR MUST MAINTAIN THE SITE CLEAN, SAFE AND IN USABLE CONDITION. ANY SPILLS OF SOIL, ROCK OR CONSTRUCTION MATERIAL MUST BE REMOVED FROM THE SITE BY THE CONTRACTOR DURING CONSTRUCTION AND UPON COMPLETION OF THE PROJECT. COST FOR THIS ITEM OF WORK SHALL BE INCLUDED IN THE EXCAVATION AND COMPACTION ITEM AND NO ADDITIONAL COMPENSATION SHALL BE ALLOWED.

NOTE:
THESE NOTES ARE INTENDED TO BE USED AS A GENERAL GUIDELINE. THE REFERENCED SOILS REPORT FOR THE PROJECT AND GOVERNING AGENCY GRADING ORDINANCE SHALL SUPERSEDE THESE NOTES. THE SOILS ENGINEER MAY MAKE ON-SITE RECOMMENDATIONS DURING GRADING OPERATIONS.

REGISTERED PROFESSIONAL ENGINEER
JAMES TOBY
No. 63127
CIVIL
STATE OF CALIFORNIA
ORIGINAL SIGNATURES IN BLUE INK

LEA & BRAZE ENGINEERING, INC.
CIVIL ENGINEERS I LAND SURVEYORS
MAIN OFFICE:
2495 INDUSTRIAL PKWY WEST
HAYWARD, CALIFORNIA 94545
(510) 887-4086
REGIONAL OFFICES:
ROSEVILLE
DUBLIN
SAN JOSE
WWW.LEABRAZE.COM

CONLEY RESIDENCE
962 HILLCREST DRIVE
REDWOOD CITY, CALIFORNIA
UNINCORPORATED SAN MATEO COUNTY
APN: 058-263-040

GRADING SPECIFICATIONS

REVISIONS	BY
-	-
-	-
-	-
-	-
-	-

JOB NO: 2250691
DATE: 10-09-25
SCALE: NO SCALE
DESIGN BY: JPMR
CHECKED BY: CP
SHEET NO:
C-5.0
8 OF 11 SHEETS

PURPOSE:

THE PURPOSE OF THIS PLAN IS TO STABILIZE THE SITE TO PREVENT EROSION OF GRADED AREAS AND TO PREVENT SEDIMENTATION FROM LEAVING THE CONSTRUCTION AREA AND AFFECTING NEIGHBORING SITES, NATURAL AREAS, PUBLIC FACILITIES OR ANY OTHER AREA THAT MIGHT BE AFFECTED BY SEDIMENTATION. ALL MEASURES SHOWN ON THIS PLAN SHOULD BE CONSIDERED THE MINIMUM REQUIREMENTS NECESSARY. SHOULD FIELD CONDITIONS DICTATE ADDITIONAL MEASURES, SUCH MEASURES SHALL BE PER CALIFORNIA REGIONAL WATER QUALITY CONTROL BOARD'S FIELD MANUAL FOR EROSION AND SEDIMENTATION CONTROL AND THE CALIFORNIA STORM WATER QUALITY ASSOCIATION BEST MANAGEMENT PRACTICES HANDBOOK FOR CONSTRUCTION. LEA & BRAZE ENGINEERING SHOULD BE NOTIFIED IMMEDIATELY SHOULD CONDITIONS CHANGE.

EROSION CONTROL NOTES:

1. IT SHALL BE THE OWNER'S/CONTRACTOR'S RESPONSIBILITY TO MAINTAIN CONTROL OF THE ENTIRE CONSTRUCTION OPERATION AND TO KEEP THE ENTIRE SITE IN COMPLIANCE WITH THIS EROSION CONTROL PLAN.
2. THE INTENTION OF THIS PLAN IS FOR INTERIM EROSION AND SEDIMENT CONTROL ONLY. ALL EROSION CONTROL MEASURES SHALL CONFORM TO CALIFORNIA REGIONAL WATER QUALITY CONTROL BOARD'S FIELD MANUAL FOR EROSION AND SEDIMENTATION CONTROL, THE CALIFORNIA STORM WATER QUALITY ASSOCIATION BEST MANAGEMENT PRACTICES HANDBOOK FOR CONSTRUCTION, AND THE LOCAL GOVERNING AGENCY FOR THIS PROJECT.
3. OWNER/CONTRACTOR SHALL BE RESPONSIBLE FOR MONITORING EROSION AND SEDIMENT CONTROL MEASURES PRIOR TO, DURING, AND AFTER STORM EVENTS. PERSON IN CHARGE OF MAINTAINING EROSION CONTROL MEASURES SHOULD WATCH LOCAL WEATHER REPORTS AND ACT APPROPRIATELY TO MAKE SURE ALL NECESSARY MEASURES ARE IN PLACE.
4. SANITARY FACILITIES SHALL BE MAINTAINED ON THE SITE AT ALL TIMES.
5. DURING THE RAINY SEASON, ALL PAVED AREAS SHALL BE KEPT CLEAR OF EARTH MATERIAL AND DEBRIS. THE SITE SHALL BE MAINTAINED SO AS TO MINIMIZE SEDIMENT-LADEN RUNOFF TO ANY STORM DRAINAGE SYSTEM, INCLUDING EXISTING DRAINAGE SWALES AND WATERCOURSES.
6. CONSTRUCTION OPERATIONS SHALL BE CARRIED OUT IN SUCH A MANNER THAT EROSION AND WATER POLLUTION WILL BE MINIMIZED. COMPLIANCE WITH FEDERAL, STATE AND LOCAL LAWS CONCERNING POLLUTION SHALL BE MAINTAINED AT ALL TIMES.
7. CONTRACTOR SHALL PROVIDE DUST CONTROL AS REQUIRED BY THE APPROPRIATE FEDERAL, STATE AND LOCAL AGENCY REQUIREMENTS.
8. ALL MATERIALS NECESSARY FOR THE APPROVED EROSION CONTROL MEASURES SHALL BE IN PLACE BY OCTOBER 15.
9. EROSION CONTROL SYSTEMS SHALL BE INSTALLED AND MAINTAINED THROUGHOUT THE RAINY SEASON, OR FROM OCTOBER 15 THROUGH APRIL 15, WHICHEVER IS LONGER.
10. IN THE EVENT OF RAIN, ALL GRADING WORK IS TO CEASE IMMEDIATELY AND THE SITE IS TO BE SEALED IN ACCORDANCE WITH THE APPROVAL EROSION CONTROL MEASURES AND APPROVED EROSION CONTROL PLAN.
11. THE CONTRACTOR SHALL BE RESPONSIBLE FOR CHECKING AND REPAIRING EROSION CONTROL SYSTEMS AFTER EACH STORM.
12. ADDITIONAL EROSION CONTROL MEASURES MAY BE REQUIRED BY LOCAL JURISDICTION'S ENGINEERING DEPARTMENT OR BUILDING OFFICIALS.
13. MEASURES SHALL BE TAKEN TO COLLECT OR CLEAN ANY ACCUMULATION OR DEPOSIT OF DIRT, MUD, SAND, ROCKS, GRAVEL OR DEBRIS ON THE SURFACE OF ANY STREET, ALLEY OR PUBLIC PLACE OR IN ANY PUBLIC STORM DRAIN SYSTEMS. THE REMOVAL OF AFORESAID SHALL BE DONE BY STREET SWEEPING OR HAND SWEEPING. WATER SHALL NOT BE USED TO WASH SEDIMENTS INTO PUBLIC OR PRIVATE DRAINAGE FACILITIES.
14. EROSION CONTROL MEASURES SHALL BE ON-SITE FROM OCTOBER 15 THROUGH APRIL 15.
15. ALL EROSION CONTROL MEASURES SHALL BE INSTALLED AND MAINTAINED THROUGHOUT THE RAINY SEASON OR FROM OCTOBER 15 THROUGH APRIL 15, WHICHEVER IS GREATER.
16. PLANS SHALL BE DESIGNED TO MEET C3 REQUIREMENTS OF THE MUNICIPAL STORMWATER REGIONAL PERMIT ("MRP") NPDES PERMIT CAS 612008.
17. THE CONTRACTOR SHALL ADHERE TO NPDES (NATIONAL POLLUTION DISCHARGE ELIMINATION SYSTEM) BEST MANAGEMENT PRACTICES (BMP) FOR SEDIMENTATION PREVENTION AND EROSION CONTROL TO PREVENT DELETERIOUS MATERIALS OR POLLUTANTS FROM ENTERING THE CITY OR COUNTY STORM DRAIN SYSTEMS.
18. THE CONTRACTOR MUST INSTALL ALL EROSION AND SEDIMENT CONTROL MEASURES PRIOR TO THE INCEPTION OF ANY WORK ONSITE AND MAINTAIN THE MEASURES UNTIL THE COMPLETION OF ALL LANDSCAPING.
19. THE CONTRACTOR SHALL MAINTAIN ADJACENT STREETS IN A NEAT, CLEAN DUST FREE AND SANITARY CONDITION AT ALL TIMES AND TO THE SATISFACTION OF THE CITY INSPECTOR. THE ADJACENT STREET SHALL AT ALL TIMES BE KEPT CLEAN OF DEBRIS, WITH DUST AND OTHER NUISANCE BEING CONTROLLED AT ALL TIMES. THE CONTRACTOR BE RESPONSIBLE FOR ANY CLEAN UP ON ADJACENT STREETS AFFECTED BY THE BY THEIR CONSTRUCTION, METHOD OF STREET CLEANING SHALL BE BY DRY SWEEPING OF ALL PAVED AREAS. NO STOCKPILING OF BUILDING MATERIALS WITHIN THE CITY RIGHT-OF-WAY.
20. SEDIMENTS AND OTHER MATERIALS SHALL NOT BE TRACKED FROM THE SITE BY VEHICLE TRAFFIC. THE CONTRACTOR SHALL INSTALL A STABILIZED CONSTRUCTION ENTRANCE PRIOR TO THE INSPECTION OF ANY WORK ONSITE AND MAINTAIN IT FOR THE DURATION OF THE CONSTRUCTION PROCESS SO AS TO NOT INHIBIT SEDIMENTS FROM BEING DEPOSITED INTO THE PUBLIC RIGHT-OF-WAY UNTIL THE COMPLETION OF ALL LANDSCAPING.
21. THE CONTRACTOR SHALL PROTECT DOWN SLOPE DRAINAGE COURSES, STREAMS AND STORM DRAINS WITH ROCK FILLED SAND BAGS, TEMPORARY SWALES, SILT FENCES, AND EARTHEN BERMS IN CONJUNCTION OF ALL LANDSCAPING.
22. STOCKPILED MATERIALS SHALL BE COVERED WITH VISQUEEN OR A TARPAULIN UNTIL THE MATERIAL IS REMOVED FROM THE SITE. ANY REMAINING BARE SOIL THAT EXISTS AFTER THE STOCKPILE HAS BEEN REMOVED SHALL BE COVERED UNTIL A NATURAL GROUND COVER IS ESTABLISHED OR IT IS SEEDED OR PLANTED TO PROVIDE GROUND COVER PRIOR TO THE FALL RAINY SEASON.
23. EXCESS OR WASTE CONCRETE MUST NOT BE WASHED INTO THE PUBLIC RIGHT-OF-WAYOR ANY OTHER DRAINAGE SYSTEM. PROVISIONS SHALL BE MADE TO RETAIN CONCRETE WASTES ON SITE UNTIL THEY CAN BE DISPOSED OF AS SOLID WASTE.
24. TRASH AND CONSTRUCTION RELATED SOLID WASTES MUST BE DEPOSITED INTO A COVERED RECEPTACLE TO PREVENT CONTAMINATION AND DISPERSAL BY WIND

EROSION CONTROL NOTES CONTINUED:

25. FUELS, OILS, SOLVENTS AND OTHER TOXIC MATERIALS MUST BE STORED IN ACCORDANCE WITH THEIR LISTING AND ARE NOT TO CONTAMINATE THE SOIL AND SURFACE WATERS. ALL APPROVED STORAGE CONTAINERS ARE TO BE PROTECTED FROM THE WEATHER. SPILLS MUST BE CLEANED UP IMMEDIATELY AND DISPOSED OF IN A PROPER MANNER. SPILLS MUST NOT BE WASHED INTO THE DRAINAGE SYSTEM,
26. DUST CONTROL SHALL BE DONE BY WATERING AND AS OFTEN AS REQUIRED BY THE CITY INSPECTOR.
27. SILT FENCE(S) AND/OR FIBER ROLL(S) SHALL BE INSTALLED PRIOR TO OCTOBER 15 AND SHALL REMAIN IN PLACE UNTIL THE LANDSCAPING GROUND COVER IS INSTALLED. CONTRACTOR SHALL CONTINUOUSLY MONITOR THESE MEASURES, FOLLOWING AND DURING ALL RAIN EVENTS,TO PUBLIC OWNED FACILITIES.

EROSION CONTROL MEASURES:

1. THE FACILITIES SHOWN ON THIS PLAN ARE DESIGNED TO CONTROL EROSION AND SEDIMENT DURING THE RAINY SEASON, OCTOBER 15 TO APRIL 15. EROSION CONTROL FACILITIES SHALL BE IN PLACE PRIOR TO OCTOBER 15 OF ANY YEAR. GRADING OPERATIONS DURING THE RAINY SEASON WHICH LEAVE DENUDED SLOPES SHALL BE PROTECTED WITH EROSION CONTROL MEASURES IMMEDIATELY FOLLOWING GRADING ON THE SLOPES.
2. SITE CONDITIONS AT TIME OF PLACEMENT OF EROSION CONTROL MEASURES WILL VARY. APPROPRIATE ACTION INCLUDING TEMPORARY SWALES, INLETS, HYDROSEEDING, STRAW BALES, ROCK SACKS, ETC. SHALL BE TAKEN TO PREVENT EROSION AND SEDIMENTATION FROM LEAVING SITE. EROSION CONTROL MEASURES SHALL BE ADJUSTED AS THE CONDITIONS CHANGE AND THE NEED OF CONSTRUCTION SHIFT.
3. CONSTRUCTION ENTRANCES SHALL BE INSTALLED PRIOR TO COMMENCEMENT OF GRADING. ALL CONSTRUCTION TRAFFIC ENTERING ONTO THE PAVED ROADS MUST CROSS THE STABILIZED CONSTRUCTION ENTRANCES. CONTRACTOR SHALL MAINTAIN STABILIZED ENTRANCE AT EACH VEHICLE ACCESS POINT TO EXISTING PAVED STREETS. ANY MUD OR DEBRIS TRACKED ONTO PUBLIC STREETS SHALL BE REMOVED DAILY AND AS REQUIRED BY THE GOVERNING AGENCY.
4. ALL EXPOSED SLOPES THAT ARE NOT VEGETATED SHALL BE HYDROSEEDED. IF HYDROSEEDING IS NOT USED OR IS NOT EFFECTIVE BY OCTOBER 15, THEN OTHER IMMEDIATE METHODS SHALL BE IMPLEMENTED, SUCH AS EROSION CONTROL BLANKETS, OR A THREE-STEP APPLICATION OF 1) SEED, MULCH, FERTILIZER 2) BLOWN STRAW 3) TACKIFIER AND MULCH. HYDROSEEDING SHALL BE IN ACCORDANCE WITH THE PROVISIONS OF SECTION 20" EROSION CONTROL AND HIGHWAY PLANTING" OF THE STANDARD SPECIFICATION OF THE STATE OF CALIFORNIA DEPARTMENT OF TRANSPORTATION, AS LAST REVISED. REFER TO THE EROSION CONTROL SECTION OF THE GRADING SPECIFICATIONS THAT ARE A PART OF THIS PLAN SET FOR FURTHER INFORMATION.
5. INLET PROTECTION SHALL BE INSTALLED AT OPEN INLETS TO PREVENT SEDIMENT FROM ENTERING THE STORM DRAIN SYSTEM. INLETS NOT USED IN CONJUNCTION WITH EROSION CONTROL ARE TO BE BLOCKED TO PREVENT ENTRY OF SEDIMENT. MINIMUM INLET PROTECTION SHALL CONSIST OF A ROCK SACKS OR AS SHOWN ON THIS PLAN
6. THIS EROSION AND SEDIMENT CONTROL PLAN MAY NOT COVER ALL THE SITUATIONS THAT MAY ARISE DURING CONSTRUCTION DUE TO UNANTICIPATED FIELD CONDITIONS. VARIATIONS AND ADDITIONS MAY BE MADE TO THIS PLAN IN THE FIELD. A REPRESENTATIVE OF LEA & BRAZE ENGINEERING SHALL PERFORM A FIELD REVIEW AND MAKE RECOMMENDATIONS AS NEEDED. CONTRACTOR IS RESPONSIBLE TO NOTIFY LEA & BRAZE ENGINEERING AND THE GOVERNING AGENCY OF ANY CHANGES.
7. THE EROSION CONTROL MEASURES SHALL CONFORM TO THE LOCAL JURISDICTION'S STANDARDS AND THE APPROVAL OF THE LOCAL JURISDICTION'S ENGINEERING DEPARTMENT.
8. STRAW ROLLS SHALL BE PLACED AT THE TOE OF SLOPES AND ALONG THE DOWN SLOPE PERIMETER OF THE PROJECT. THEY SHALL BE PLACED AT 25 FOOT INTERVALS ON GRADED SLOPES. PLACEMENT SHALL RUN WITH THE CONTOURS AND ROLLS SHALL BE TIGHTLY END BUTTED. CONTRACTOR SHALL REFER TO MANUFACTURES SPECIFICATIONS FOR PLACEMENT AND INSTALLATION INSTRUCTIONS.

REFERENCES:

1. CALIFORNIA REGIONAL WATER QUALITY CONTROL BOARD'S FIELD MANUAL FOR EROSION AND SEDIMENTATION CONTROL
2. CALIFORNIA STORM WATER QUALITY ASSOCIATION BEST MANAGEMENT PRACTICES HANDBOOK FOR CONSTRUCTION

PERIODIC MAINTENANCE:

1. MAINTENANCE IS TO BE PERFORMED AS FOLLOWS:
   - A. DAMAGES CAUSED BY SOIL EROSION OR CONSTRUCTION SHALL BE REPAIRED AT THE END OF EACH WORKING DAY.
   - B. SWALES SHALL BE INSPECTED PERIODICALLY AND MAINTAINED AS NEEDED.
   - C. SEDIMENT TRAPS, BERMS, AND SWALES ARE TO BE INSPECTED AFTER EACH STORM AND REPAIRS MADE AS NEEDED.
   - D. SEDIMENT SHALL BE REMOVED AND SEDIMENT TRAP RESTORED TO ITS ORIGINAL DIMENSIONS WHEN SEDIMENT HAS ACCUMULATED TO A DEPTH OF 1' FOOT.
   - E. SEDIMENT REMOVED FROM TRAP SHALL BE DEPOSITED IN A SUITABLE AREA AND IN SUCH A MANNER THAT IT WILL NOT ERODE.
   - F. RILLS AND GULLIES MUST BE REPAIRED.
2. GRAVEL BAG INLET PROTECTION SHALL BE CLEANED OUT WHENEVER SEDIMENT DEPTH IS ONE HALF THE HEIGHT OF ONE GRAVEL BAG.
3. STRAW ROLLS SHALL BE PERIODICALLY CHECKED TO ASSURE PROPER FUNCTION AND CLEANED OUT WHENEVER THE SEDIMENT DEPTH REACHED HALF THE HEIGHT OF THE ROLL.
4. SILT FENCE SHALL BE PERIODICALLY CHECKED TO ASSURE PROPER FUNCTION AND CLEANED OUT WHENEVER THE SEDIMENT DEPTH REACHES ONE FOOT IN HEIGHT.
5. CONSTRUCTION ENTRANCE SHALL BE REGRAVELED AS NECESSARY FOLLOWING SILT/SOIL BUILDUP.
6. ANY OTHER EROSION CONTROL MEASURES SHOULD BE CHECKED AT REGULAR INTERVALS TO ASSURE PROPER FUNCTION

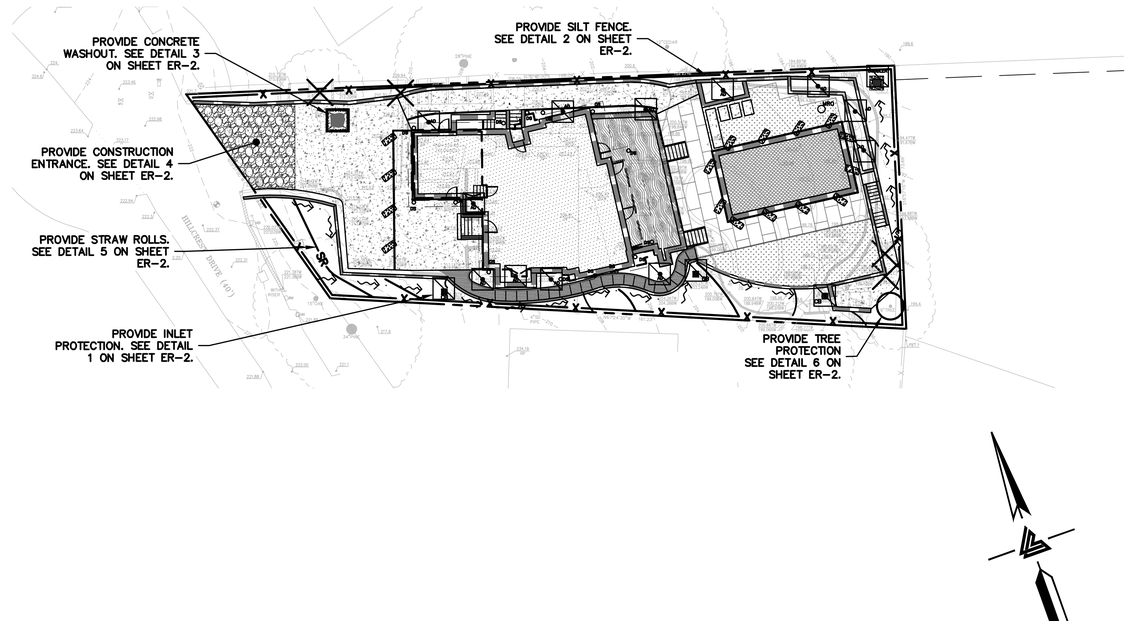

EROSION CONTROL LEGEND

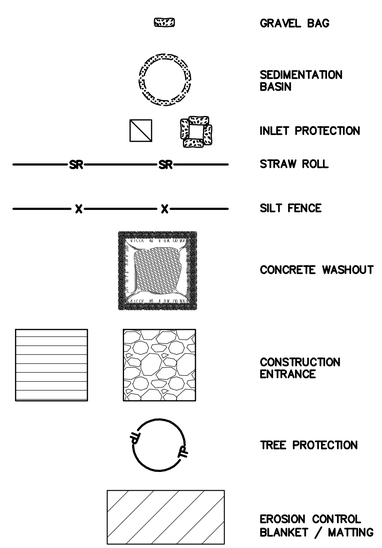

NOTE:
SEAL ALL OTHER INLETS NOT INTENDED TO ACCEPT STORM WATER AND DIRECT FLOWS TEMPORARILY TO FUNCTIONAL SEDIMENTATION BASIN INLETS. -TYP

REGISTERED PROFESSIONAL ENGINEER JAMES TOBY No. 63127 CIVIL STATE OF CALIFORNIA
ORIGINAL SIGNATURES IN BLUE INK

LEA & BRAZE ENGINEERING, INC.
CIVIL ENGINEERS | LAND SURVEYORS
MAIN OFFICE:
2495 INDUSTRIAL PKWY WEST
HAYWARD, CALIFORNIA 94545
(510) 887-4086
REGIONAL OFFICES:
ROSEVILLE
DUBLIN
SAN JOSE
WWW.LEABRAZE.COM

CONLEY RESIDENCE
962 HILLCREST DRIVE
REDWOOD CITY, CALIFORNIA
UNINCORPORATED SAN MATEO COUNTY
APN: 058-263-040

EROSION CONTROL PLAN

REVISIONS	BY
-	-
-	-
-	-
-	-
-	-

JOB NO:	2250691
DATE:	10-09-25
SCALE:	AS NOTED
DESIGN BY:	JPMR
CHECKED BY:	CP
SHEET NO:	ER-1

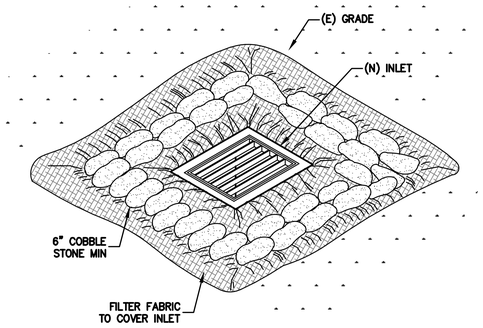

1 ER-2 **INLET PROTECTION**
NTS

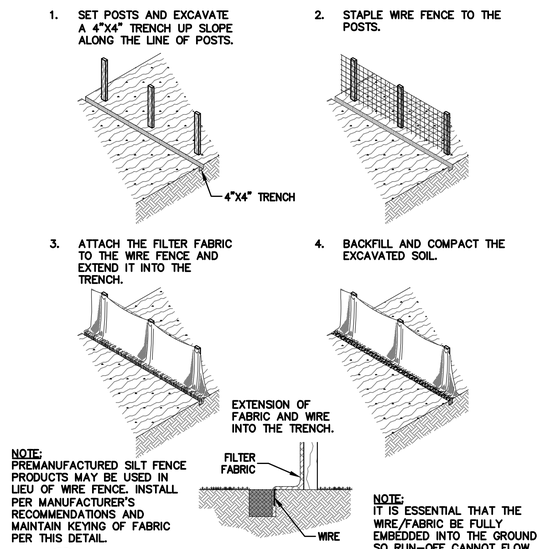

NOTE:
PREMANUFACTURED SILT FENCE PRODUCTS MAY BE USED IN LIEU OF WIRE FENCE. INSTALL PER MANUFACTURER'S RECOMMENDATIONS AND MAINTAIN KEYING OF FABRIC PER THIS DETAIL.

NOTE:
IT IS ESSENTIAL THAT THE WIRE/FABRIC BE FULLY EMBEDDED INTO THE GROUND SO RUN-OFF CANNOT FLOW FREELY UNDER FENCE.

2 ER-2 **SILT FENCE**
NTS

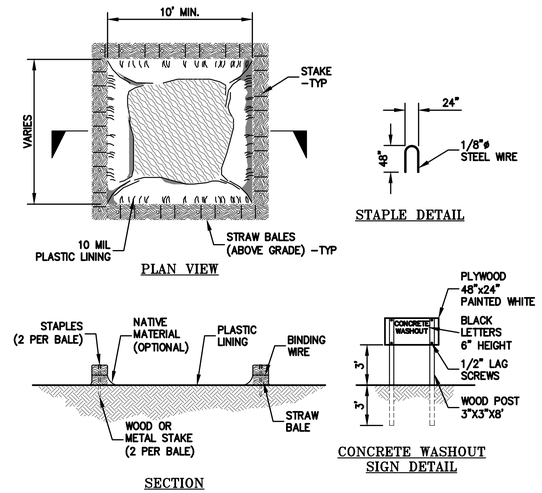

STAPLE DETAIL

CONCRETE WASHOUT SIGN DETAIL

NOTES:
ACTUAL LAYOUT DETERMINED IN FIELD.

THE CONCRETE WASHOUT SIGN SHALL BE INSTALLED WITHIN 10' OF THE TEMPORARY CONCRETE WASHOUT FACILITY.

3 ER-2 **CONCRETE WASHOUT**
NTS

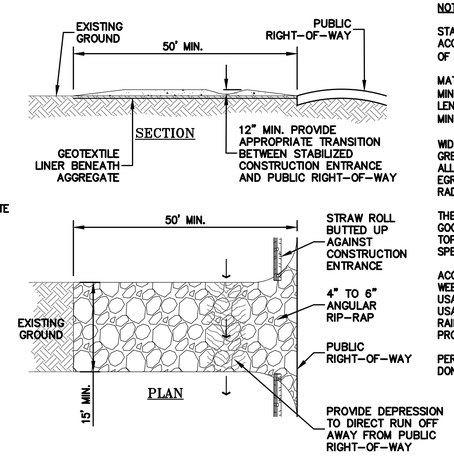

NOTES:

STABILIZED CONSTRUCTION SITE ACCESS SHALL BE CONSTRUCTED OF 4" TO 6" ANGULAR RIP-RAP.

MATERIAL SHALL BE PLACED TO A MINIMUM THICKNESS OF 12". LENGTH OF ENTRANCE SHALL BE A MINIMUM OF 50'.

WIDTH SHALL BE A MIN. OF 15' OR GREATER IF NECESSARY TO COVER ALL VEHICULAR INGRESS AND EGRESS. PROVIDE AMPLE TURNING RADII.

THE ENTRANCE SHALL BE KEPT IN GOOD CONDITION BY OCCASIONAL TOP DRESSING WITH MATERIAL AS SPECIFIED IN ABOVE NOTE.

ACCESSES SHALL BE INSPECTED WEEKLY DURING PERIODS OF HEAVY USAGE, MONTHLY DURING NORMAL USAGE, AND AFTER EACH RAINFALL, WITH MAINTENANCE PROVIDED AS NECESSARY.

PERIODIC TOP DRESSING SHALL BE DONE AS NEEDED.

4 ER-2 **CONSTRUCTION ENTRANCE**
NTS

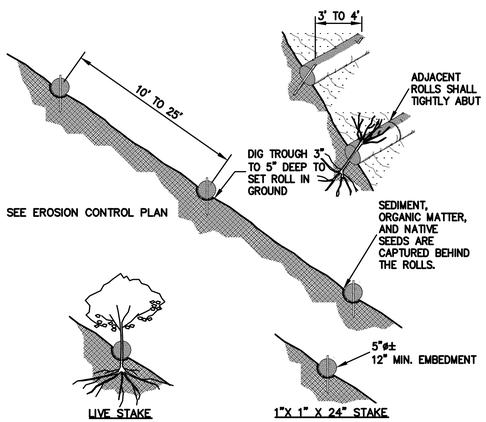

NOTE:
1. STRAW ROLL INSTALLATION REQUIRES THE PLACEMENT AND SECURE STAKING OF THE ROLL IN A TRENCH, 3" TO 5" DEEP, DUG ON CONTOUR. RUNOFF MUST NOT BE ALLOWED TO RUN UNDER OR AROUND ROLL.
2. CONTRACTOR IS RESPONSIBLE FOR REGULAR MAINTENANCE AND INSPECTION. THE SILT SHALL BE CLEANED OUT WHEN IT REACHES HALF THE HEIGHT OF THE ROLL.

5 ER-2 **STRAW ROLLS**
NTS

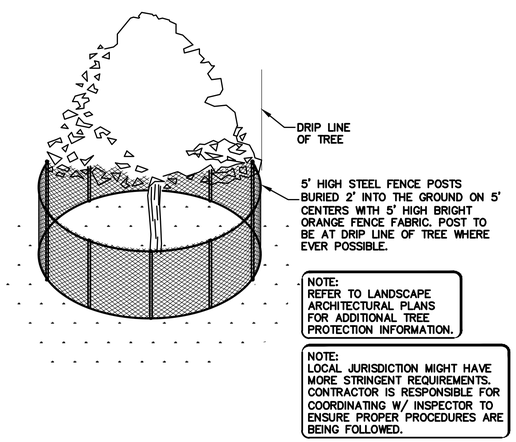

NOTE:
REFER TO LANDSCAPE ARCHITECTURAL PLANS FOR ADDITIONAL TREE PROTECTION INFORMATION.

NOTE:
LOCAL JURISDICTION MIGHT HAVE MORE STRINGENT REQUIREMENTS. CONTRACTOR IS RESPONSIBLE FOR COORDINATING W/ INSPECTOR TO ENSURE PROPER PROCEDURES ARE BEING FOLLOWED.

6 ER-2 **EXISTING TREE PROTECTION DETAIL**
NTS

REGISTERED PROFESSIONAL ENGINEER JAMES TOSIT No. 63127 CIVIL STATE OF CALIFORNIA ORIGINAL SIGNATURES IN BLUE INK

LEA & BRAZE ENGINEERING, INC.
CIVIL ENGINEERS | LAND SURVEYORS
MAIN OFFICE:
2495 INDUSTRIAL PKWY WEST
HAYWARD, CALIFORNIA 94545
(510) 887-4086
REGIONAL OFFICES:
ROSEVILLE
DUBLIN
SAN JOSE
WWW.LEABRAZE.COM

CONLEY RESIDENCE
962 HILLCREST DRIVE
REDWOOD CITY, CALIFORNIA
UNINCORPORATED SAN MATEO COUNTY
APN: 058-263-040

EROSION CONTROL DETAILS

REVISIONS	BY
–	–
–	–
–	–
–	–
–	–

JOB NO:	2250691
DATE:	10-09-25
SCALE:	AS NOTED
DESIGN BY:	JPMR
CHECKED BY:	CP
SHEET NO:	ER-2

SAN MATEO COUNTYWIDE
Water Pollution Prevention Program
Clean Water. Healthy Community.

Construction Best Management Practices (BMPs)

Construction projects are required to implement the stormwater best management practices (BMP) on this page, as they apply to your project, all year long.

Materials & Waste Management

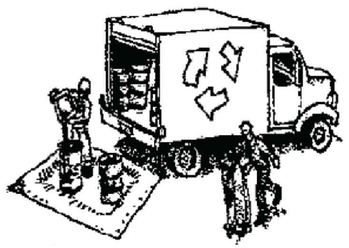

Non-Hazardous Materials

- ❑ Berm and cover stockpiles of sand, dirt or other construction material with tarps when rain is forecast or if not actively being used within 14 days.
- ❑ Use (but don't overuse) reclaimed water for dust control.

Hazardous Materials

- ❑ Label all hazardous materials and hazardous wastes (such as pesticides, paints, thinners, solvents, fuel, oil, and antifreeze) in accordance with city, county, state and federal regulations.
- ❑ Store hazardous materials and wastes in water tight containers, store in appropriate secondary containment, and cover them at the end of every work day or during wet weather or when rain is forecast.
- ❑ Follow manufacturer's application instructions for hazardous materials and be careful not to use more than necessary. Do not apply chemicals outdoors when rain is forecast within 24 hours.
- ❑ Arrange for appropriate disposal of all hazardous wastes.

Waste Management

- ❑ Cover waste disposal containers securely with tarps at the end of every work day and during wet weather.
- ❑ Check waste disposal containers frequently for leaks and to make sure they are not overfilled. Never hose down a dumpster on the construction site.
- ❑ Clean or replace portable toilets, and inspect them frequently for leaks and spills.
- ❑ Dispose of all wastes and debris properly. Recycle materials and wastes that can be recycled (such as asphalt, concrete, aggregate base materials, wood, gyp board, pipe, etc.)
- ❑ Dispose of liquid residues from paints, thinners, solvents, glues, and cleaning fluids as hazardous waste.

Construction Entrances and Perimeter

- ❑ Establish and maintain effective perimeter controls and stabilize all construction entrances and exits to sufficiently control erosion and sediment discharges from site and tracking off site.
- ❑ Sweep or vacuum any street tracking immediately and secure sediment source to prevent further tracking. Never hose down streets to clean up tracking.

Equipment Management & Spill Control

Maintenance and Parking

- ❑ Designate an area, fitted with appropriate BMPs, for vehicle and equipment parking and storage.
- ❑ Perform major maintenance, repair jobs, and vehicle and equipment washing off site.
- ❑ If refueling or vehicle maintenance must be done onsite, work in a bermed area away from storm drains and over a drip pan or drop cloths big enough to collect fluids. Recycle or dispose of fluids as hazardous waste.
- ❑ If vehicle or equipment cleaning must be done onsite, clean with water only in a bermed area that will not allow rinse water to run into gutters, streets, storm drains, or surface waters.
- ❑ Do not clean vehicle or equipment onsite using soaps, solvents, degreasers, or steam cleaning equipment.

Spill Prevention and Control

- ❑ Keep spill cleanup materials (e.g., rags, absorbents and cat litter) available at the construction site at all times.
- ❑ Inspect vehicles and equipment frequently for and repair leaks promptly. Use drip pans to catch leaks until repairs are made.
- ❑ Clean up spills or leaks immediately and dispose of cleanup materials properly.
- ❑ Do not hose down surfaces where fluids have spilled. Use dry cleanup methods (absorbent materials, cat litter, and/or rags).
- ❑ Sweep up spilled dry materials immediately. Do not try to wash them away with water, or bury them.
- ❑ Clean up spills on dirt areas by digging up and properly disposing of contaminated soil.
- ❑ Report significant spills immediately. You are required by law to report all significant releases of hazardous materials, including oil. To report a spill: 1) Dial 911 or your local emergency response number, 2) Call the Governor's Office of Emergency Services Warning Center, (800) 852-7550 (24 hours).

Earthmoving

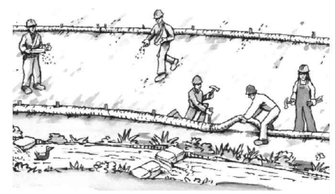

- ❑ Schedule grading and excavation work during dry weather.
- ❑ Stabilize all denuded areas, install and maintain temporary erosion controls (such as erosion control fabric or bonded fiber matrix) until vegetation is established.
- ❑ Remove existing vegetation only when absolutely necessary, and seed or plant vegetation for erosion control on slopes or where construction is not immediately planned.
- ❑ Prevent sediment from migrating offsite and protect storm drain inlets, gutters, ditches, and drainage courses by installing and maintaining appropriate BMPs, such as fiber rolls, silt fences, sediment basins, gravel bags, berms, etc.
- ❑ Keep excavated soil on site and transfer it to dump trucks on site, not in the streets.

Contaminated Soils

- ❑ If any of the following conditions are observed, test for contamination and contact the Regional Water Quality Control Board:
  - Unusual soil conditions, discoloration, or odor.
  - Abandoned underground tanks.
  - Abandoned wells
  - Buried barrels, debris, or trash.

Paving/Asphalt Work

- ❑ Avoid paving and seal coating in wet weather or when rain is forecast, to prevent materials that have not cured from contacting stormwater runoff.
- ❑ Cover storm drain inlets and manholes when applying seal coat, tack coat, slurry seal, fog seal, etc.
- ❑ Collect and recycle or appropriately dispose of excess abrasive gravel or sand. Do NOT sweep or wash it into gutters.
- ❑ Do not use water to wash down fresh asphalt concrete pavement.

Sawcutting & Asphalt/Concrete Removal

- ❑ Protect nearby storm drain inlets when saw cutting. Use filter fabric, catch basin inlet filters, or gravel bags to keep slurry out of the storm drain system.
- ❑ Shovel, abosorb, or vacuum saw-cut slurry and dispose of all waste as soon as you are finished in one location or at the end of each work day (whichever is sooner!).
- ❑ If sawcut slurry enters a catch basin, clean it up immediately.

Concrete, Grout & Mortar Application

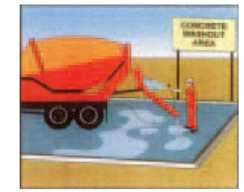

- ❑ Store concrete, grout, and mortar away from storm drains or waterways, and on pallets under cover to protect them from rain, runoff, and wind.
- ❑ Wash out concrete equipment/trucks offsite or in a designated washout area, where the water will flow into a temporary waste pit, and in a manner that will prevent leaching into the underlying soil or onto surrounding areas. Let concrete harden and dispose of as garbage.
- ❑ When washing exposed aggregate, prevent washwater from entering storm drains. Block any inlets and vacuum gutters, hose washwater onto dirt areas, or drain onto a bermed surface to be pumped and disposed of properly.

Landscaping

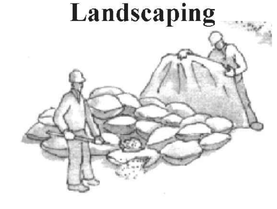

- ❑ Protect stockpiled landscaping materials from wind and rain by storing them under tarps all year-round.
- ❑ Stack bagged material on pallets and under cover.
- ❑ Discontinue application of any erodible landscape material within 2 days before a forecast rain event or during wet weather.

Painting & Paint Removal

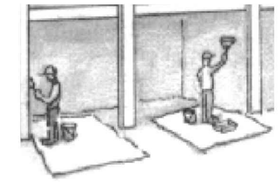

Painting Cleanup and Removal

- ❑ Never clean brushes or rinse paint containers into a street, gutter, storm drain, or stream.
- ❑ For water-based paints, paint out brushes to the extent possible, and rinse into a drain that goes to the sanitary sewer. Never pour paint down a storm drain.
- ❑ For oil-based paints, paint out brushes to the extent possible and clean with thinner or solvent in a proper container. Filter and reuse thinners and solvents. Dispose of excess liquids as hazardous waste.
- ❑ Paint chips and dust from non-hazardous dry stripping and sand blasting may be swept up or collected in plastic drop cloths and disposed of as trash.
- ❑ Chemical paint stripping residue and chips and dust from marine paints or paints containing lead, mercury, or tributyltin must be disposed of as hazardous waste. Lead based paint removal requires a state-certified contractor.

Dewatering

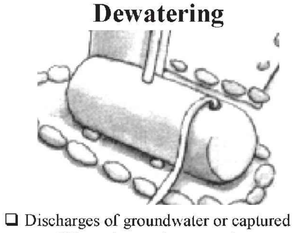

- ❑ Discharges of groundwater or captured runoff from dewatering operations must be properly managed and disposed. When possible send dewatering discharge to landscaped area or sanitary sewer. If discharging to the sanitary sewer call your local wastewater treatment plant.
- ❑ Divert run-on water from offsite away from all disturbed areas.
- ❑ When dewatering, notify and obtain approval from the local municipality before discharging water to a street gutter or storm drain. Filtration or diversion through a basin, tank, or sediment trap may be required.
- ❑ In areas of known or suspected contamination, call your local agency to determine whether the ground water must be tested. Pumped groundwater may need to be collected and hauled off-site for treatment and proper disposal.

Storm drain polluters may be liable for fines of up to $10,000 per day!

PLANT LIST

	#	QU.	SIZE	BOTANICAL NAME	COMMON NAME	HEIGHT x WIDTH	WOCOLS PLANT FACTOR
REPLACEMENT TREE *	1A	1	24" BOX or 36" BOX	TRISTANIOPIS LAURINA	SWAMP MYRTLE	25' x 15'	.5
REPLACEMENT TREE *	1B	1	24" BOX	TRISTANIOPIS LAURINA	SWAMP MYRTLE	25' x 15'	.5
	2	1	36" BOX	OLEA 'SWAN HILL' (MULTI TRUNKED)	NON FRUITING OLIVE	20' x 20'	.1
	3	25	15G	OLEA 'LITTLE OLLIE'	DWARF OLIVE	4' x 5'	.1
	4	4	5G	HYDRANGEA QUERCIFOLIA 'PEE WEE'	DWARF OAK LEAF HYDRANGEA	4' x 3'	.5
	5	16	5G	MISCANTHUS 'SIN ADAGIO'	ADAGIO EULALIA	3'-4' x 3'-4'	.5
	6	21	1G	LOMANDRA 'BREEZE'	MATT RUSH	3' x 3'	.2
	7	15	1G	SESLERIA AUTUMNALIS	AUTUMN MOOR GRASS	2' x 2'	.5
	8	19	5G	COTONEASTER 'LOWFAST'	COTONEASTER	8" x 10'	.2

AVERAGE WOCOLS FACTOR =.28 (26 x.1 +40 x.2 +37 x .5)/103 (TOTAL PLANTS)=29.1/103 =.28

I HAVE COMPLIED WITH THE CRITERIA OF THE WATER WATER CONSERVATION IN LANDSCAPE ORDINANCE AND APPLIED THEM FOR THE EFFICIENT USE OF WATER IN THE LANDSCAPE AND IRRIGATION DESIGN PLAN

A MINIMUM 3" LAYER OF MULCH SHALL BE APPLIED ON ALL EXPOSED SOIL SURFACES OF PLANTING AREAS, CREEPING OR ROOTING GROUNDCOVER, OR DIRECT SEEDING APPLICATIONS WHERE MULCH IS CONTRAINDICATED

UNLESS CONTRADICTED BY A SOILS TEST, COMPOST AT MINIMUM OF 4 CY./1000 S.F OF LANDSCAPE AREA AND INCORPORAT TO A MINIMUM OF 6" DEEP .

AT TIME OF FINAL INSPECTION, THE PERMIT APPLICANT MUST PROVIDE THE OWNER OF THE PROPERTY WITH A CERTIFICATE OF COMPLETION, CERTIFICATE OF INSTALLATION, IRRIGATION SCHEDULE AND SCHEDULE OF LANDSCAPE AND IRRIGATION MAINTENANCE

PROPOSED LANDSCAPE AREA=1749.5 S.F.
1" MIN WATER METER REQURIED FOR IRRIGATION
STATIC WATER PRESSURE 50 PSI

1 NOTE A (E)6x8 PTDF WOODEN CURB TOP FLUSH WITH ASPHALT AND GRAVEL SWALE TO REMAIN UNCHANGED. VERIFY WITH PUBLIC WORKS IN FIELD. ALL WORK WITHIN THE PUBLIC RIGHT OF WAY (P.R.O.W) SHALL BE SUBMITTED UNDER SEPARATE ENCROACHMENT PERMIT TO PUBLIC WORKS DEPARTMENT FOR APPROVAL. (SEE ARCHITECTURAL SHEET A0.5)

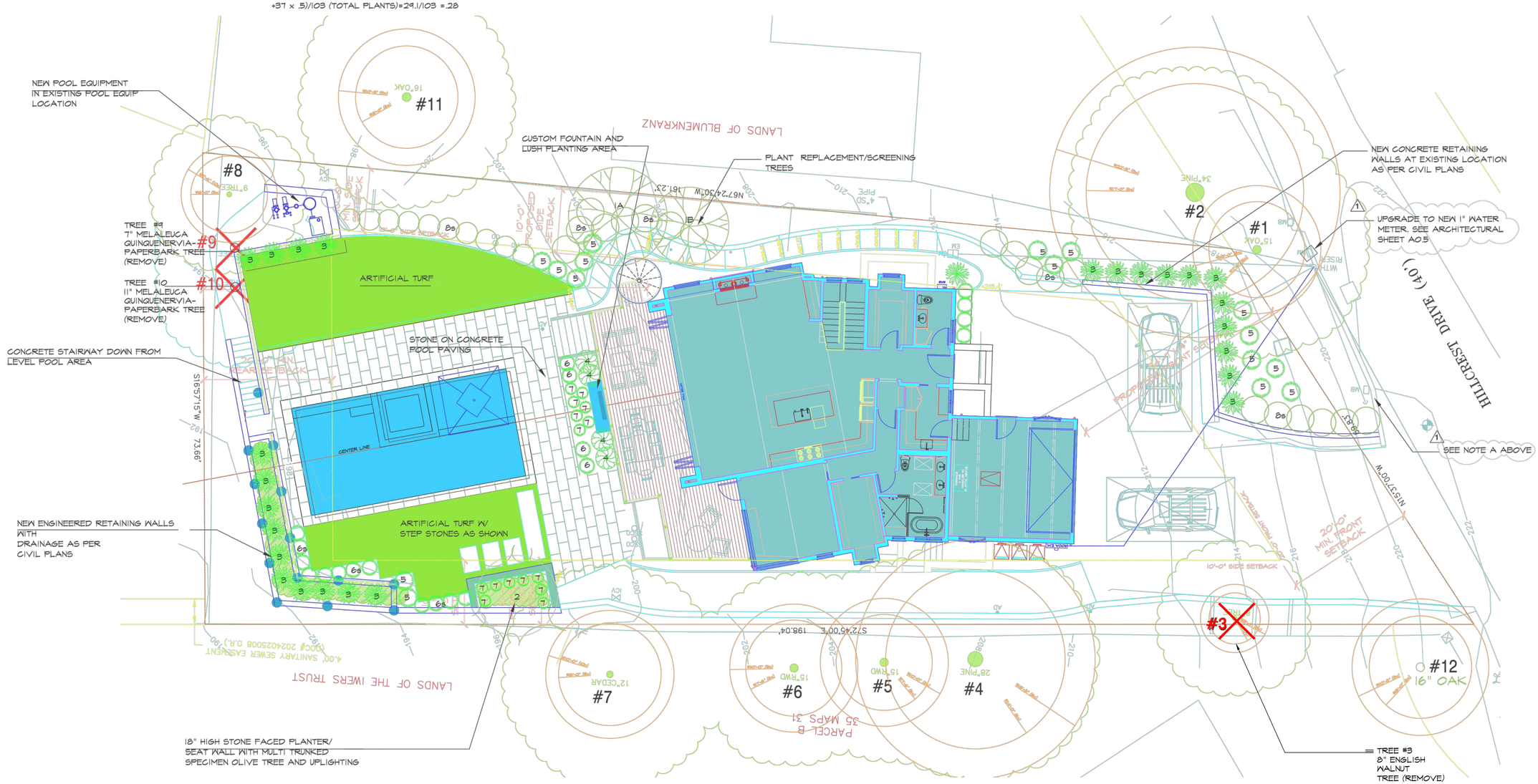

REVISIONS	BY
1 10/9/25	MY

Copyright 2025 MARA YOUNG LANDSCAPE ARCHITECT
All designs drawings and written materials appearing herein are protected and constitute original work of the landscape architect and may not be used or re-used, copied or disclosed without the written consent of the architect. Responsibility for the use of these designs, drawings and specifications are instruments of architectural service, and shall remain the property of the architect. The plans are restricted to the site for which they are prepared.

MARA YOUNG
LANDSCAPE ARCHITECT
(650) 704-9255

LANDSCAPE PLAN

ERIN AND EMILY CONLEY
962 HILLCREST DRIVE
REDWOOD CITY, CA 94062

DRAWN	MY
CHECKED	MY
DATE	7/24/25
SCALE	1/8"=1'-0"
JOB NO.	xxx
SHEET	L-1
OF	SHEETS

REGISTERED LANDSCAPE ARCHITECT
MARA YOUNG NO. 5754
EXP 11/30/25
SIGNATURE
10/9/25
DATE
STATE OF CALIFORNIA

IRRIGATION EQUIPMENT LEGEND

VALVE LEGEND

VALVE #	SYSTEM TYPE	FLOW RATE GPM OR GPH	APPLICATION RATE INCHES PER HOUR	OPERATING PRESSURE
1	DRIP TO LOW-MOD WATER USE @ FRONT 100 L.F.)	1.02 per 100 LF 1.02 GPH	.64	30-40
2	DRIP TO LOW WATER USE @FRONT 100 L.F.)	1.02 per 100 LF 1.02 GPH	.64	30-40
3	DRIP TO LOW WATER USE @ SIDE 100 L.F.)	1.02 per 100 LF 1.02 GPH	.64	30-40
4	DRIP TO MODERAT WATER USE @ DECK 50 L.F.)	1.02 per 100 LF 1.02 GPH	.64	30-40
5	DRIP TO LOW-MOD WATER USE @ REAR 100 L.F.)	1.02 per 100 LF 1.02 GPH	.64	30-40
6	DRIP TO LOW WATER USE @ REAR 100 L.F.)	1.02 per 100 LF 1.02 GPH	.64	30-40

SYMBOL	DESCRIPTION	NOTES
C	CONTROLLER: HUNTER PRO-C CONTROLLER 12 STATION WITH ADDED MODULES FOR ULTIMATE WATER EFFICIENCY	INSTALL IN LOCTION VERIFIED BY OWNER
	FEBCO 1" ATMOSPERIC BACKFLOW DEVICE	
	NIBCO BRONZE 1" GATE VALVE	
	CONTROL VALVE HUNTER OR WEATHERMATIC 1" USE PRESSURE REDUCER FOR DRIP IRRIGATION	INSTALL IN 10" CARSON VALVE BOX
	HOSE BIB/QUICK COUPLER	
	MAIN LINE 1" SCHEDULE 40 PVC	18" MINIMUM DEPTH USE PRIMER AND GLUE
	LATERAL LINE SCH. 40 PVC	1" OR AS SHOWN 12" MINIMUM DEPTH
	NETAFIM TECHLINE 12" SPACING DRIP IRRIGATION SYSTEM	INSTALL AS PER MANUFACTURERS RECOMMENDATIONS
	SOLID DRIP LINE IN PVC SLEEVE UNDER PAVING	INSTALL AS PER MANUFACTURERS RECOMMENDATIONS

IRRIGATION SYSTEM PROGRAMMED TO WATER BETWEEN THE HOURS OF 8:00 PM AND 10:00 AM.

IRRIGATION SYSTEM AND COMPONENTS DESIGNED IN SUCH AS WAY AS TO CONSERVE WATER AND PREVENT OVERSPRAY AND RUNOFF

AUTOMATIC WEATHER BASED OR SOIL MOISTURE BASED IRRIGATION CONTROLLERS SHALL BE INSTALLED ON THE IRRIGATION SYSTEM

PRESSURE REGULATING DEVICES SHALL BE INSTALLED ON THE IRRIGATION SYSTEM TO ENSURE DYNAMIC PRESSURE OF THE SYSTEM IS WITHIN THE MANUFACTURERS RECOMMENDED PRESSURE RANGE.

MANUAL SHUT OFF VALVES SHALL BE INSTALLED AS CLOSE AS POSSIBLE TO THE POINT OF CONNECTION OF THE WATER SUPPLY

MANUAL SHUT OFF VALVES SHALL BE INSTALLED AS CLOSE AS POSSIBLE TO THE POINT OF CONNECTION OF THE WATER SUPPLY

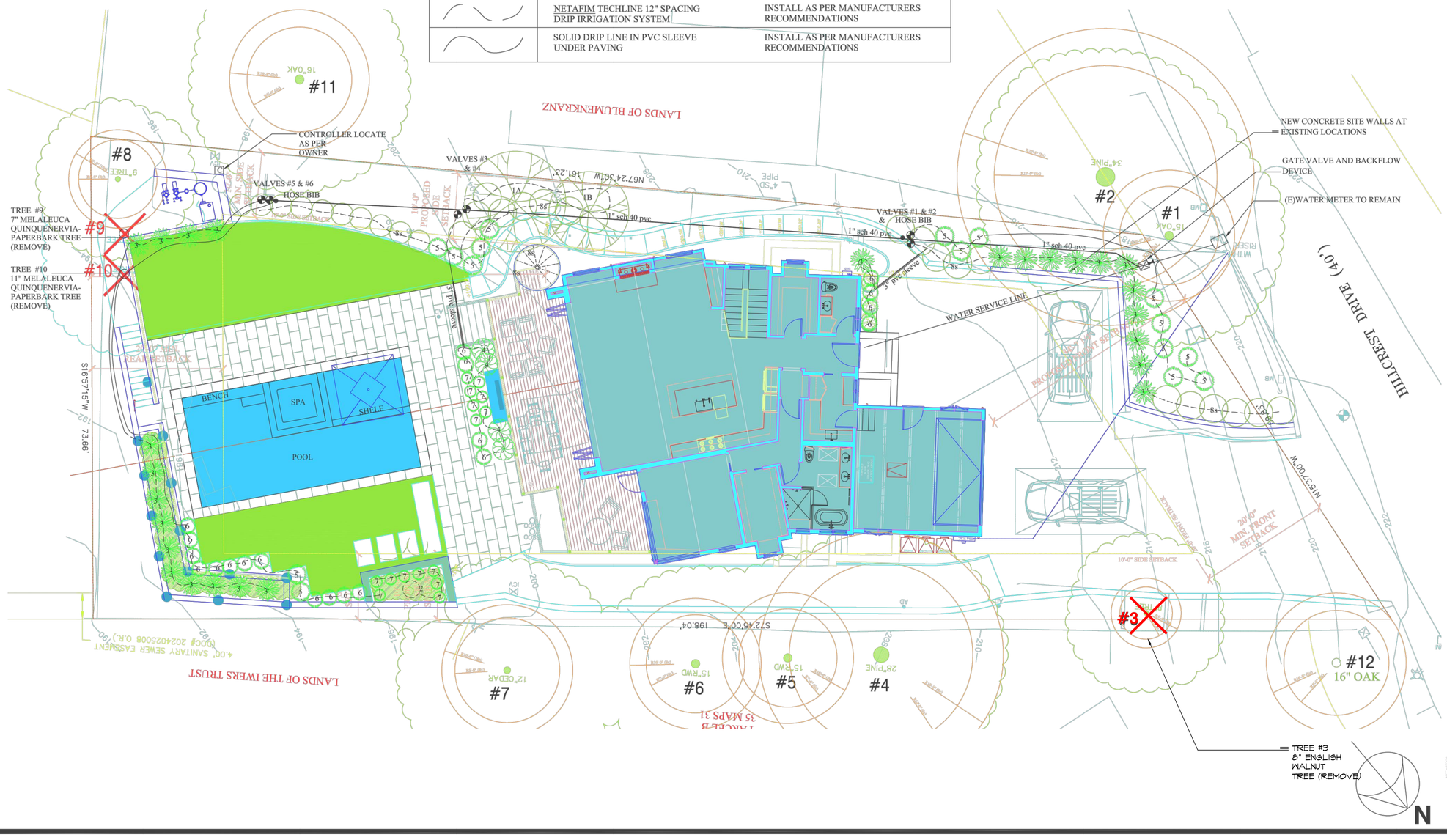

REVISIONS	BY

Copyright 2020 MARA YOUNG LANDSCAPE ARCHITECT

All designs drawings, and written materials appearing herein are property of the landscape architect and may not be used, reproduced, or disclosed without the written consent of the landscape architect. Ownership of all designs and drawings and specifications are instruments of architectural service, and shall remain the property of the landscape architect. They are restricted to the site for which they are prepared.

MARA YOUNG
LANDSCAPE ARCHITECT
(650) 704-9275

IRRIGATION PLAN

ERIN AND EMILY CONLEY
962 HILLCREST DRIVE
REDWOOD CITY, CA 94062

DRAWN	MY
CHECKED	MY
DATE	7/24/25
SCALE	1/8"=1'-0"
JOB NO.	xxx
SHEET	L-2
OF	SHEETS

PRESCRIPTIVE APPROACH
(For 500 - 2,500 sq ft of new landscape area or aggregate new and rehabilitated landscape area OR 2,500 sq ft of rehabilitated landscape area)

Plant Material (Title 23, Chapter 2.7, Appendix D (b) (3))

- ☑ For residential areas, 75% of landscape, excluding edibles and areas using recycled water, shall consist of plants that average a WUCOLS plant factor of 0.3. WUCOLS plants database can be found online at: http://ucanr.edu/sites/WUCOLS/
- ☐ For non-residential areas, 100% of the plants, excluding edibles and areas using recycled water, shall consist of plants that average a WUCOLS plant factor of 0.3.
- ☑ Pools and water features are included in landscape square footage for one-family and two-family dwellings
- ☑ The following WUCOLS plant factors shall be used in calculating the average WUCOLS plant factor:
  - ☑ Very low = .1
  - ☑ Low = .2
  - ☑ Moderate = .5
  - ☑ High = .85
- ☑ The following formula shall be used to calculate the average WUCOLS factor: [(# of Very low water use plants x 0.1) + (# of Low water use plants x 0.2) + (# of Moderate water use plants x 0.5) + (# of High water use plants x 0.85)] / Total number of plants = WUCOLS average for project
- ☑ Include a landscape and irrigation design plan.

- ☑ Include square footages of new landscaping and rehabilitated landscaping.
- ☑ Include a plant list on the landscape plan that identifies all plant material by botanical names and common names, WUCOLS factor, Sunset and/or USDA Hardiness zone, and the total quantity of each plant.
  - ☑ The average spread of each tree shall be noted on the plant list.
- ☑ Add note to plans: "A minimum 3-inch layer of mulch shall be applied on all exposed soil surfaces of planting areas except turf areas, creeping or rooting groundcovers, or direct seeding applications where mulch is contraindicated."

Turf (Title 23, Chapter 2.7, Appendix D (b) (4)) NO REAL GRASS

- ☑ Turf is considered living plant material. MWELO regulations do not apply to artificial turf.
- ☑ Note areas of existing turf and new turf and the square footage of each.
- ☑ Add note to plans: "Turf shall not exceed 25% of the landscape area in residential areas."
- ☑ Add note to plans: "No turf permitted in non-residential areas."
- ☑ Add note to plans: "Turf not permitted on slopes greater than 25%."
- ☑ Add note to plans: "Turf is prohibited in parkways less than 10 feet wide."

Irrigation (Title 23, Chapter 2.7, Appendix D (b) (5))

- ☑ The irrigation plans, at a minimum, shall contain the following:
  - ☑ Location and size of water meters for landscape (if a separate water meter is installed)
  - ☑ Location, type, and size of all components of the irrigation system, including, at a minimum, main and lateral lines
- ☑ Add note to plans: "Automatic weather-based or soil-moisture based irrigation controllers shall be installed on the irrigation system."
- ☑ Add note to plans: "Pressure regulators shall be installed on the irrigation system to ensure dynamic pressure of the system is within the manufacturer's recommended pressure range."

- ☑ Add note to plans: "Manual-shut-off valves shall be installed as close as possible to the point of connection of the water supply."
- ☑ Add note to plans: "Areas less than 10-feet in width in any direction shall be irrigated with subsurface irrigation or other means that produces no runoff or overspray."
- ☑ Add note to plans: "For non-residential projects with landscape areas of 1,000 sq.ft. or more, private sub-meter(s) to measure landscape water use shall be installed."
- ☑ Add note to plans: "At the time of final inspection, the permit applicant must provide the owner of the property with a certificate of completion, certificate of installation, irrigation schedule of landscape and irrigation maintenance."
- ☑ Add note to plans: "Unless contradicted by a soils test, compost at a rate of a minimum of four cubic yards per 1,000 sq. ft. of permeable area shall be incorporated to a depth of six inches into the soil."

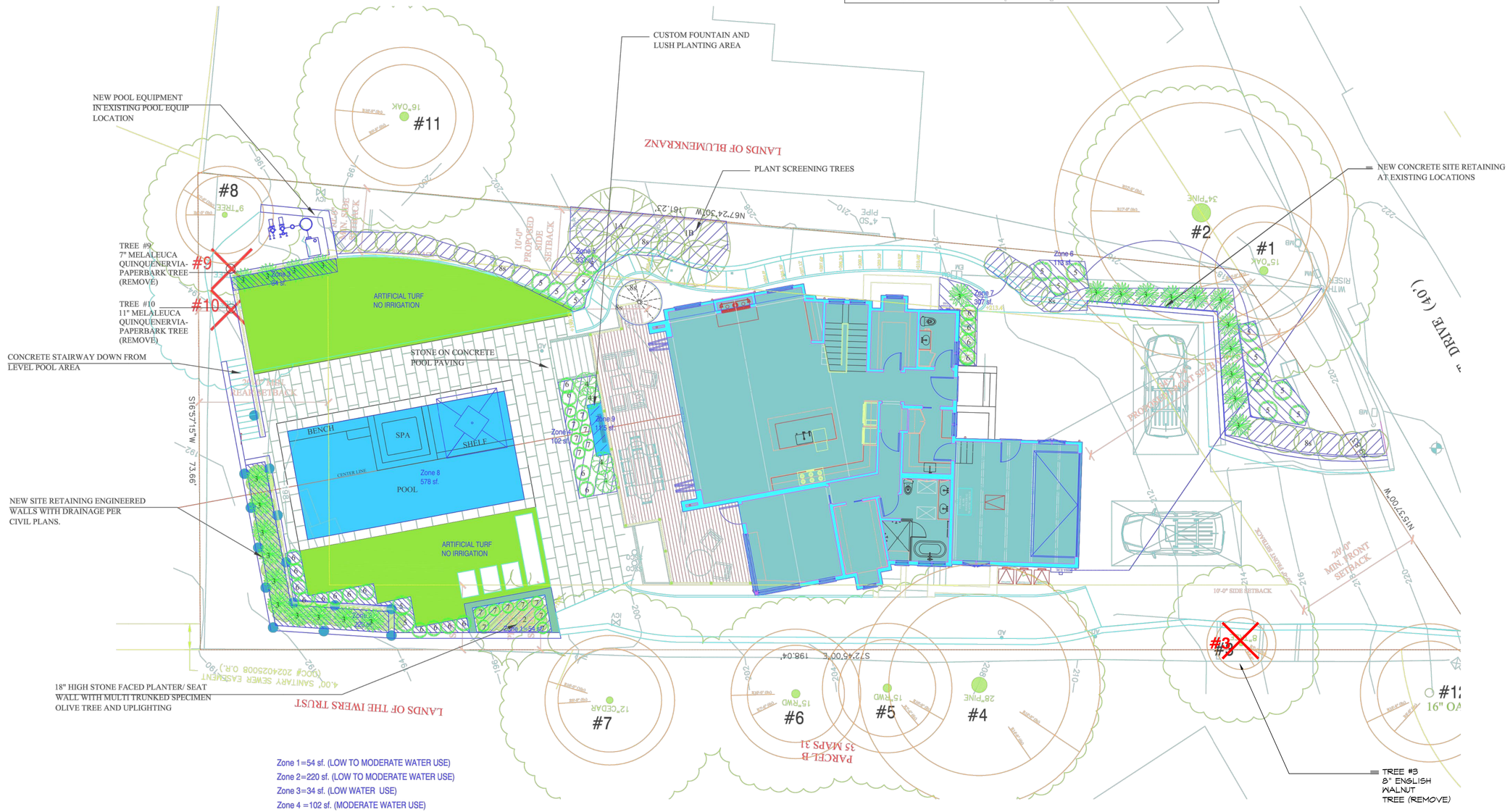

Zone 1=54 sf. (LOW TO MODERATE WATER USE)
Zone 2=220 sf. (LOW TO MODERATE WATER USE)
Zone 3=34 sf. (LOW WATER USE)
Zone 4 =102 sf. (MODERATE WATER USE)
Zone 5 =330 sf. (LOW TO MODERATE WATER USE)
Zone 6=113 sf.(MODERATE WATER USE)
Zone 7=307 sf.(LOW WATER USE)
Zone 8=578 sf.(SWIMMING POOL WITH COVER)
Zone 9=SLA 11.5 sf.(RECIRCULATION FOUNTAIN)
TOTAL LANDSCAPE AREA=1749.5 S.F.

REGISTERED LANDSCAPE ARCHITECT MARA YOUNG NO. 5754 EXP 11/30/25 SIGNATURE 7/24/25 DATE STATE OF CALIFORNIA

REVISIONS	BY

Copyright 2025 MARA YOUNG LANDSCAPE ARCHITECT
All designs drawings and written materials appearing herein are the property of and constitute original work of MARA YOUNG LANDSCAPE ARCHITECT and may not be reused, re-used, copied or disclosed without the written consent of the author. Designs, drawings and specifications are instruments of architectural service, and shall remain the property of the author. Designs are restricted to the site for which they are prepared.

MARA YOUNG LANDSCAPE ARCHITECT (650) 704.9255

HYDROZONE DIAGRAM

ERIN AND EMILY CONLEY
962 HILLCREST DRIVE
REDWOOD CITY, CA 94062

DRAWN	MY
CHECKED	MY
DATE	7/24/25
SCALE	1/8"=1'-0"
JOB NO.	xxx
SHEET	L-3
OF	SHEETS

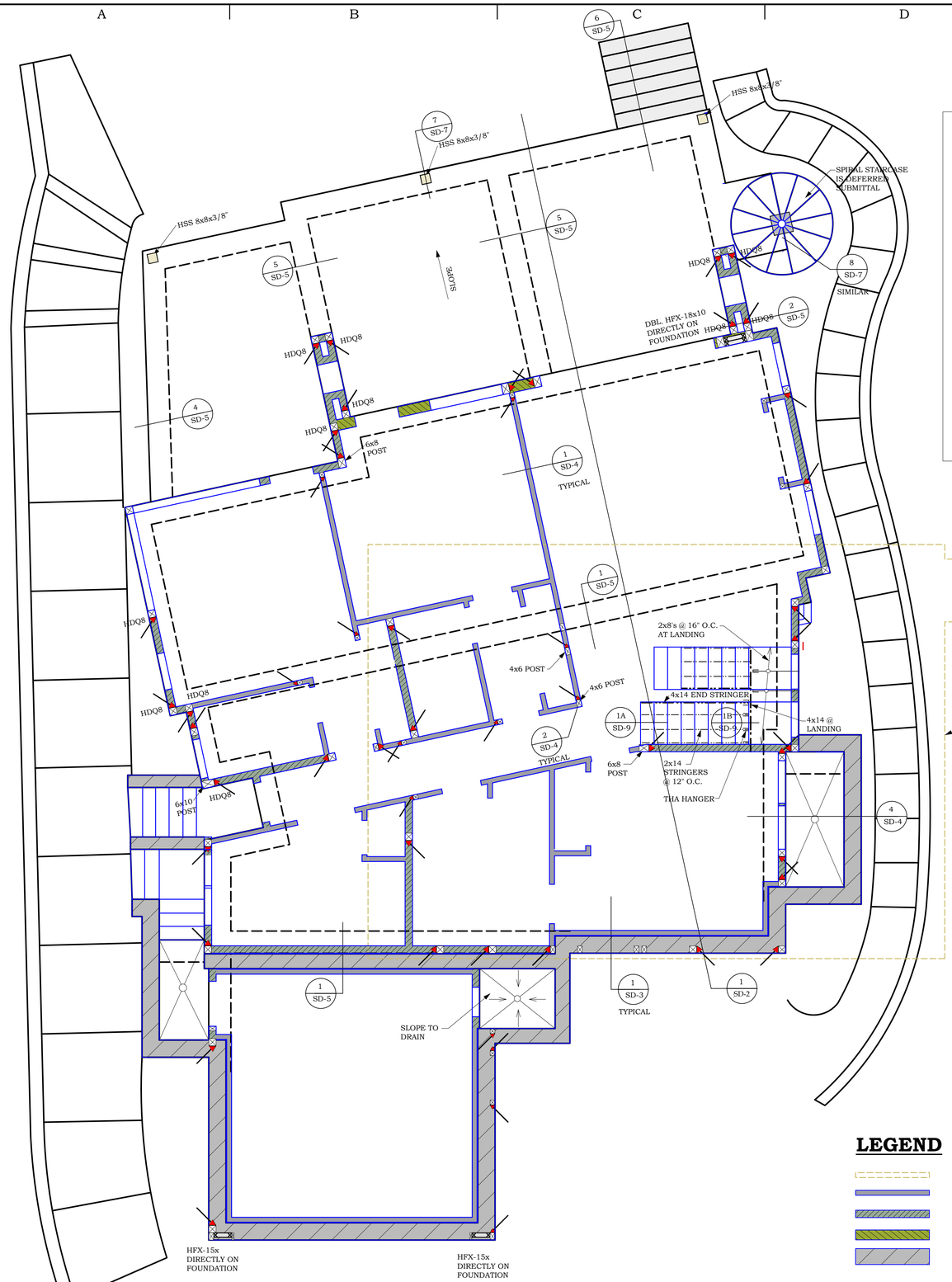

LATERAL DESIGN INFO

BASIC WIND SPEED:	95 MILES PER HOUR (M/HR)
WIND IMPORTANCE FACTOR:	1
WIND EXPOSURE:	"B"
DESIGN WIND LOAD:	16.0 PSF
SEISMIC IMPORTANCE FACTOR:	1
MAPPED SPECTRAL RESPONSE ACCELERATIONS, S_S& S_1:	S_S=2.031, S_1= 0.840
SITE CLASS:	"C"
SPECTRAL RESPONSE COEFFICIENTS, SD_S & SD_1 :	SD_S =1.625, SD_1 = 0.784
SEISMIC DESIGN CATEGORY:	"D"
1- BASIC SEISMIC-FORCE-RESISTING SYSTEM (S):	LIGHT FRAMED WALLS SHEATHE WITH WOOD STRUCTURAL PANEL RATED FOR SHEAR RESISTANCE.
SEISMIC RESPONSE COEFFICIENTS (S):	C = 0.232 W
RESPONSE MODIFICATION FACTOR (S):	R = 6.5
2- BASIC SEISMIC-FORCE-RESISTING SYSTEM:	STEEL ORDINARY CANTILEVER COLUMN SYSTEMS
SEISMIC RESPONSE COEFFICIENTS:	C = 0.929 W
RESPONSE MODIFICATION FACTOR:	R = 1.25
ANALYSIS PROCEDURE USED:	EQUIVALENT LATERAL FORCE PROCEDURE

GRAVITY DESIGN INFO

ROOF DL:	16 PSF.
ROOF LL:	20 PSF.
FLOOR DL:	10 PSF.
FLOOR LL:	40 PSF.
DECK DL:	24 PSF.
DECK LL :	60 PSF.

SOILS LOAD BEARING VALUES:

SOIL PROFILE TYPE:	Sc
1- PIERS:	16" DIAM.
PIERS SKIN FRICTION:	400 LBS. PER SQ. FT.
PIERS FLUID PRESSURE:	350 LBS. PER CUBIC FT.
PIERS UPLIFT SKIN FRICTION:	320 LBS. PER SQ. FT.
2- FOOTINGS:	
SHALLOW FOOTING BEARING PRESSURE:	2,500 LBS.
COEFFICIENT OF FRICTION:	0.45
FOOTINGS FLUID PRESSURE:	350 LBS. PER CUBIC FT.

RETAINING WALLS:

FLUID PRESSURE:	0.45 LBS. PER CUBIC FT., FOR LEVEL WALL BACKFILL
ADDITIONAL	1.00 LBS. PER CUBIC FT. FOR EVERY 1.25 DEGREE SLOPING BACKFILL WITH BACKFILL UP TO 2:1
DESIGN PRESSURE:	INCREASE FOR WALLS THAT ARE NOT FREE TO ROTATE ADD 8H AS INCREASED PRESSURE
SEISMIC SURCHARGE:	$21H^2$ LINE LOAD APPLIED BEHIND AT 1/3 H ABOVE BASE OF WALL

FOUNDATION NOTES:

Contractor shall verify all conditions shown on all drawings and immediately notify the engineer of any discrepancies.
Contractor shall meet with engineer at least 2 weeks prior to start of construction or demolition to review the project.

F1A) ⊠ Denotes: HDU5 at 4x posts typical u.n.o.
Align holdowns with walls above. Do not scale location from this plan.

F1B) At pony walls, if applicable to this project may use:
MST48 thru floor & HDU5 @ foundation
MST60 thru floor & HDQ8 @ foundation
See detail 3/SD1.

F2A) *HOLDOWNS AT NEW FOUNDATION: See detail 1/SD1.*
F2B) HOLDOWNS AT EXISTING FOUNDATION:
Use **Simpson SET-3G** system. See detail 1/SD-1.
Special inspection is required.Contact engineer.
F3A) ANCHOR BOLTS AT NEW FOUNDATION:
1. 5/8 " diameter ASTM A307 x 12" anchor bolts with BP5/8-3 & nut
2. A.B. shall be spaced at 48" o.c. maximum typ. u.n.o.
3. See note F4 for tighter spacing
4. 3x sill plates typical at all new foundation u.n.o.
5. Provide minimum (2) A.B. between holdowns

F3B) NEW ANCHOR BOLTS AT EXISTING FOUNDATION
1. 5/8" all thread x 7" embedment into ex. fdn. with BP 5/8-3 & nut
2. Or may use Simpson URFP, with the same spacing as A.B.

F4) Anchor bolt spacing at shearwalls:
48" on center at type A walls
32" on center at type B walls
16" on center at type C walls
12" on center at type E walls

F5) Connectors for pressure treated lumber (nails, hangers, anchor bolts, plate washers, etc.) shall be hot dipped galvanized or stainless steel per C.B.C. 2304.9.5.
F6) All site and foundation work shall be done in accordance with 2022 C.B.C. chapter 18 and soil report by Romig Engineers. Project number 6838-1 dated March 20, 2025.
F7) All work shall conform with 2022 C.B.C. as well as applicable local codes in effect at the time of construction, including 2024 I.B.C.
F8) All framing shall conform with 2022 C.B.C., chapter 23.
F9) All nailing shall conform with 2022 C.B.C. table 2304.10.2
F10) During the placing of concrete, mushroomed concrete spillage at the sides of foundation should be trimmed to the design size of the fdn. respectively. Also, bottom of footings shall be clean of spoils.

LEGEND

- DENOTES OUTLINE OF EX. WALLS REMOVED
- DENOTES NEW 2x4 WALLS
- DENOTES NEW 2x6 WALLS
- DENOTES NEW 2x8 WALLS
- DENOTES 14" RETAININGT WALL

SCALE: 1/4"=1'-0"

CONTRACTOR MUST CONTACT ENGINEER:
3 BUSINESS DAY EMAILED NOTICE IS REQUIRED:

PRIOR TO ORDERING ANY MATERIAL THE ENGINEER & ARCHITECT SHALL MEET TO CONFIRM OR MODIFY PROPOSED STRUCTURAL DESIGN.

STRUCTURAL OBSERVATIONS BY ENGINEER:
3 BUSINESS DAY EMAILED NOTICE IS REQUIRED TO SCHEDULE SITE VISITS - ENGINEER TO OBSERVE:

1- FOUNDATION:
A) REBARS FOR ANY POUR AT 10%
B) REBARS FOR ANY POUR AT 100%
2- FRAMING:
A) ANY FLOOR SURFACE PRIOR TO PLYWOOD
B) ANY WALL SURFACE PRIOR TO PLYWOOD
C) ANY ROOF SURFACE PRIOR TO PLYWOOD
3- SHEARWALLS, HOLDOWNS, & POSITIVE CONNECTORS.
4- FINAL VISIT AFTER PLUMBING & ELECTRICAL

Ali Adib, P.E.
ATA ENGINEERING
1202 Main Street, Redwood City, CA 94063
Tel. 650.363.2338, Fax 650.363.2031, email: ata@ataeng.net

FOUNDATION PLAN

REGISTERED PROFESSIONAL ENGINEER ALI ADIB NO. CE49976 Exp. 6-30-27 CIVIL STATE OF CALIFORNIA

PLANS ARE FAVORABLY REVIEWED FOR COMPLIANCE WITH STRUCTURAL CALCULATIONS ONLY

REMODEL/ADDITION AT:
CONLEY RESIDENCE
962 HILLCREST DRIVE
REDWOOD CITY, CA 94062

DATE: 2025-07-15

S-1

OF SHEETS

PRELIMINARY NOT VALID FOR CONSTRUCTION FOR BIDDING PURPOSES ONLY

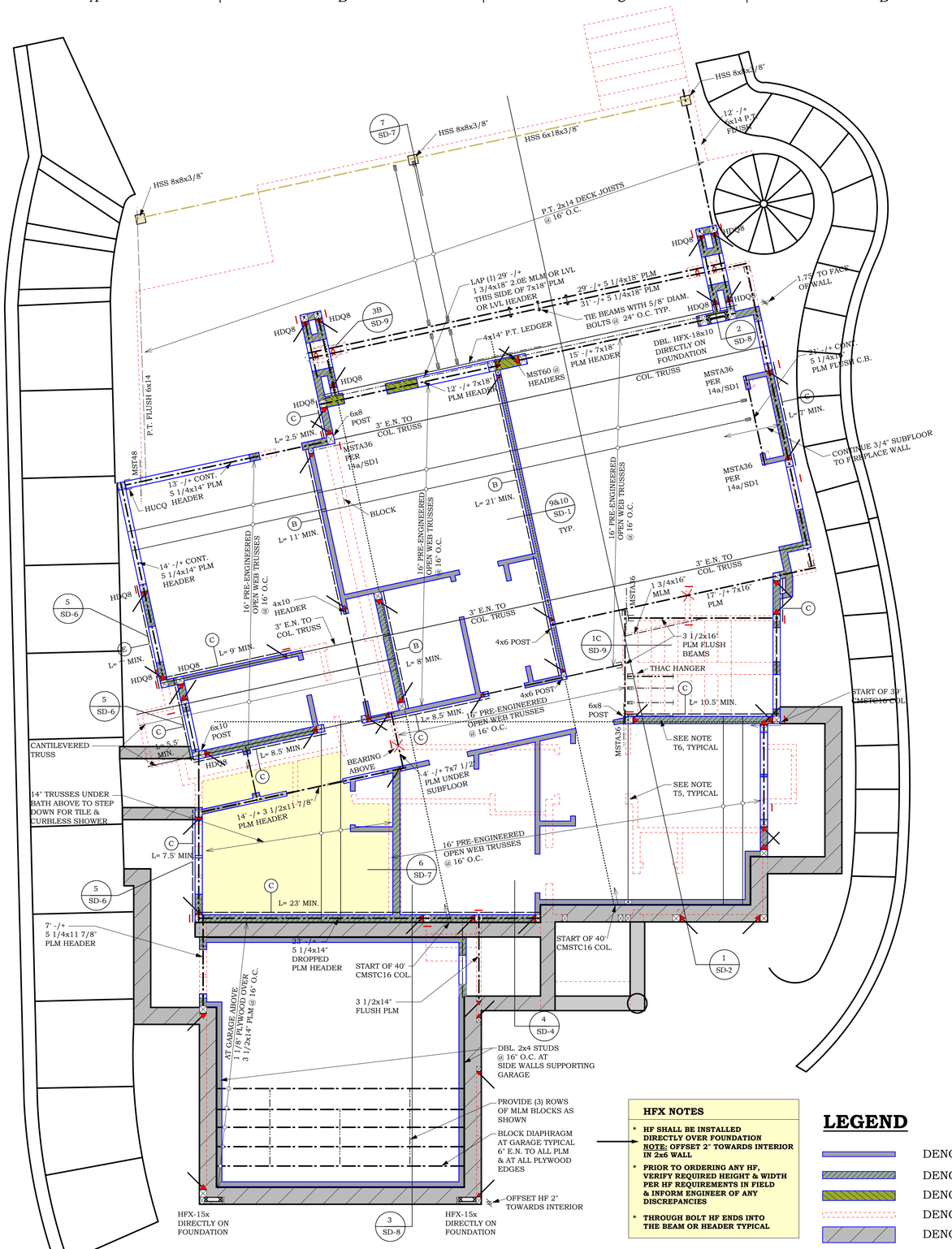

TRUSS NOTES:

T1- MAXIMUM TOTAL LOAD DEFLECTION SHALL BE 0.5"

T2- ALLOW AS MUCH OPENING IN TRUSSES FOR MECHANICAL ROWS

T3- COL DENOTES 4,000 LB. COLLECTOR OPENINGS TO MATCH TYPICAL TRUSS MAY USE (2) 2,000 LB COLLECTOR TRUSS

T4- 3" EDGE NAILING TO ALL COL. TRUSSES

T5- ALIGN ONE TRUSS WITH ALL WALLS ABOVE

T6- PROVIDE 1,000 LB. CAPACITY BLOCKING OVER ALL PERPENDICULAR TRUSSES

CONTRACTOR MUST CONTACT ENGINEER:
3 BUSINESS DAY EMAILED NOTICE IS REQUIRED:

PRIOR TO ORDERING ANY MATERIAL THE ENGINEER & ARCHITECT SHALL MEET TO CONFIRM OR MODIFY PROPOSED STRUCTURAL DESIGN.

STRUCTURAL OBSERVATIONS BY ENGINEER:
3 BUSINESS DAY EMAILED NOTICE IS REQUIRED TO SCHEDULE SITE VISITS - ENGINEER TO OBSERVE:

1- FOUNDATION:
A) REBARS FOR ANY POUR AT 10%
B) REBARS FOR ANY POUR AT 100%
2- FRAMING:
A) ANY FLOOR SURFACE PRIOR TO PLYWOOD
B) ANY WALL SURFACE PRIOR TO PLYWOOD
C) ANY ROOF SURFACE PRIOR TO PLYWOOD
3- SHEARWALLS, HOLDOWNS, & POSITIVE CONNECTORS.
4- FINAL VISIT AFTER PLUMBING & ELECTRICAL

HFX NOTES

- **HF SHALL BE INSTALLED DIRECTLY OVER FOUNDATION NOTE: OFFSET 2" TOWARDS INTERIOR IN 2x6 WALL**
- **PRIOR TO ORDERING ANY HF, VERIFY REQUIRED HEIGHT & WIDTH PER HF REQUIREMENTS IN FIELD & INFORM ENGINEER OF ANY DISCREPANCIES**
- **THROUGH BOLT HF ENDS INTO THE BEAM OR HEADER TYPICAL**

LEGEND

- DENOTES NEW 2x4 WALLS
- DENOTES NEW 2x6 WALLS
- DENOTES NEW 8.75" WIDE WALLS
- DENOTES WALLS ABOVE
- DENOTES 14" RETAININGT WALL

SHEARWALL NOTES:

S1a) Denotes holdowns to tie base of walls to foundation,
1. HDU5 at 4x posts typical u.n.o. See foundation plan for size.
2. See details 1-4 sheet SD1.

S1b) Denotes trace of holdowns straps to tie base of walls at two story conditions,
1. MST48 at 4x4 posts typical u.n.o.
2. See details 3 & 4 sheet SD1.

NOTE: HOLDOWNS ARE TO BE INSTALLED AT BOTTOM OF WALLS.

S2) Indicates shear wall plywood & nailing schedule. Type "A" on all new exterior walls, typical u.n.o. See sheet SD-1 for nailing schedule.

S3) 3X Plates required:
At type "B", "C" and "E" shearwalls, 3x nominal studs and plates are to be used at edge nailing and where panels adjoin. Top plates may be (2) 2x. See sheet SD1 details and notes and other detail sheets for shearwall detail.
S4) Run shear wall plywood continuously at wall "T" intersections.
S5) Provide shear transfer to roof & through floor framing:
1. Extend plywood to roof and provide shear transfer hardware
2. See sheet SD1 details and notes and other shear transfer details.
S6) Use *(1) MSTA36* straps per top plate:
1. at existing to new top plates
2. both or one top plate is cut where top plate detail 13/SD1 is not satisfied
3. top plates are at different elevations, see detail 14b/SD1
4. Gable walls: (1) MSTA36 over ridge line
S7) Engineer to review shearwalls and holdowns.

FLOOR FRAMING NOTES:

FF1) Contractor shall verify all conditions shown on all drawings and immediately notify the engineer of any discrepancies.
Contractor shall meet with engineer at least 2 weeks prior to start of construction or demolition to review the project.

FF2) ***EXTERIOR WALLS:*** *(typical unless noted otherwise)*
studs to 10' max 2x4 at 16" o.c.
studs to 16' max 2x6 at 16" o.c.
1. Gable end walls shall be balloon framed with minimum (2) 2x king studs. Note 4x posts are required at holdowns.
2. All new plumbing walls shall be 2x6 at 16" o.c.
FF3) ***HEADERS:*** *(typical unless noted otherwise)*
1. Headers are DFL, No. 1,
2. Engineered lumber such as PLM is preferred to minimize shrinkage
3. Double jack studs min.at spans over 5'
(4x posts are required at shearwall ends to tie holdowns)
4. at spans over 5', headers to tie to jack posts with A35's or LTP4's
A) 2X4 WALLS;
Exterior and Interior bearing walls: 4x8 to 4' span, 4x10 to 10' span, 4x12 to 14' span
Interior non-bearing walls, 4x8 to 6' span, 4x6 to 3' span
B) 2X6 WALLS;
Exterior and Interior bearing walls: 6x8 to 4' span, 6x10 to 11' span, 6x12 to 15' span
Interior non-bearing walls, 6x8 to 7' span, 6x6 to 4' span

FF4) ***HANGERS*** *(typical unless noted otherwise)*:
A) Floor Joists: TJIs : All top hangers
B) Microlams: HUS
C) Double Microlams: HUS
D) Flush PLM: **HGUS** typical u.n.o, see plans for where **EGQ** hangers are required
E) All Beams which are tied to holdown straps or holdowns of walls above them shall be strapped down horizontally and vercticallly. See details.

FF5) ***POSTS*** *(typical unless noted otherwise)*:
1. Posts shall not break through double top plates.
Spilce post at top plates, clip posts to plates with (2) A35's
2. Posts can be solid members or multiple studs nailed with 16d at 12" o.c per lap, (solid posts at HD's)
3. Posts to match thickness of walls and width of beams they are supposting; for example:4x6 at 2x4 wall supporitng 6x beam, etc.
4. Posts supporitng beams, shall have minimum (2) A35's to top plates
5. Provide beams, solid blkg or posts to transfer loads to fdn or framing below
FF6) All floor joists to be 16" open web trusses typical U.N.O.
FF7) MLM denotes (1) 1 3/4 x 14" Microllam LVL, 1.9E Min.
FF8) DBL MLM denotes (2) 1 3/4 x 14" Microllam LVL, lapped
1. Nail lapped MLM with (2) rows of 16d's at 12" o.c. staggered
FF9) PLM denotes Parallam PSL, 2.0E
depth to match floor joists depth, 14" deep minimum
PLM3 denotes 3.5" wide Parallam PSL, (min. post 4x thickness of wall)
PLM5 denotes 5.25" wide Parallam PSL (min. post 6x thickness of wall)
PLM7 denotes 7" wide Parallam PSL (min. post 8x thickness of wall)
1. Posts supporting beams as a minimum shall match width of beam & thickness of wall typical U.N.O.

FF10) ***COLLECTORS*** *(typical unless noted otherwise)*:
1. PARALLEL FRAMING ELEMENTS SUCH AS JOISTS OR BEAMS:
4" Edge nail to collector element, strap at splices as shown on the plans
2. PERPENDICULAR FRAMING ELEMENTS:
2x4 flat block or solid block and use continuous collector straps as splans

FF11) Contractor to verify all point load conditions prior to start of construction.
FF12) See also sheet SD-1 for additional notes.
FF13) See the following sheet for roof framing notes.
FF14) All plm's subject to holdown loading from above shall be tied down horizontally & vertically - See structural detail sheets.

SCALE: 1/4"=1'-0"

Ali Adib, P.E.
ATA ENGINEERING
1202 Main Street, Redwood City, CA 94063
Tel. 650.363.2338, Fax 650.363.2031, email: ata@ataeng.net

LOWER ROOF & 2ND FLOOR FRAMING PLAN

REGISTERED PROFESSIONAL ENGINEER ALI ADIB NO. CE49976 Exp. 6-30-27 CIVIL STATE OF CALIFORNIA

PLANS ARE FAVORABLY REVIEWED FOR COMPLIANCE WITH STRUCTURAL CALCULATIONS ONLY

REMODEL/ADDITION AT:
CONLEY RESIDENCE
962 HILLCREST DRIVE
REDWOOD CITY, CA 94062

DATE: 2025-07-15

S-2

OF SHEETS

PRELIMINARY NOT VALID FOR CONSTRUCTION
FOR BIDDING PURPOSES ONLY

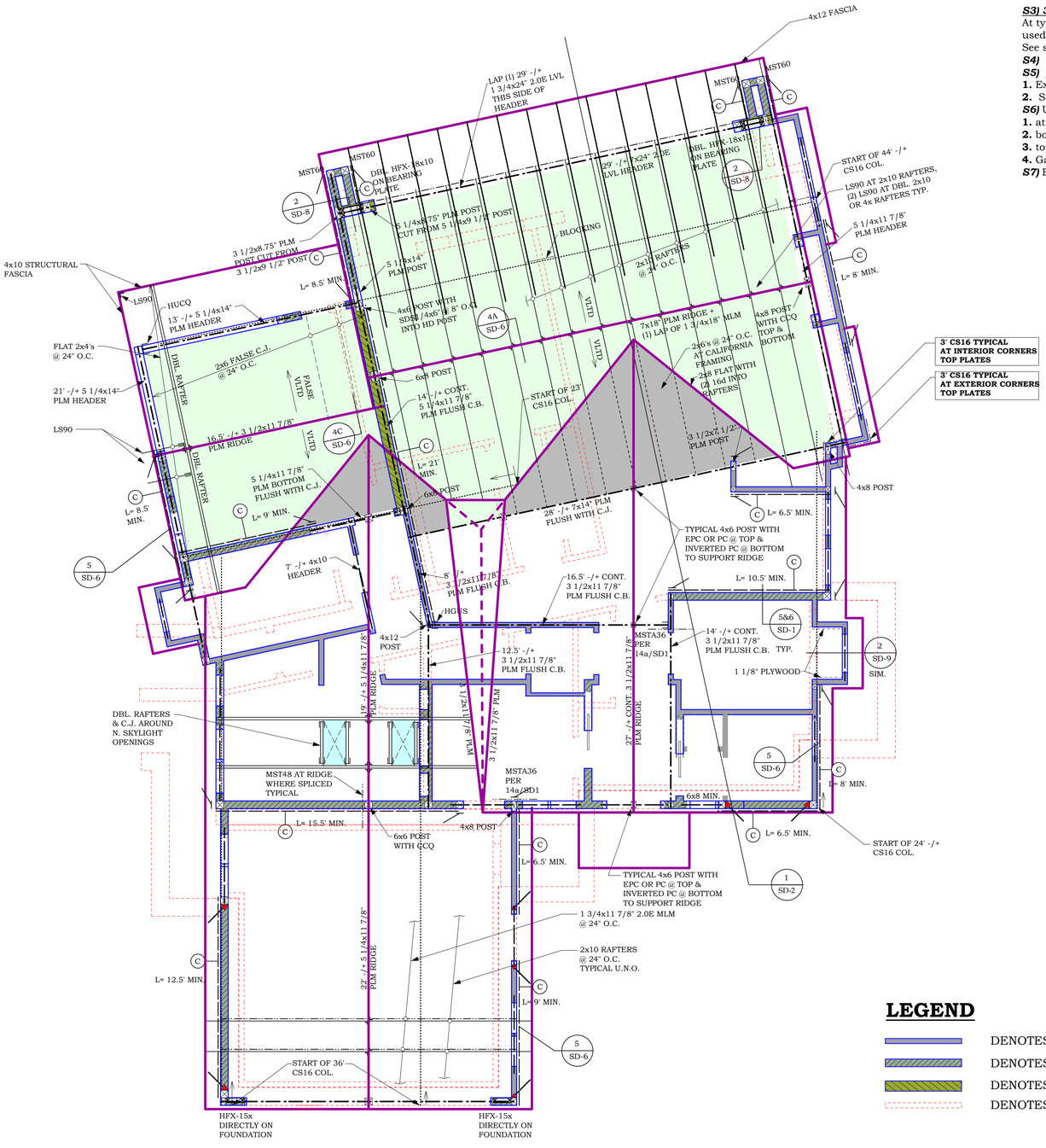

LEGEND

- DENOTES NEW 2x4 WALLS
- DENOTES NEW 2x6 WALLS
- DENOTES NEW 8.75" WIDE WALLS
- DENOTES WALLS BELOW

SHEARWALL NOTES:

S1a) Denotes holdowns straps to tie base of walls at two story conditions,
1. MST48 at 4x4 posts typical u.n.o.
2. See details 3 & 4 sheet SD1.

NOTE: HOLDOWNS ARE TO BE INSTALLED AT BOTTOM OF WALLS.

S2) Indicates shear wall plywood & nailing schedule. Type "A" on all new exterior walls, typical u.n.o. See sheet SD-1 for nailing schedule.

S3) 3X Plates required:
At type "B", "C" and "E" shearwalls, 3x nominal studs and plates are to be used at edge nailing and where panels adjoin. Top plates may be (2) 2x. See sheet SD1 details and notes and other detail sheets for shearwall detail.
S4) Run shear wall plywood continuously at wall "T" intersections.
S5) Provide shear transfer to roof & through floor framing:
1. Extend plywood to roof and provide shear transfer hardware
2. See sheet SD1 details and notes and other shear transfer details.
S6) Use *(1) MSTA36* straps per top plate:
1. at existing to new top plates
2. both or one top plate is cut where top plate detail 13/SD1 is not satisfied
3. top plates are at different elevations, see detail 14b/SD1
4. Gable walls: (1) MSTA36 over ridge line
S7) Engineer to review shearwalls and holdowns.

CONTRACTOR MUST CONTACT ENGINEER:
3 BUSINESS DAY EMAILED NOTICE IS REQUIRED:

PRIOR TO ORDERING ANY MATERIAL THE ENGINEER & ARCHITECT SHALL MEET TO CONFIRM OR MODIFY PROPOSED STRUCTURAL DESIGN.

STRUCTURAL OBSERVATIONS BY ENGINEER:
3 BUSINESS DAY EMAILED NOTICE IS REQUIRED TO SCHEDULE SITE VISITS - ENGINEER TO OBSERVE:

1- FOUNDATION:
A) REBARS FOR ANY POUR AT 10%
B) REBARS FOR ANY POUR AT 100%
2- FRAMING:
A) ANY FLOOR SURFACE PRIOR TO PLYWOOD
B) ANY WALL SURFACE PRIOR TO PLYWOOD
C) ANY ROOF SURFACE PRIOR TO PLYWOOD
3- SHEARWALLS, HOLDOWNS, & POSITIVE CONNECTORS.
4- FINAL VISIT AFTER PLUMBING & ELECTRICAL

ROOF FRAMING NOTES:

R1) Contractor to verify all point loads to be chased to framing or foundation

R2) *EXTERIOR WALLS:* *(typical unless noted otherwise)*
studs to 10' max 2x4 at 16" o.c.
studs to 16' max 2x6 at 16" o.c.
1. Gable end walls shall be balloon framed at vaulted ceiling with minimum (2) 2x king studs. Note 4x posts are required at holdowns.
2. All new plumbing walls shall be 2x6 at 16" o.c.

R3) *HEADERS:* *(typical unless noted otherwise)*
1. Headers are DFL, No. 1,
2. Engineered lumber such as PLM is preferred to minimize shrinkage
3. Double jack studs min. at spans over 5'
(4x posts are required at shearwall ends to tie holdowns)
4. At spans over 5', headers to tie to jack posts with A35's or LTP4's.
A) 2X4 WALLS;
Exterior and Interior bearing walls: 4x8 to 4' span, 4x10 to 10', 4x12 to 14'
Interior non-bearing walls, 4x8 to 6' span, 4x6 to 3' span
B) 2X6 WALLS;
Exterior and Interior bearing walls: 6x8 to 4' span, 6x10 to 11', 6x12 to 15'
Interior non-bearing walls, 6x8 to 7' span, 6x6 to 4' span

R4) *HANGERS* *(typical unless noted otherwise)*:
A) RAFTERS**:** all new rafters are to receive hangers as follows
2x6 rafters: A35,
2x8 rafters: LS70 typical, may use A35's to 6' span,
2x10 rafters: LS90 typical, may use LS70 to 12' span, A35's to 6' span,
B) *RIDGE TO HIPS:*
HRC hangers or (2) LS90's at 10" deep members, (2) LS70's at 8" deep members
C) FLUSH ROOF OR CEILING BEAMS:
Flush Parallams: HGUS
Flush DFL: HUS

R5) *POSTS* *(typical unless noted otherwise)*:
1. Posts shall not break through double top plates.
Spilce post at top plates, clip posts to plates with (2) A35's
2. Posts can be solid members or multiple studs nailed with 16d at 12" o.c per lap, (solid posts at HD's)
3. Posts to match thickness of walls and width of beams they are supporting; for example:4x6 at 2x4 wall supporting 6x beam, etc.
4. Posts supporting Ridge beams, hips, valleys or kickers shall have PC, EPC or (2) A35's or (2) LPT4's
5. Provide beams, solid blkg or posts to transfer loads to fdn or framing below
6. denote kicker posts. These are tilted posts to 45 degrees from vertical max. Connect top and bottom of kickers with (2) A35's

R6) *COLLECTORS* *(typical unless noted otherwise)*:
1. PARALLEL FRAMING ELEMENTS SUCH AS JOISTS OR BEAMS:
4" Edge nail to collector element, strap at splices as shown on the plans
2. PERPENDICULAR FRAMING ELEMENTS:
2x4 flat or solid block & use continuous collector straps as shown on the plans

R7) *RIDGE BEAMS* *(typical unless noted otherwise)*:
4X10's at 2x6 and 2x8 rafters
4x12's at 2x10 rafters

R8) *RAFTERS* *(typical unless noted otherwise)*:
2x8's at 24" o/c to 12' maximum span on horizontal projection

R9) *CEILING JOISTS* *(typical unless noted otherwise)*:
2x6 at 24" o/c to 10' maximum span
2x8 at 24" o/c to 15' maximum span
1. Where ceiling joists overlap, tie with (5) 10d nails
2. Align ceiling joists with rafters and tied with (5) 10d, see detail 7/SD1
3. Use 5/8" sheet rock at 24" o.c. spacing

R10) *HIPS & VALLEYS* *(typical unless noted otherwise)*:
at 2X6 rafters; 2x8 to 9' span, dbl 2x8's to 13' span
at 2X8 rafters; 2x10 to 11' span, dbl 2x10's to 14' span
at 2X10 rafters; 2x12 to 13' span, dbl 2x12's to 16' span
1. Nail double rafters with 16 d nails at 12" o.c. staggered
2. Hips and valley spans are based on horizontal projection
3. At Vaulted ceilings, do not back cut the underside of the hips and valleys unless approved by engineer.

R11) *CALIFORNIA FRAMING* *(typical unless noted otherwise)*:
A) RAFTERS: 2X6 at 24" o.c.
B) HIPS & VALLEYS: Lay flat (1) 2x8 over roof, nail into ex. rafters with (2) 16d
1. New Cal. Fra. over Existing roof; remove all non-structural roofing materials
2. New Cal. Fra. over New roof; plywood above and below Cal. Framed roof

SCALE: 1/4"=1'-0"

Ali Adib, P.E.
ATA ENGINEERING
1202 Main Street, Redwood City, CA 94063
Tel. 650.363.2338, Fax 650.363.2031, email: ata@ataeng.net

UPPER ROOF FRAMING PLAN

REGISTERED PROFESSIONAL ENGINEER ALI ADIB NO. CE49976 Exp. 6-30-27 CIVIL STATE OF CALIFORNIA

PLANS ARE FAVORABLY REVIEWED FOR COMPLIANCE WITH STRUCTURAL CALCULATIONS ONLY

REMODEL/ADDITION AT:
CONLEY RESIDENCE
962 HILLCREST DRIVE
REDWOOD CITY, CA 94062

DATE: 2025-07-15

S-3

OF SHEETS

PRELIMINARY NOT VALID FOR CONSTRUCTION OR FOR BIDDING PURPOSES ONLY

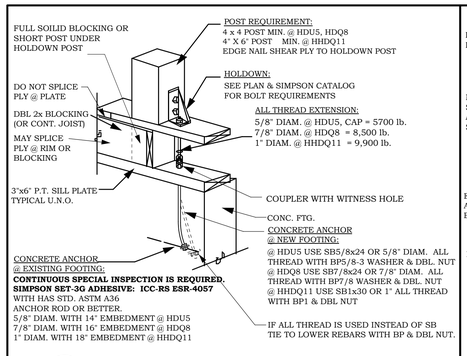

1 HOLDOWN - RAISED FLOOR - EXISTING OR NEW FOUNDATION

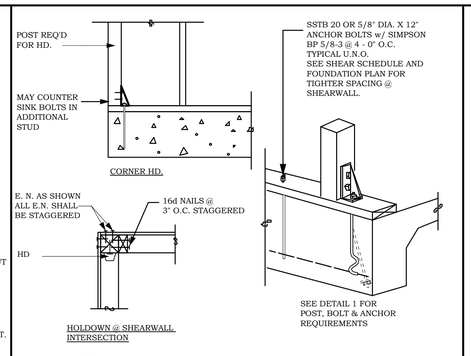

2 HOLDOWN - SLAB ON GRADE

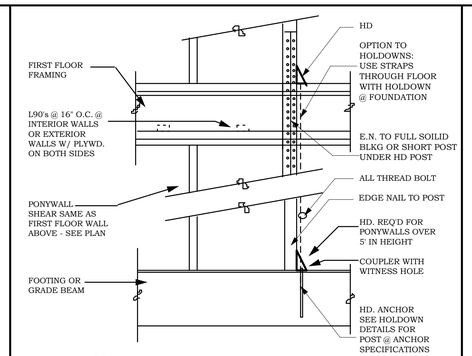

3 HOLDOWN - PONYWALL OR TWO STORY

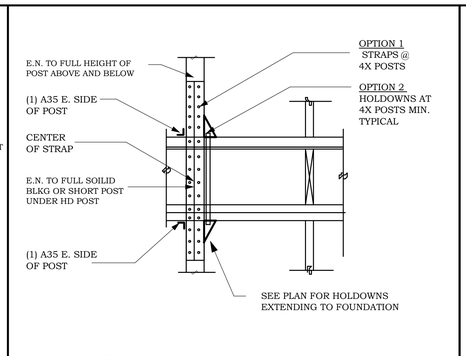

4 HOLDOWN OR STRAP THROUGH FLOOR

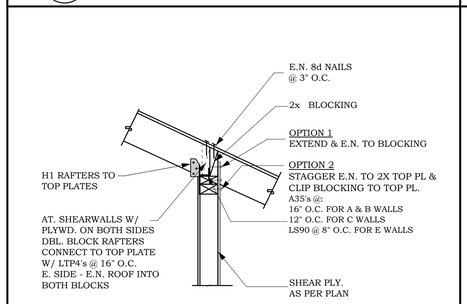

5 SHEAR TRANSFER - ROOF SHEARWALL PERPENDICULAR TO ROOF RAFTERS

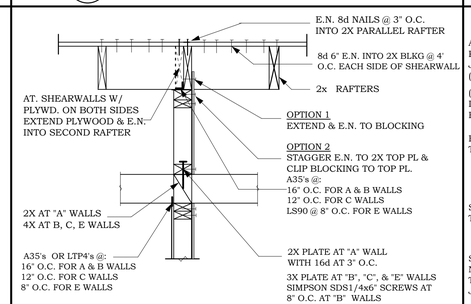

6 SHEAR TRANSFER - ROOF SHEARWALL PARALLEL TO ROOF RAFTERS

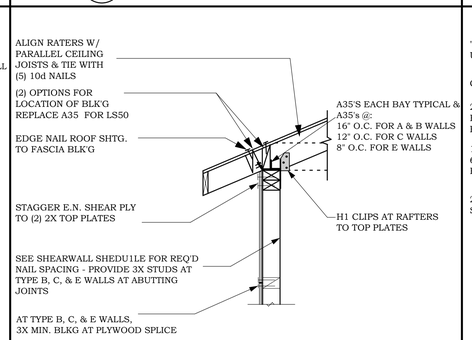

7 SHEAR TRANSFER - ROOF ROOF EAVE DETAIL

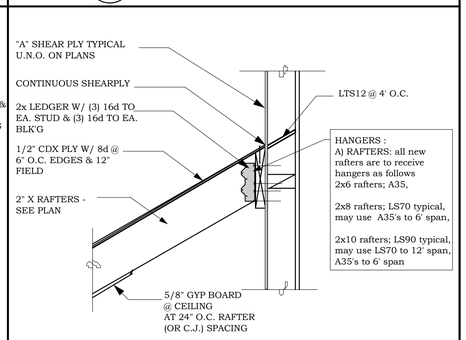

8 SHEAR TRANSFER - ROOF LOWER ROOF

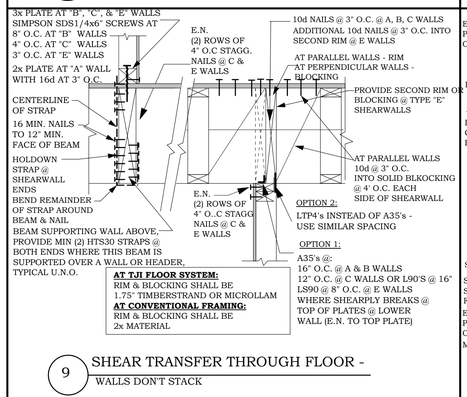

9 SHEAR TRANSFER THROUGH FLOOR - WALLS DON'T STACK

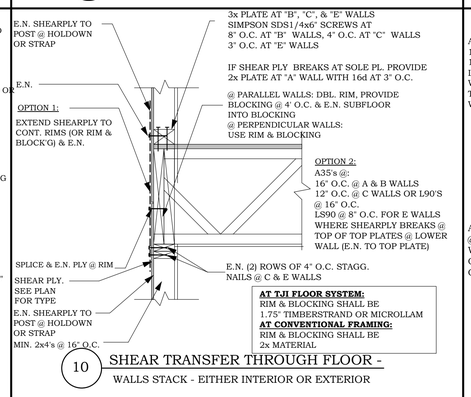

10 SHEAR TRANSFER THROUGH FLOOR - WALLS STACK - EITHER INTERIOR OR EXTERIOR

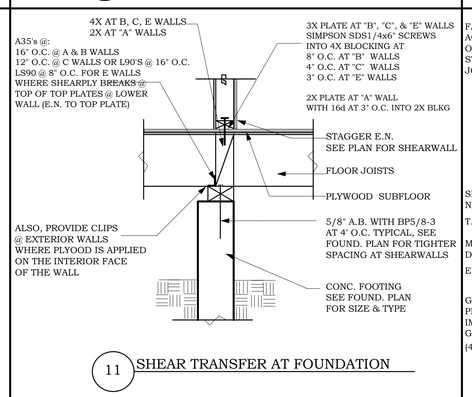

11 SHEAR TRANSFER AT FOUNDATION

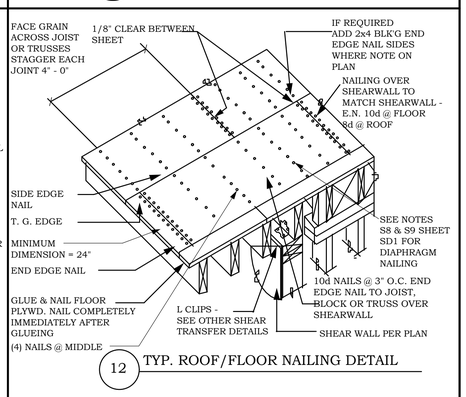

12 TYP. ROOF/FLOOR NAILING DETAIL

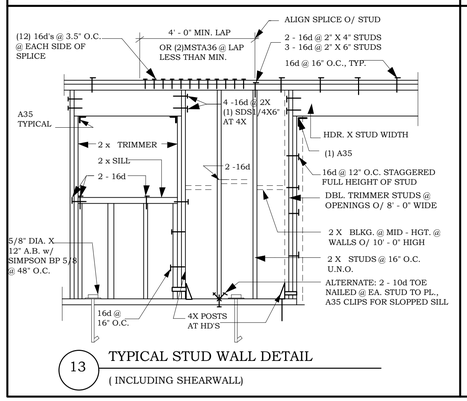

13 TYPICAL STUD WALL DETAIL (INCLUDING SHEARWALL)

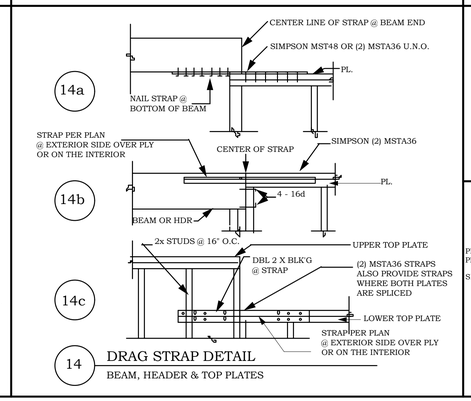

14 DRAG STRAP DETAIL BEAM, HEADER & TOP PLATES

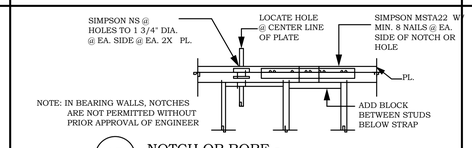

15 NOTCH OR BORE - TOP PLATES

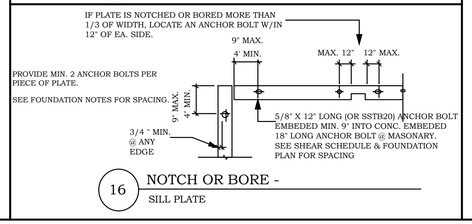

16 NOTCH OR BORE - SILL PLATE

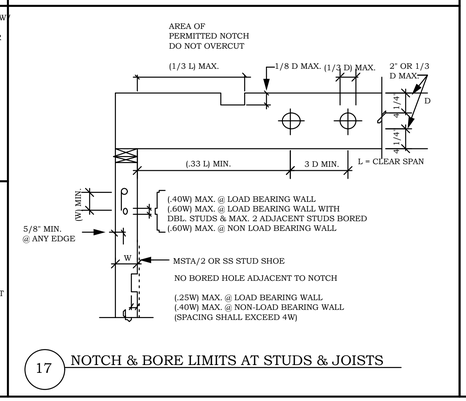

17 NOTCH & BORE LIMITS AT STUDS & JOISTS

STRUCTURAL NOTES:

CONTRACTOR IS RESPONSIBLE FOR ALL DIMENSIONS AND GRADES. CONTRACTOR SHALL VERIFY ALL CONDITIONS IN FIELD AND NOTIFY THIS OFFICE OF ANY DISCREPANCIES FOR CLARIFICATION AND/OR RESOLUTION, PRIOR TO COMMENCEMENT OF WORK. CONTRACTOR SHALL ALSO VERIFY EXISTING CONDITIONS AND REPORT TO THE ENGINEER IF ANY OF THE FOLLOWING IS FOUND:
1) DIMENSIONS ARE INCORRECT, 2) THE EXISTING BUILDING IS OUT OF SQUARE LEVEL,
3) FOUNDATION IS CRACKED, 4) DRYROT OR TERMITE DAMAGE,
5) ANY EXISTING CONDITIONS NOT SHOWN ON THEW DRAWINGS.

CONTRACTOR SHALL MEET WITH THE ENGINEER AT LEAST 2 WEEKS PRIOR TO START OF CONSTRUCTION OR DEMOLITION. ENGINEER TO REVIEW FOUNDATION PRIOR TO CONCRETE POUR(S). ENGINEER SHALL ALSO REVIEW SHEAR WALLS AND HOLDOWNS. NOTIFY ENGINEER AT LEAST 72 HOURS IN ADVANCE.

ALL WORK SHALL CONFORM WITH 2022 CALIFORNIA BUILDING CODE & 2024 INTERNATIONAL BUILDING CODE AS WELL AS ALL APPLICABLE LOCAL CODES IN EFFECT AT THE TIME OF CONSTRUCTION.

CONCRETE:

S - 1. REGULAR WEIGHT HARD ROCK. MIN. 28 DAY COMPRESSIVE STRENGTH = 2500 psi AND MAX. SLUMP = 4 inch. USE TYPE II CEMENT PER ASTM C150. NO SPECIAL INSPECTION IS REQUIRED. WATER -CEMENT RATIO FOR INTERIOR SLABS SHALL BE MAXIMUM 0.45
S - 2. ALL CAST IN PLACE CONCRETE PIERS TO BE 2500 psi. - CONCRETE SPECIAL INSPECTION IS NOT REQUIRED
S - 3. CONCRETE COVER.

	MINIMUM COVER, inches (mm)
A. Concrete cast against and permanently exposed to earth	3 (76)
B. Concrete exposed to earth or weather:	
No. 6 through No. 18 bar	2 (51)
No. 5 bar, W31 or D31 wire, and smaller.....	1 1/2 (38)
C. Concrete not exposed to weather or in contact with ground:	
Slabs, walls, joists:	
No. 14 and No. 18 bar	1 1/2 (38)
No. 11 bar and smaller	3/4 (19)
Beams, columns:	
Primary reinforcement, ties, stirrups, spirals	1 1/2 (38)
Shells, folded plate members:	
No. 6 bar and larger	3/4 (19)
No. 5 bar, W31 or D31 wire, and smaller	1/2 (12.7)

STEEL:
S - 4. ASTM A-615 GRADE 40. SPLICES AND CORNER LAP 42 DIAMETER.
S - 5. ANCHOR BOLTS: ASTM A307 5/8" X 12" OR APPROVED EQUAL w/ SIMPSON BP 5/8-3 @ 48" O.C. UNLESS NOTED OTHERWISE.

FRAMING: MAY USE APPROVED EQUAL OSB INSTEAD OF PLYWOOD TYPICAL EXCEPT @ FLOORING
S - 6. ALL FRAMING TO CONFORM TO CHAPTER 23 2022 C.B.C.
S - 7. ALL NAILING TO CONFORM TO TABLE 2304.10.2 2022 C.B.C.
S - 8. **A)** SUB-FLOOR PLYWOOD: 3/4 INCH APA RATED T&G PLYWOOD 32/16 EXPOSURE 1 MINIMUM, GLUIDED AND NAILED, TYPICAL U.N.O.
B) SUB-FLOOR NAILING: 10d NAILS @ 6" O.C. EDGE AND 10" O.C. FIELD.
S - 9. **A)** ROOF PLYWOOD: 5/8" PLYWOOD AT 24" O.C. RR, 1/2" PLYWOOD @ 16" O.C. RR SPACING. PLYWOOD SHALL BE APA RATED 24/0 EXPOSURE 1 MINIMUM, TYPICAL U.N.O.
B) ROOF NAILING: 8d COMMON NAILS @ 6" O.C. EDGE NAIL, AND 12" O.C.FIELD.
S - 10. FRAMING LUMBER: DFL NO. 2 OR BETTER. THIS INCLUDES 2" THICK TO 12" WIDE.
S - 11. STRUCTURAL LUMBER: DFL NO. 1 OR BETTER. THIS INCLUDES 4" THICK OR THICKER, AND 6" WIDE OR WIDER. EXTERIOR BEAMS TO BE TREATED.
S - 12. ALL EXTERIOR FRAMING, OR IN DIRECT CONTACT WITH CONCRETE OR EXPOSED TO HIGH MOISTURE CONDITIONS SHALL BE PRESSURE PRESERVATIVE TREATED.
S - 13. ENGINEERED LUMBER: SUBMIT AITC CERTIFICATIONS TO BUILDING DEPARTMENT PROIR TO ERECTION.
TJI PRO FLOOR JOISTS: ICC REPORT No. ESR-1153.
MICROLLAM: ICC REPORT No. ESR-1387,
BENDING STRESS: 2800 psi, SHEAR STRESS: 290 psi, E: 2,000 ksi.
PARALLAM: ICC REPORT No. ESR-1387,
BENDING STRESS: 2900 psi, SHEAR STRESS: 290 psi, E: 2,000 ksi.
GLULAM BEAMS: AIIC 117 24FV4. NO CAMBER U.N.O.
S - 14. SILL PLATES: ALL 3X PRESSURE TREATED TIMBER.
S - 15. DOUBLE FLOOR JOISTS UNDER ALL PARALLEL PARTITIONS TYPICAL U.N.O.
S - 16. PROVIDE SOLID BLOCKING UNDER ALL PERPENDICULAR PARTITIONS.
S - 17. WALL STUDS: USE 2" X 4" STUDS TO 10 FEET HIGH, 2" X 6" STUDS TO 16 FEET HIGH AND 2" X 8" STUDS TO 22 FEET HIGH (16" O.C. U.N.O.). - DOUBLE KING STUDS @ WALL ENDS FOR WALLS OVER 10 FEET.
S - 18. CONNECTORS: SIMPSON OR APPROVED EQUAL. THIS INCLUDES ANCHORS FOR SHEAR WALLS AND STRAP TIES.
S - 19. MANUFACTURED TRUSSES BALCONY AND STAIR RAILINGS TO BE PRE-ENGINEERED: SUBMIT PLANS AND CALCULATIONS TO THE APPROPRIATE AUTHORITY PRIOR TO INSTALLATION.
S - 20. PRE-MANUFACTURED SHEAR WALLS: CONTRACTOR TO THOROUGHLY REVIEW INSTALLATION SPECIFICATIONS PRIOR TO FORMING OF FOUNDATION.
HARDY FRAME: ICC REPORT No. ES-ESR-2089
SIMPSON STRONG-WALL: ICC REPORT No. ES-ESR-1267
S - 21. ALL SITE AND FOUNDATION WORK SHALL BE DONE IN ACCORDANCE WITH 2022 C.B.C CHAPTER 18 AND SOIL REPORT BY ROMIG ENGINEERS. PROJECT NUMBER 6838-1 DATED MARCH 20, 2025.
S - 22. ALL NEW FRAMING LUMBER SHALL HAVE 19% MAX MOISTURE CONTENT @ INSTALLATION
S - 23. CONNECTORS FOR PRESSURE TREATED LUMBER (NAILS, HANGERS, ANCHOR BOLTS, PLATE WASHERS, ETC) SHALL BE HOT DIPPED GALVINIZED STAINLESS STEEL SILICON BRONZE OR COPPER PER 2022 CBC 2304.9.5.
S - 24. CHOROMATED COPPER ARSENATE (CCA) AS A PRESERVATIVE FOR WOOD (GREEN WOOD) INTENDED FOR RESIDENTIAL USE IS NOT ACCEPTABLE.

S-25 THAT SPECIAL INSPECTION PER 2022 CBC CHAPTER 17 IS REQUIRED FOR THE FOLLOWING:
A. Shop and field structural welding.
B. Construction of drilled piers or piles (driving of piles; drilling of piers, testing of piles). Note that these special inspections are normally provided by the geotechnical engineer and are in addition to concrete and rebar placement special inspections, for piers provide special inspection for concrete pier compression per CBC 1808-2-22.
C. Observation of soil excavation and foundation construction operations by geotechnical engineer.
D. Holdown rods epoxied into ex. foundation- see 1/SD1.
E. Special inspection is required on all welding.
F. Special inspection for epoxied holdowns.
G. Special inspection for shearwalls 4" or less nailing.

SHEAR WALL NAILING SCHEDULE ** USE 1/2" PLYWOOD AT STUCCO WALLS. (See note S-5)

TYPE	NAILING	ANCHOR BOLT SPACING
A	3/8 INCH CDX W/ 8d @ 6" O.C. EDGES & SILL, 12" O.C. FIELD. CAP = 244 PLF	48" O.C.
B	3/8 INCH CDX W/ 8d @ 4" O.C. EDGES & SILL, (@ 3x STUDS , & PLATE, STAGGER NAILING) 12" O.C. FIELD. CAP = 350 PLF	32" O.C.
C	3/8 INCH CDX W/ 8d @ 3" O.C. EDGES & SILL, (@ 3x STUDS & PLATE, STAGGER NAILING) 12" O.C. FIELD CAP = 490 PLF.	16" O.C.
E	1/2 INCH STRUCTURAL 1 PLYWOOD W/ 10d @ 2" O.C. EDGES & SILL (@ 3x STUDS & PLATE, STAGGER NAILING) 12" O.C. FIELD. CAP = 870 PLF.	12" O.C.

** USE 1/2" PLYWOOD AT STUCCO WALLS.
SW-1. AT TYPES "B", "C", & "E" SHEARWALLS, FOUNDATION SILL PLATES AND ALL FRAMING MEMBERS RECEIVING EDGE NAILING FROM ABUTTING PANELS SHALL NOT BE LESS THAN 3" NOMINAL AND NAILS SHALL BE STAGGERED.
SW-2. WHERE PLYWOOD IS APPLIED ON BOTH FACES OF A WALL AND NAIL SPACING IS LESS THAN 6" O.C. ON EITHER SIDE, PANEL JOINTS SHALL BE ON 3" NOMINAL OR THICKER FRAMING AND NAILS ON EACH SIDE SHALL BE STAGGERED.
SW-3. FOR CONNECTION OF SOLE PLATES AT INTERIOR WALLS, SEE DETAILS 9, 10 & 11
SW-4. SEE NOTE S-5, THIS SHEET, FOR TYPICAL A.B. SPACING AND TABLE ABOVE FOR TIGHTER A.B. SPACING AT SHEARWALLS. TIGHTER SPACING SHOWN ON FOUNDATION PLAN GOVERSN OVER TABLE BELOW. PROVIDE MINIMUM (2)A.B. BETWEEN HOLDOWNS UNDER SHEARWALLS.
SW-5. MINIMUM SHEET DIMENSION FOR A PLYWOOD PANEL SHALL BE 24" UNLESS ALL EDGES OF UNDERSIZED SHEETS ARE SUPPORTED BY FRAMING MEMBERS OR BLOCKING PER SECTION 2315.5.3.
SW-6. USE COMMON NAIL FOR SHEAR NAILING. NAIL HEAD NOT TO PENETRATE PLYWOOD SURFACE, NO NAIL GUN IS ALLOWED AT SHEARWALLS.
SW-7. ALL NAILING SHALL BE STAGGERED.

THE ENGINEER EXPRESSLY RESERVES ITS COMMON LAW COPYRIGHT AND OTHER PROPERTY RIGHTS IN THESE PLANS. THESE PLANS ARE NOT TO BE REPRODUCED, ALTERED, OR COPIED IN ANY FORM OR MANNER WHATSOEVER, NOR ARE THEY TO BE ASSIGNED TO A THIRD PARTY WITHOUT FIRST OBTAINING THE WRITTEN PERMISSION AND CONSENT OF THE ENGINEER. IN THE EVENT OF UNAUTHORIZED REUSE OF THESE PLANS BY A THIRD PARTY, THE ENGINEER SHALL BE HELD HARMLESS.

Ali Aditi, P.E.
ATA ENGINEERING
1202 Main Street, Redwood City, CA 94063
Tel. 650.363.2338, Fax 650.363.2031, email: ata@ataeng.net

STRUCTURAL DETAILS & NOTES

REGISTERED PROFESSIONAL ENGINEER ALI ADITI NO. CE49976 Exp. 6-30-27 CIVIL STATE OF CALIFORNIA

PLANS ARE FAVORABLY REVIEWED FOR COMPLIANCE WITH STRUCTURAL CALCULATIONS ONLY

PRELIMINARY NOT VALID FOR CONSTRUCTION
FOR BIDDING PURPOSES ONLY

REMODEL/ADDITION AT:
CONLEY RESIDENCE
962 HILLCREST DRIVE
REDWOOD CITY, CA 94062

DATE: 2025-07-15

SD-1

OF SHEETS

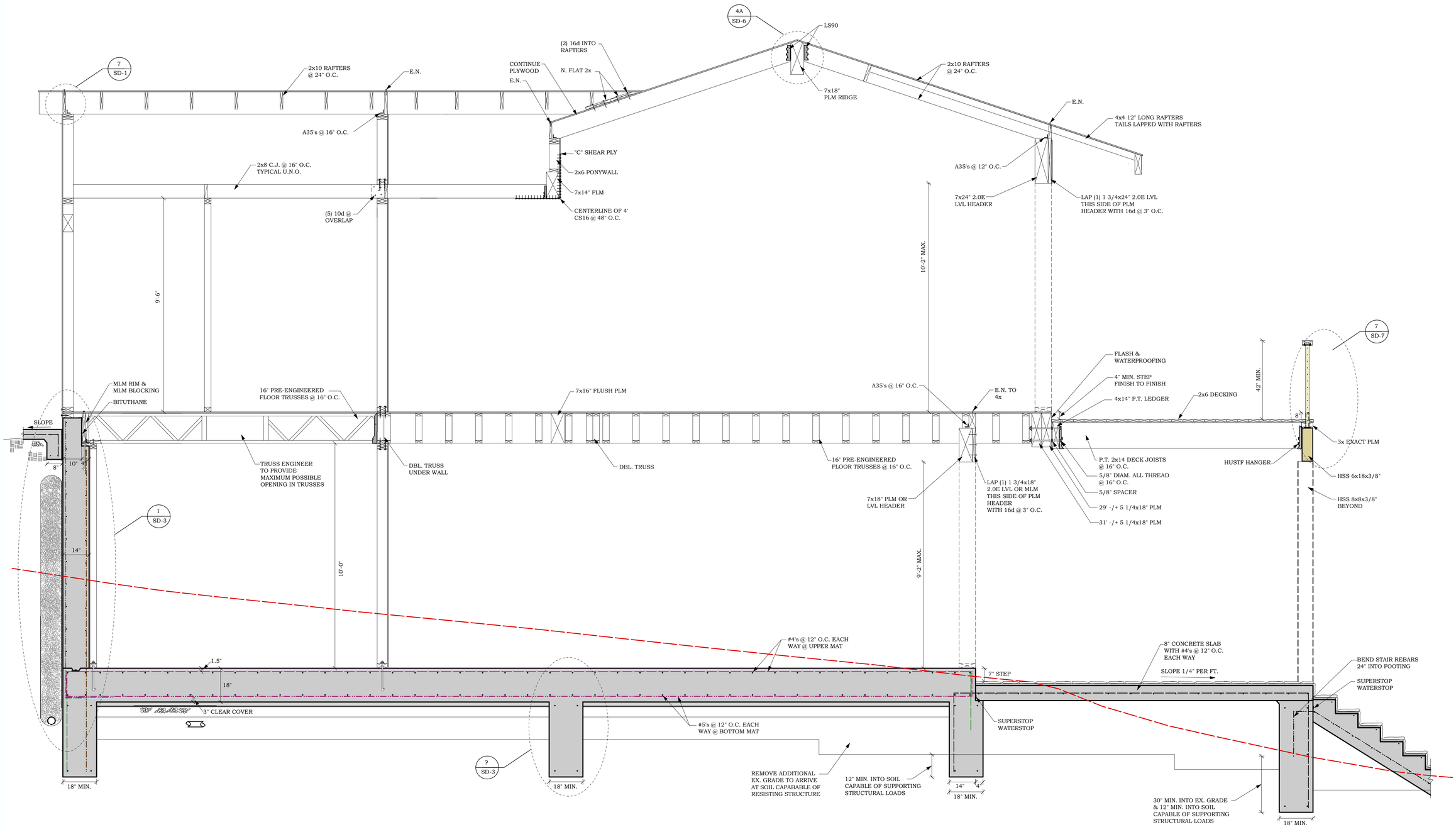

1 STRUCTURAL SECTION

SCALE: 1/2"=1'-0"

Ali Adib, P.E.

ATA ENGINEERING

1202 Main Street, Redwood City, CA 94063

Tel. 650.363.2338, Fax 650.363.2031, email: ata@ataeng.net

STRUCTURAL DETAILS

REGISTERED PROFESSIONAL ENGINEER
ALI ADIB
NO. CE49976
Exp. 6-30-27
CIVIL
STATE OF CALIFORNIA

PLANS ARE FAVORABLY REVIEWED FOR COMPLIANCE WITH STRUCTURAL CALCULATIONS ONLY

REMODEL/ADDITION AT:
CONLEY RESIDENCE
962 HILLCREST DRIVE
REDWOOD CITY, CA 94062

DATE: 2025-07-15

SD-2

OF SHEETS

PRELIMINARY NOT VALID FOR CONSTRUCTION FOR BIDDING PURPOSES ONLY

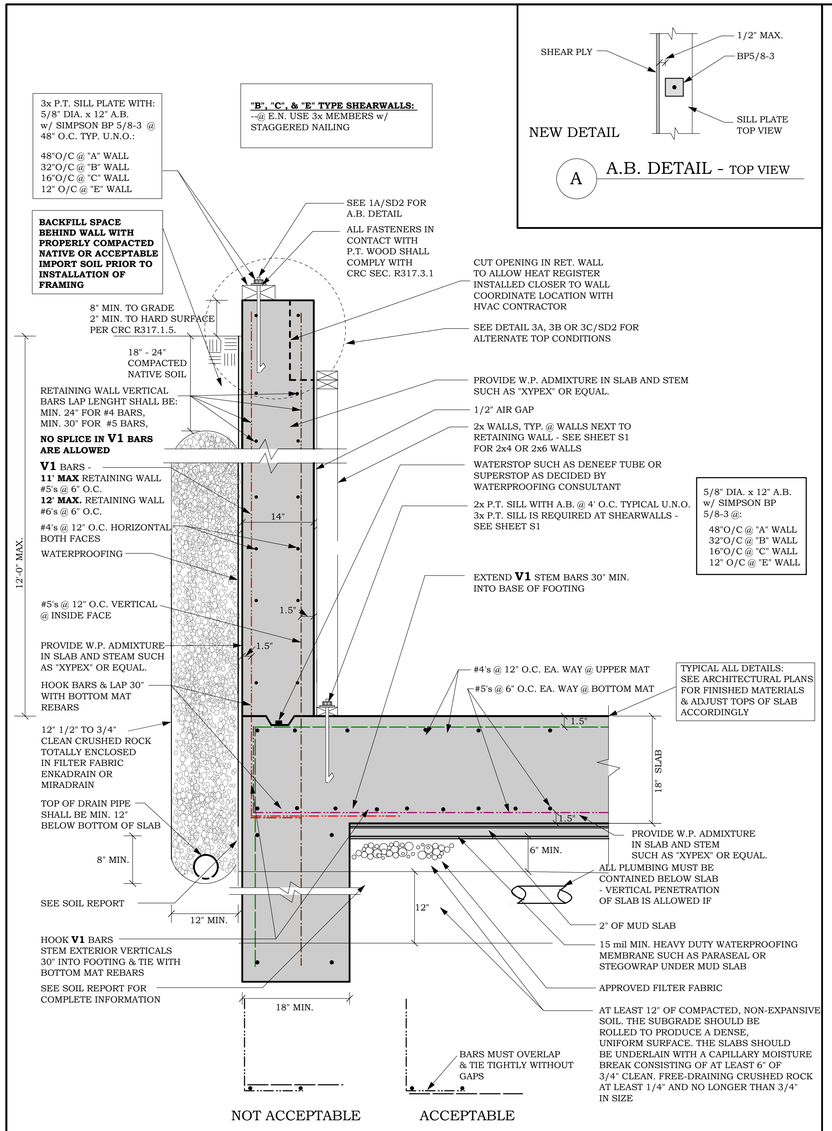

A — A.B. DETAIL - TOP VIEW

REBAR PATTERN AT OVERLAP

ALL #5's & #6's BARS AT RETAINING WALL AND SLAB SHALL BE GRADE 60

CONTRACTOR SHALL CONFIRM LOCATION OF PLUMBING LINES THRU SLAB WITH ARCHITECT & ENGINEER

CONTRACTOR SHALL RETAIN A WATER PROOFING COMPANY TO CERTIFY & INSPECT ALL WATER PROOFING ELEMENTS.
CONTRACTOR SHALL FORWARD A COPY OF THE CERTIFICATE TO ARCHITECT AND ENGINEER.
ENGINEER & ARCHITECT ARE NOT RESPONSIBLE FOR WATERPROOFING OF BASEMENT.
THE WATERPROOFING COMPANY MAY ALTER DETAILS AS FIT TO PROVIDE A WATERTIGHT BASEMENT

ENGINEER TO REVIEW REINFORCEMENT AT 10% & AT 100% - 3 EMAILED BUSINESS DAY NOTICE IS REQUIRED

1 — HOUSE RETAINING WALL

SEE ALSO 2/SD2 FOR REQUIREMENTS

2 — PARTIAL SOIL ENGINEERING NOTES

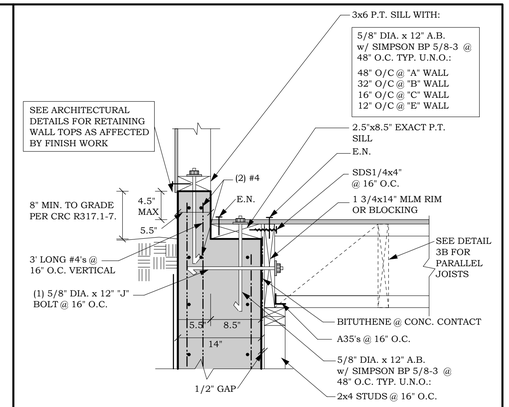

A — RETAINING WALL TOP PERP. JOISTS

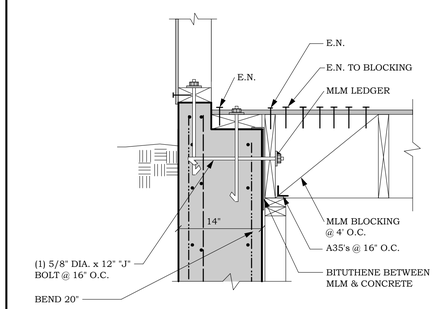

B — RETAINING WALL TOP PARALLEL JOISTS

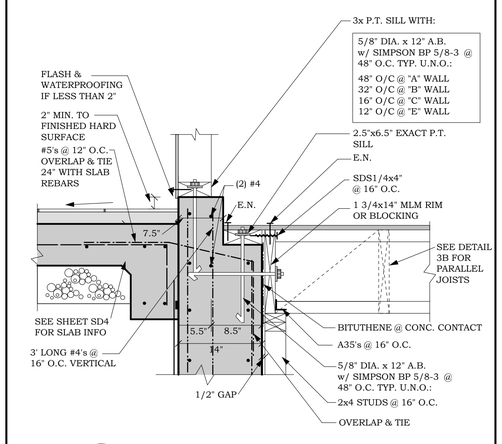

C — RETAINING WALL TOP AT SLAB

3 — ALTERNATE TOPS

Ali Adib, P.E.
ATA ENGINEERING
1202 Main Street, Redwood City, CA 94063
Tel. 650.363.2338, Fax 650.363.2031, email: ata@ataeng.net

STRUCTURAL DETAILS

REGISTERED PROFESSIONAL ENGINEER ALI ADIB NO. CE49976 Exp. 6-30-27 CIVIL STATE OF CALIFORNIA

PLANS ARE FAVORABLY REVIEWED FOR COMPLIANCE WITH STRUCTURAL CALCULATIONS ONLY

REMODEL/ADDITION AT:
CONLEY RESIDENCE
962 HILLCREST DRIVE
REDWOOD CITY, CA 94062

DATE: 2025-07-15

SD-3

OF SHEETS

PRELIMINARY NOT VALID FOR CONSTRUCTION
FOR BIDDING PURPOSES ONLY

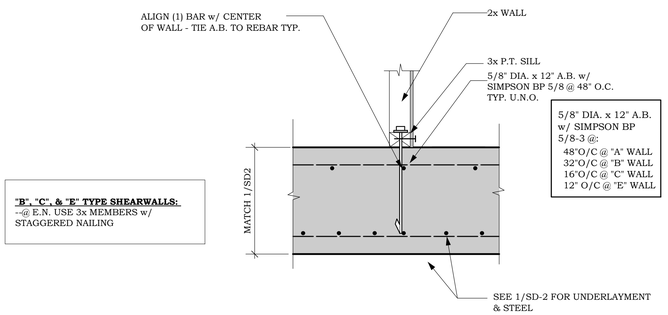

1 INTERIOR WALL

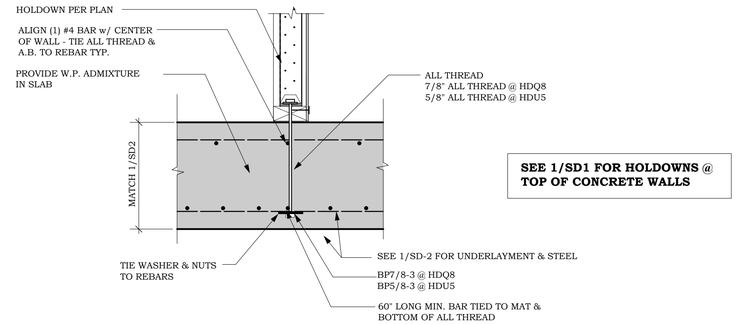

2 INT. WALL @ HOLDOWN AT SLAB

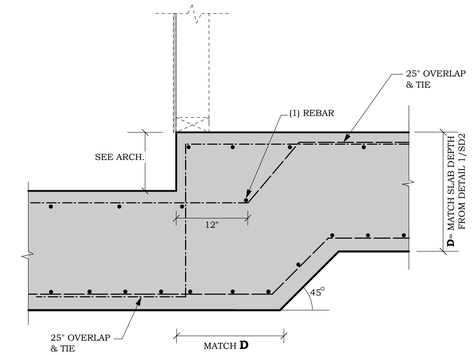

3 INTERIOR STEP DOWN

MECHANICAL ROOM

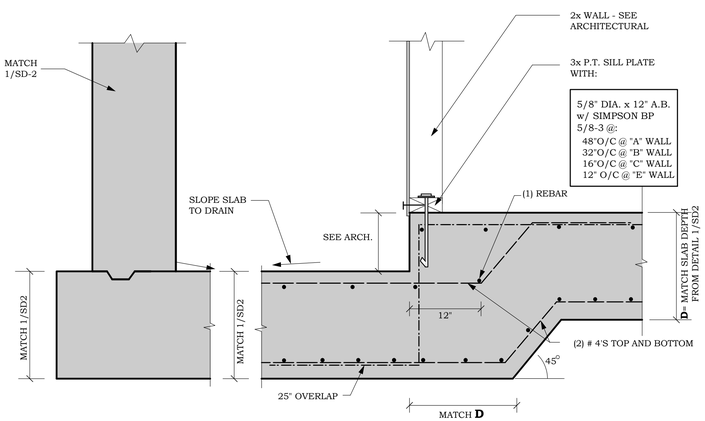

4 WALL @ LIGHT WELL

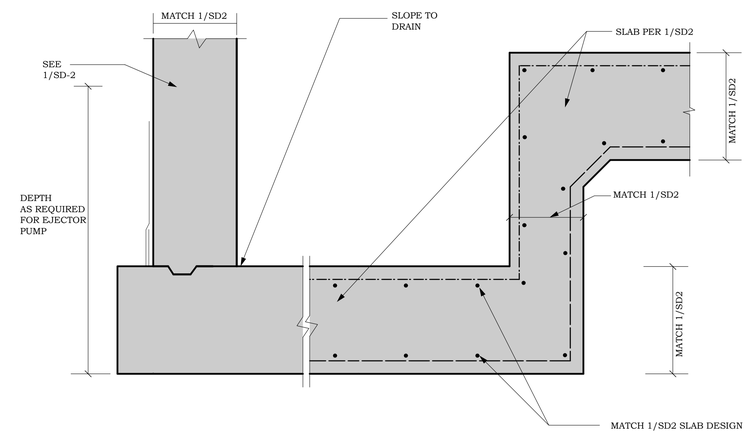

5 EJECTOR PIT

6

7

8

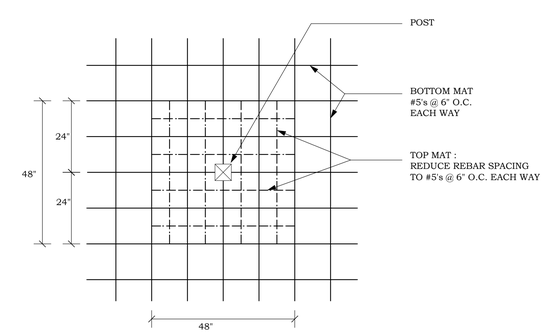

9 TOP VIEW - BOTTOM MAT REINFORCEMENT @ POST

Ali Adib, P.E.
ATA ENGINEERING
1202 Main Street, Redwood City, CA 94063
Tel. 650.363.2338, Fax 650.363.2031, email: ata@ataeng.net

STRUCTURAL DETAILS

REGISTERED PROFESSIONAL ENGINEER
ALI ADIB
NO. CE49976
Exp. 6-30-27
CIVIL
STATE OF CALIFORNIA

PLANS ARE FAVORABLY REVIEWED FOR COMPLIANCE WITH STRUCTURAL CALCULATIONS ONLY

REMODEL/ADDITION AT:
CONLEY RESIDENCE
962 HILLCREST DRIVE
REDWOOD CITY, CA 94062

DATE: 2025-07-15

SD-4

OF SHEETS

PRELIMINARY NOT VALID FOR CONSTRUCTION FOR BIDDING PURPOSES ONLY

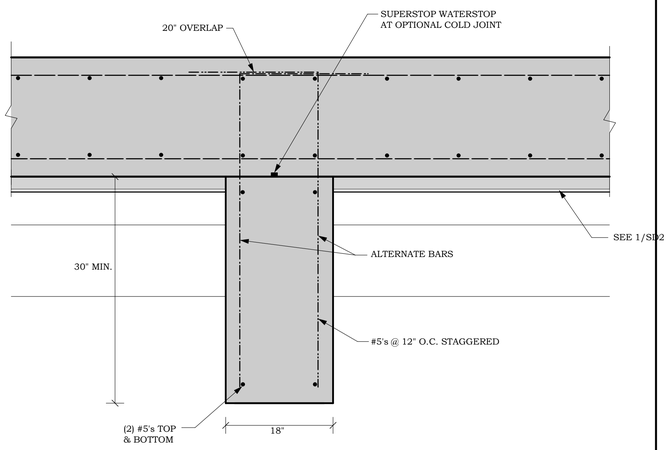

1 TIE BEAM

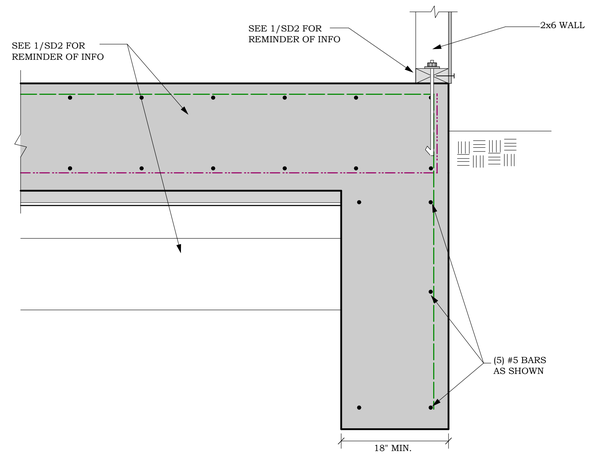

2 EXTERIOR FOOTING

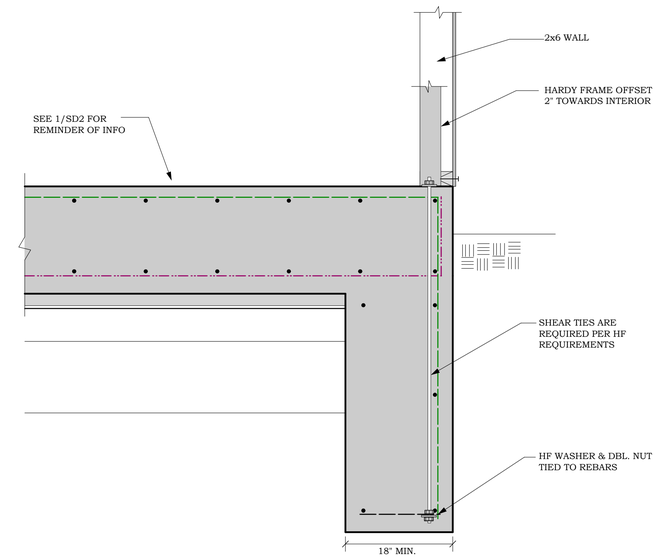

3 HARDY FRAME

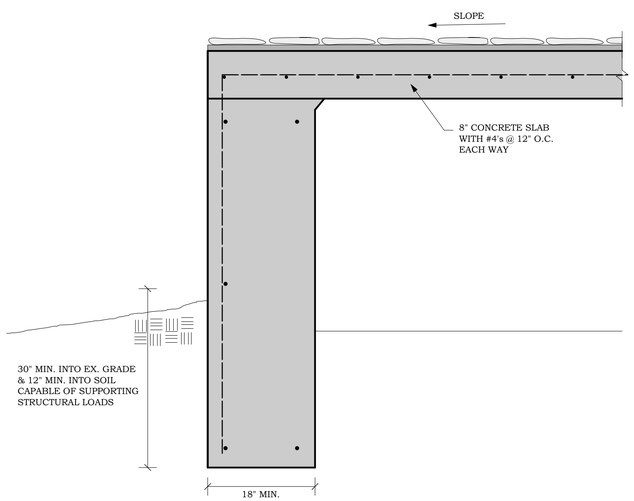

4 THICKENED EDGE

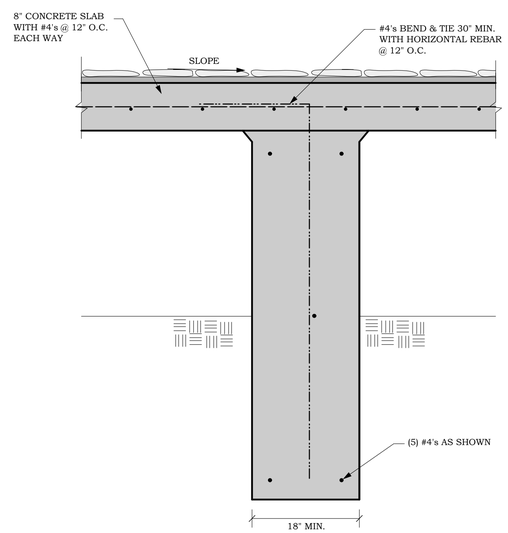

5 INTERIOR FOOTING

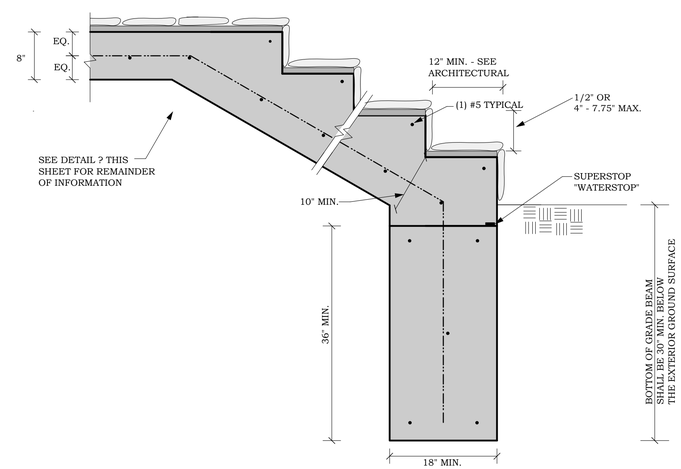

6 SLAB EDGE STAIRS

Ali Adib, P.E.
ATA ENGINEERING
1202 Main Street, Redwood City, CA 94063
Tel. 650.363.2338, Fax 650.363.2031, email: ata@ataeng.net

STRUCTURAL DETAILS

REGISTERED PROFESSIONAL ENGINEER
ALI ADIB
NO. CE49976
Exp. 6-30-27
CIVIL
STATE OF CALIFORNIA

PLANS ARE FAVORABLY REVIEWED FOR COMPLIANCE WITH STRUCTURAL CALCULATIONS ONLY

REMODEL/ADDITION AT:
CONLEY RESIDENCE
962 HILLCREST DRIVE
REDWOOD CITY, CA 94062

DATE: 2025-07-15

SD-5

OF SHEETS

PRELIMINARY NOT VALID FOR CONSTRUCTION
FOR BIDDING PURPOSES ONLY

FASTENING SCHEDULE

2022 CALIFORNIA BUILDING CODE TABLE 2304.10.2

The following are general requirements of the fastening schedule based on the 2022 CA Building Code. This handout is intended to provide only general information, for further information contact the Building & Safety Division.

	ELEMENT/CONNECTION	FASTENER	LOCATION
	ROOF		
1.	Blocking between ceiling joists, rafters or trusses to top plate or other framing below	3 - 8d common ($2^1/_2$" × 0.131") 3-10d box (3"x0.128") 3 - 3" × 0.131" nails 3 - 3" 14 gage staples, 7/16" crown	Toenail each end
	Blocking between rafters or truss not at the wall top plate, to rafter or truss	2 - 8d common ($2^1/_2$" × 0.131") 2 - 3" × 0.131" nails 2 - 3" 14 gage staples	toenail each end
		2-16d common (3 ½"x0.162") 3-3"x0.131" nails 3-3" 14 gage staples	end nail
	Flat blocking to truss and web filler	16d common (3 ½"x0.162") @6" o.c. 3" x0.131" nails @ 6" o.c. 3" 14 gage staples @ 6" o.c.	Face nail
2.	Ceiling joists to top plate	3-8d common 3-10d box 3-3"x0.131" nails 3-3" 14 gage staples, 7/16" crown	Toenail each joist
3.	Ceiling joist not attached to parallel rafter, laps over partitions (no thrust) (Table and Section2308.7.3.1)	3-16d common 4-10d box 4-3"x0.131" nails 4-3" 14 gage staples, 7/16" crown	Face nail
4.	Ceiling joists attached to parallel rafter (heel joint) (Table and Section2308.7.3.1)	Table 2308.7.3.1	Face nail
5.	Collar tie to rafter	3-10d common 4-10d box 4-3"x0.131" nails 4-3" 14 gage staples, 7/16" crown	Face nail
6.	Rafter or roof truss to top plate (Table and section 2308.7.5)	3-10 common 3-16d box 4-10d box 4-3"x0.131" nails 4-3" 14 gage staples, 7/16" crown	Toenail (6)
7.	Roof rafters to ridge valley or hip rafters; or roof rafter to 2" ridge beam	2-16d common 3-10d box 3-3"x0.131" nails 3-3" 14 gage staples, 7/16" crown	End nail
		3-10d common 3-16d box 4-10d box 4-3"x0.131" nails 4- 3" 14 gage staples, 7/16" crown	Toenail
	WALL		
8.	Stud to Stud (not at braced wall panels)	16d common	24" o.c. face nail
		10d box (3" x 0.128") 3"x0.131" nails 3-3" 14 gage staples, 7/16" crown	16" o.c. face nail
9.	Stud to stud and abutting studs at intersecting wall corners (at **braced wall panels**)	16d common	16" o.c. face nail
		16d box	12" o.c. face nail
		3"x0.131" nails 3-3" 14 gage staples, 7/16" crown	12" o.c. face nail
10.	Built-up header	16d common	16" o.c. each edge, face nail
		16d box	12" o.c. each edge, face nail
11.	Continuous header to stud	4-8d common 4-10d box	Toenail
12.	Top plate to top plate	16d common	16" o.c. face nail
		10d box 3"x0.131" nails 3" 14 gage staples, 7/16" crown	12" o.c. face nail
13.	Top plate to top plate, at end joints	8-16d common 12-10d box 12-3"x0.131" nails 12-3" 14 gage staples, 7/16" crown	Each side of end joint, face nail (min 24" lap splice length each side of end joint)
14.	Bottom plate to joist, rim joist, band joist or blocking (not at braced wall panels)	16d common	16" o.c. face nail
		16d box 3"x0.131" nails 3" 14 gage staples, 7/16" crown	12" o.c. face nail
15.	Bottom plate to joist, rim joist, band joist or blocking at **braced wall panels**	2-16d common 3-16d box 4-3"x0.131" nails 4-3" 14 gage staples, 7/16" crown	16" o.c. face nail
16.	Stud to top or bottom plate	4-8d common 4-10d box 4-3"x0.131" nails 4-3" 14 gage staples, 7/16" crown	Toenail
		2-16d common 3-10d box 3-3"x0.131" nails 3-3" 14 gage staples, 7/16" crown	End nail
17.	Top plates, laps at corners and intersections	2-16d common 3-10d box 3- 3"x0.131" nails 3-3" 14 gage staples, 7/16" crown	Face nail
18.	1" brace to each stud and plate	2-8d common 2-10d box 2- 3"x0.131" nails 2- 3" 14 gage staples, 7/16" crown	Face nail
19.	1"x6" sheathing to each bearing	2-8d common 2-10d box	Face nail
20.	1"8" and wider sheathing to each bearing	3-8d common 3-10d box	Face nail
	FLOOR		
21.	Joist to sill, top plate, or girder	3-8d common 3-10d box 3-3"x0.131" nails 3-3" 14 gage staples, 7/16" crown	Toenail
22.	Rim joist, band joist, or blocking to top plate, sill or other framing below	8d common 10d box 3"x0.131" nails 3" 14 gage staples, 7/16" crown	6" o.c., toenail
23.	1"x6" subfloor or less to each joist	2-8d common 2-10d box	Face nail
24.	2" subfloor to joist or girder	2-16d common	Face nail
25.	2" planks	2-16d common	Each bearing, face nail
26.	Built up girders and beams, 2" lumber layers	20d common	32" o.c. face nail at top and bottom staggered on opposite sides
		10d box 3"x0.131" nails 3" 14 gage staples, 7/16" crown	24" o.c. face nail at top and bottom staggered on opposite sides
		And 2-20d common 3-10dbox 3- 3"x0.131" nails 3- 3" 14 gage staples, 7/16" crown	Ends and at each splice, face nail
27.	Ledger strip supporting joists or rafters	3-16d common 4-10d box 4-3"x0.131" nails 4-3" 14 gage staples, 7/16" crown	Each joist or rafter, face nail
28.	Joist to band joist or rim joist	3-16d common 4-10d box 4-3"x0.131" nails 4-3" 14 gage staples, 7/16" crown	End nail
29.	Bridging or blocking to joist, rafter or truss	2-8d common 2-10d box 2-3"x0.131" nails 2-3" 14 gage staples, 7/16" crown	Each end, toenail

			EDGES (inches)	INTERMEDIATE SUPPORTS (inches)
	WOOD STRUCTURAL PANS, SUB FLOOR, ROOF AND INTERIOR WALL SHEATHING TO FRAMING AND PARTICLEBOARD WALL SHEATHING TO FRAMING (a)			
30.	3/8"-1/2"	6d common or deformed (2"x0.113") (subfloor and wall)	6	12
		8d box or deformed or RSRS-01 (roof)	6	12
		2 3/8"x0.113" nail (subfloor and wall)	6	12
		1 ¾" 16 gage staple, 7/16" crown	4	8
		2 3/8" x0.113" nail (roof)	4	8
		1 ¾"16 gage staple, 7/16" crown (roof)	3	6
31.	19/32" –3/4"	8d common/6d deformed (subfloor/walls) 8d common/deformed or RSRS-01 (roof)	6	12
		2 3/8"x0.113 nail 2" 16" gage staple, 7/16" crown	4	8
32.	7/8" – 1/4"	10d common 8d deformed	6	12
	OTHER EXTERIOR WALL SHEATHING			
33.	1/2" fiberboard sheathing(d)	1 ½" galvanized roof nail 1 ¼" 16 gage staple with 7/16" or 1" crown	3	6
34.	25/32" fiberboard sheathing (b)	1 ¾" galvanized roof nail 1 ½" 16 gage staple with 7/16" or 1" crown	3	6
	WOOD STRUCTURAL PANELS, COMBINATION SUBFLOOR UNDERLAYMENT TO FRAMING			
35.	¾" and less	8d common 6d deformed	6	12
36.	7/8"-1"	8d common 8d deformed	6	12
37.	1 1/8"-1 ¼"	10d common 8d deformed	6	12
	PANEL SIDING TO FRAMING			
38.	½" or less	6d corrosion-resistant siding 6d corrosion-resistant casing	6	12
39.	5/8"	8d corrosion-resistant siding 8d corrosion-resistant casing	6	12
	INTERSIOR PANELING			
40.	¼"	4d casing 4d finish	6	12
41.	3/8"	6d casing 6d finish (panel supports at 24")	6	12

For SI: 1 inch = 25.4 mm.

a. Nails spaced at 6 inches at intermediate supports where spans are 48" or more. For nailing of wood structural panel and particleboard diaphragms and shear walls, refer to Section 2305. Nails for wall sheathing are permitted to be common, box or casing.

b. Spacing shall be 6 inches on center on the edges and 12 inches on center at intermediate supports for nonstructural applications. Panel supports at 16 inches (20 inches if strength axis in the long direction of the panel, unless otherwise marked).

c. Where a rafter is fastened to an adjacent parallel ceiling joist in accordance with this schedule and the ceiling joist is fastened to the top plate in accordance with this schedule, the number of toenails in the rafters shall be permitted to be reduced by one nail.

** See Table 2304.10.1 for more information

1 NAILING/FASTENING SCHEDULE

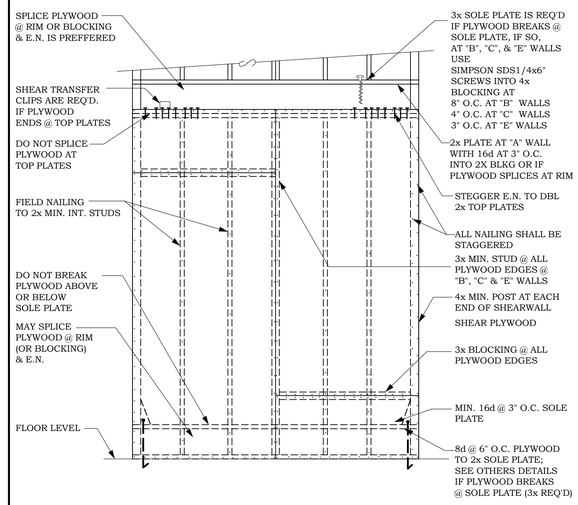

2 TYPICAL SHEARWALL DETAIL

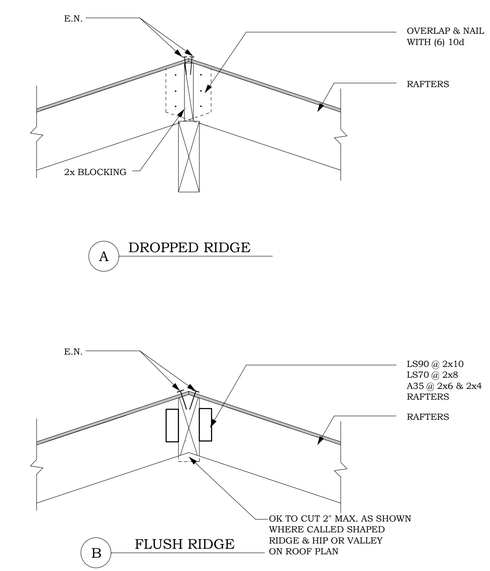

3 RIDGE DETAIL @ NON-VAULTED CEILING

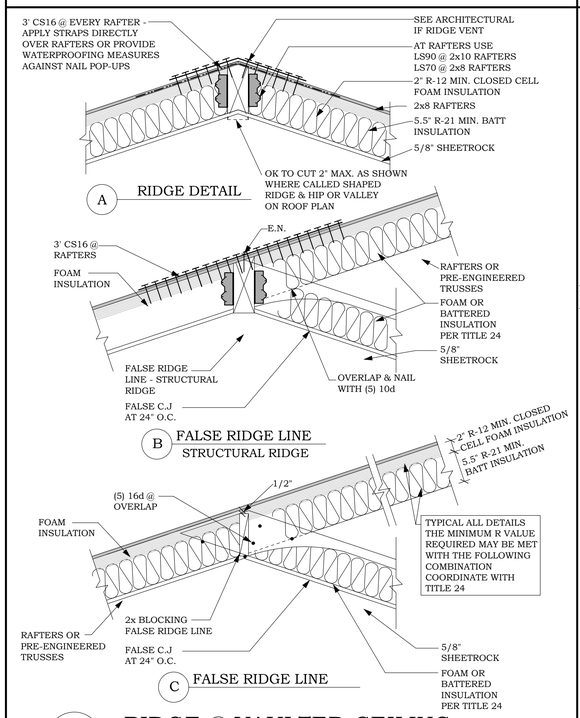

4 RIDGE @ VAULTED CEILING

FOAM INSULATION

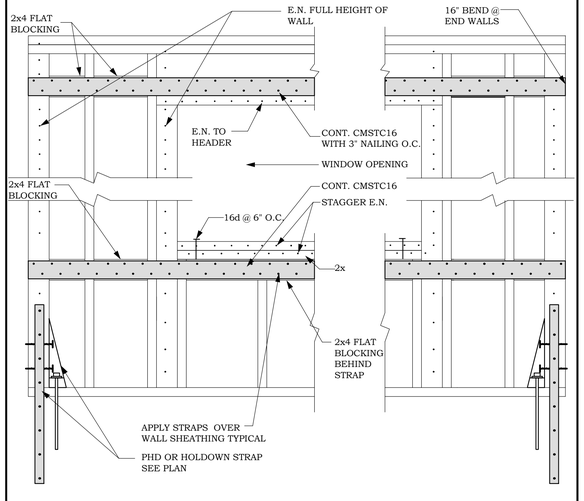

5 OPENING IN SHEARWALL

Ali Adib, P.E.
ATA ENGINEERING
1202 Main Street, Redwood City, CA 94063
Tel. 650.363.2338, Fax 650.363.2031, email: ata@ataeng.net

STRUCTURAL DETAILS

REGISTERED PROFESSIONAL ENGINEER ALI ADIB NO. CE49976 Exp. 6-30-27 CIVIL STATE OF CALIFORNIA

PLANS ARE FAVORABLY REVIEWED FOR COMPLIANCE WITH STRUCTURAL CALCULATIONS ONLY

REMODEL/ADDITION AT:
CONLEY RESIDENCE
962 HILLCREST DRIVE
REDWOOD CITY, CA 94062

DATE: 2025-07-15

SD-6

OF SHEETS

PRELIMINARY NOT VALID FOR CONSTRUCTION
FOR BIDDING PURPOSES ONLY

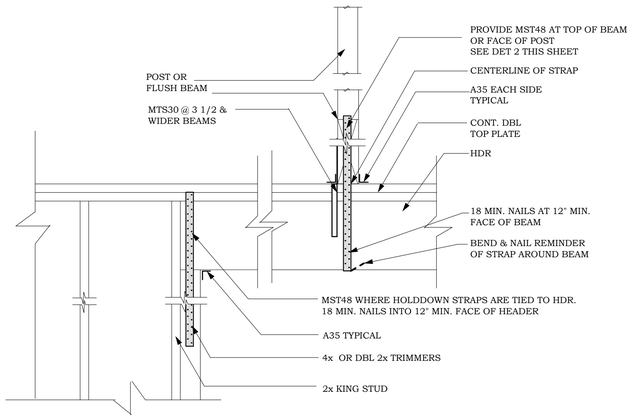

1 HEADER SUPPORTING HOLDOWNS STRAPS

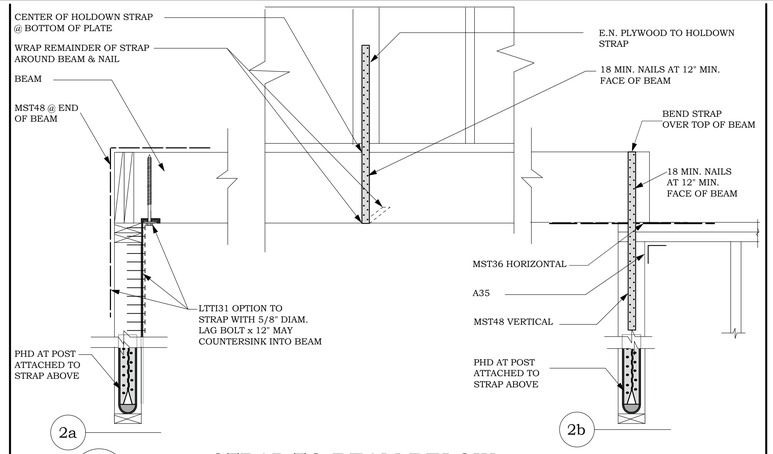

2 STRAP TO BEAM BELOW

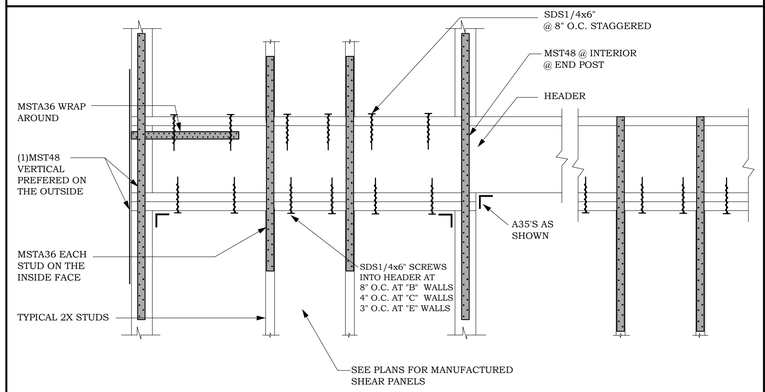

A TWO STORY

B ONE STORY

3 CONTINUOUS BEAM THROUGH WALL

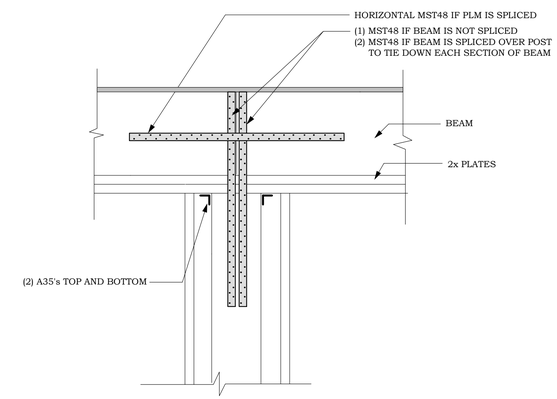

4 BEAM TIE DOWN

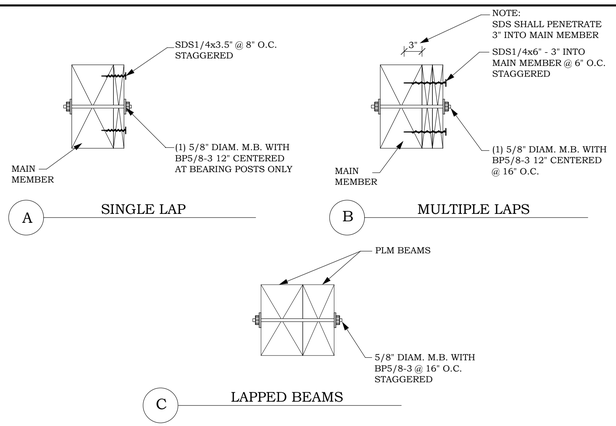

A SINGLE LAP

B MULTIPLE LAPS

C LAPPED BEAMS

5 TYPICAL LAPPED BEAM

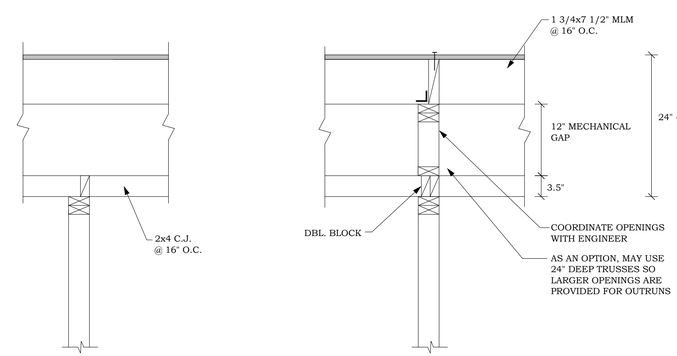

A NON-BEARING WALL

B BEARING WALL

6 ALTERNATE FRAMING

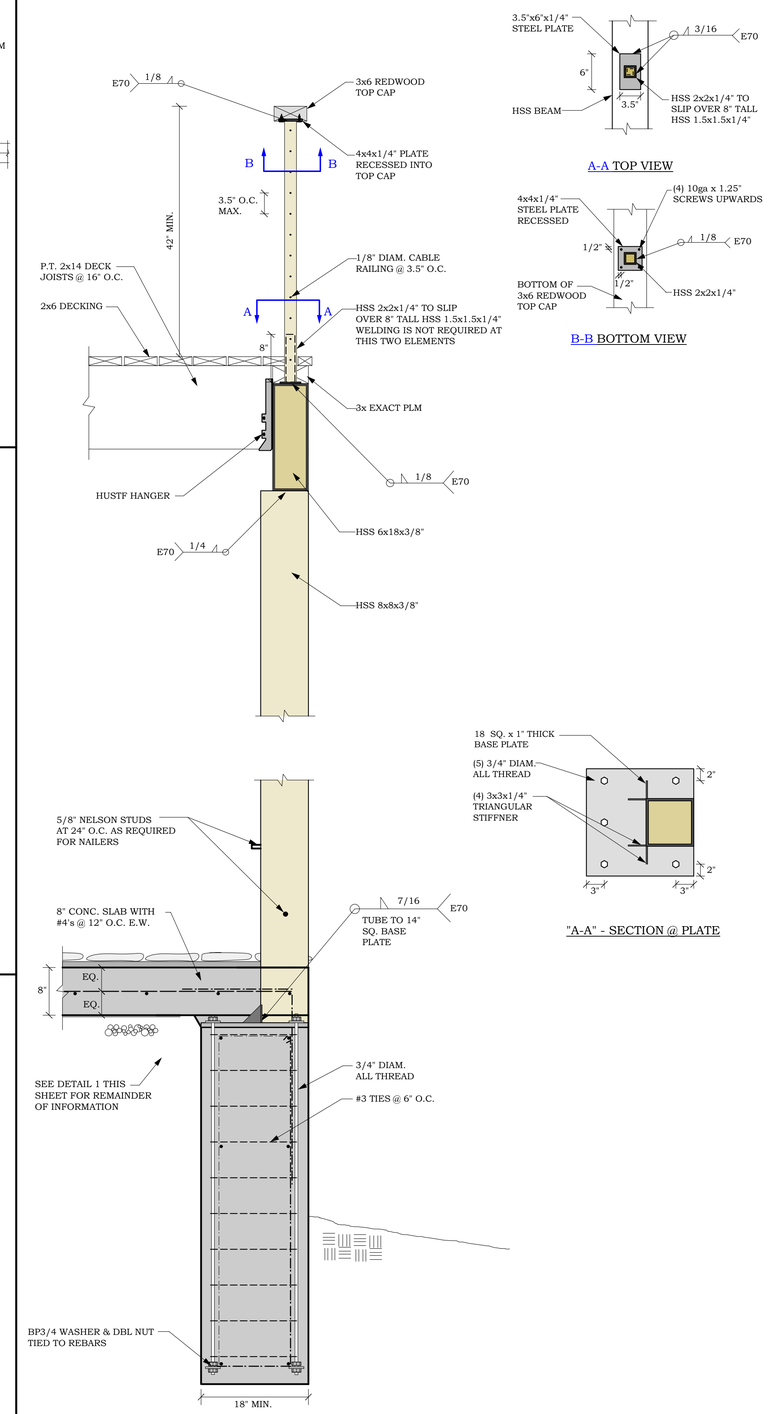

7 POST TO FOOTING

Ali Adib, P.E.
ATA ENGINEERING
1202 Main Street, Redwood City, CA 94063
Tel. 650.363.2338, Fax 650.363.2031, email: ata@ataeng.net

STRUCTURAL DETAILS

REGISTERED PROFESSIONAL ENGINEER ALI ADIB NO. CE49976 Exp. 6-30-27 CIVIL STATE OF CALIFORNIA

PLANS ARE FAVORABLY REVIEWED FOR COMPLIANCE WITH STRUCTURAL CALCULATIONS ONLY

REMODEL/ADDITION AT:
CONLEY RESIDENCE
962 HILLCREST DRIVE
REDWOOD CITY, CA 94062

DATE: 2025-07-15

SD-7

OF SHEETS

PRELIMINARY NOT VALID FOR CONSTRUCTION FOR BIDDING PURPOSES ONLY

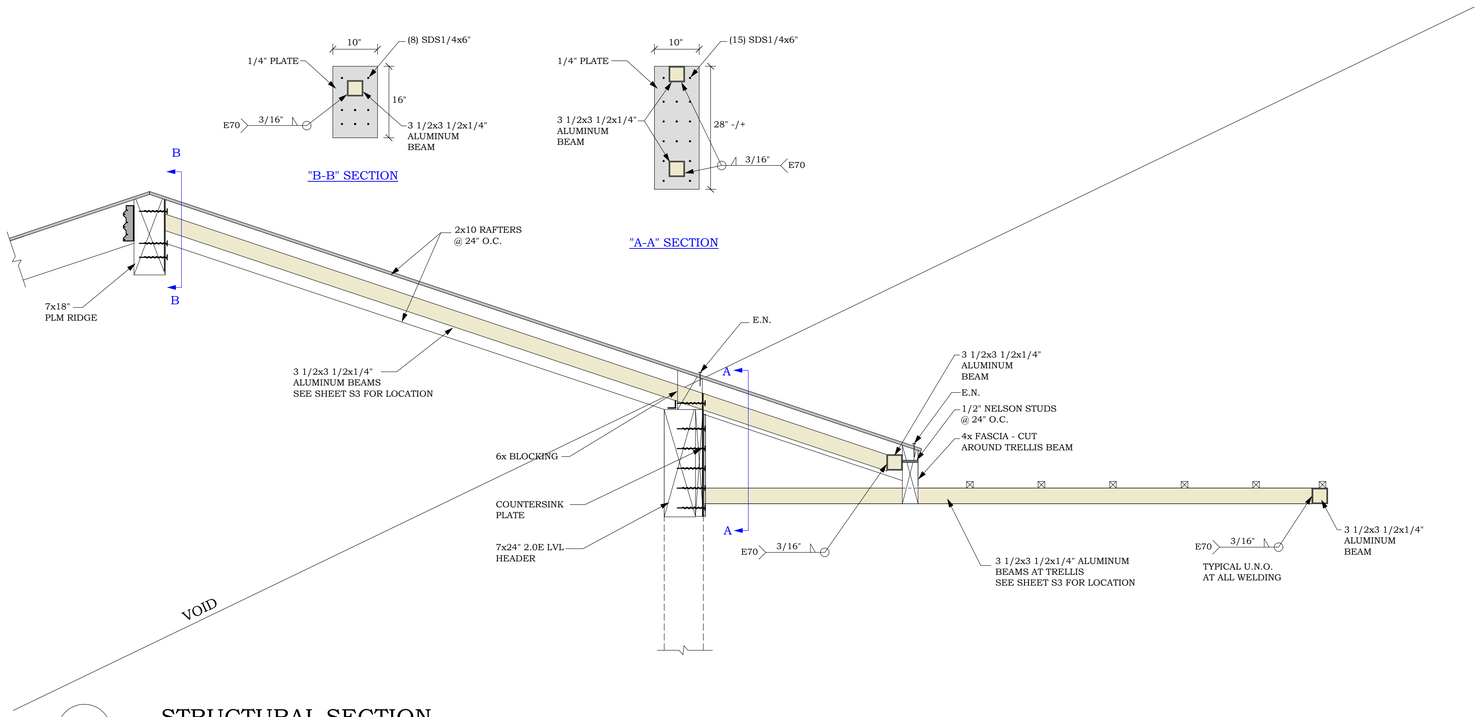

1 STRUCTURAL SECTION

SCALE: 3/4"=1'-0"

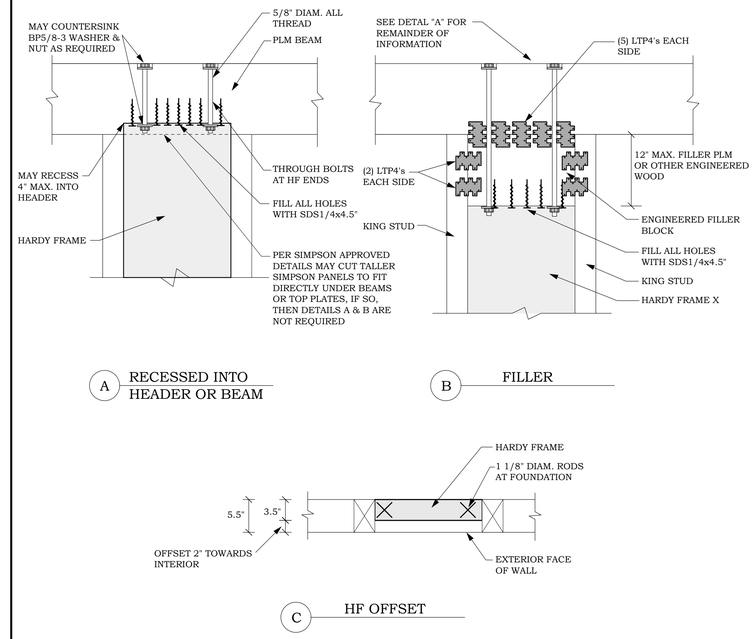

2 HARDY FRAME AT BEAM OR HEADER

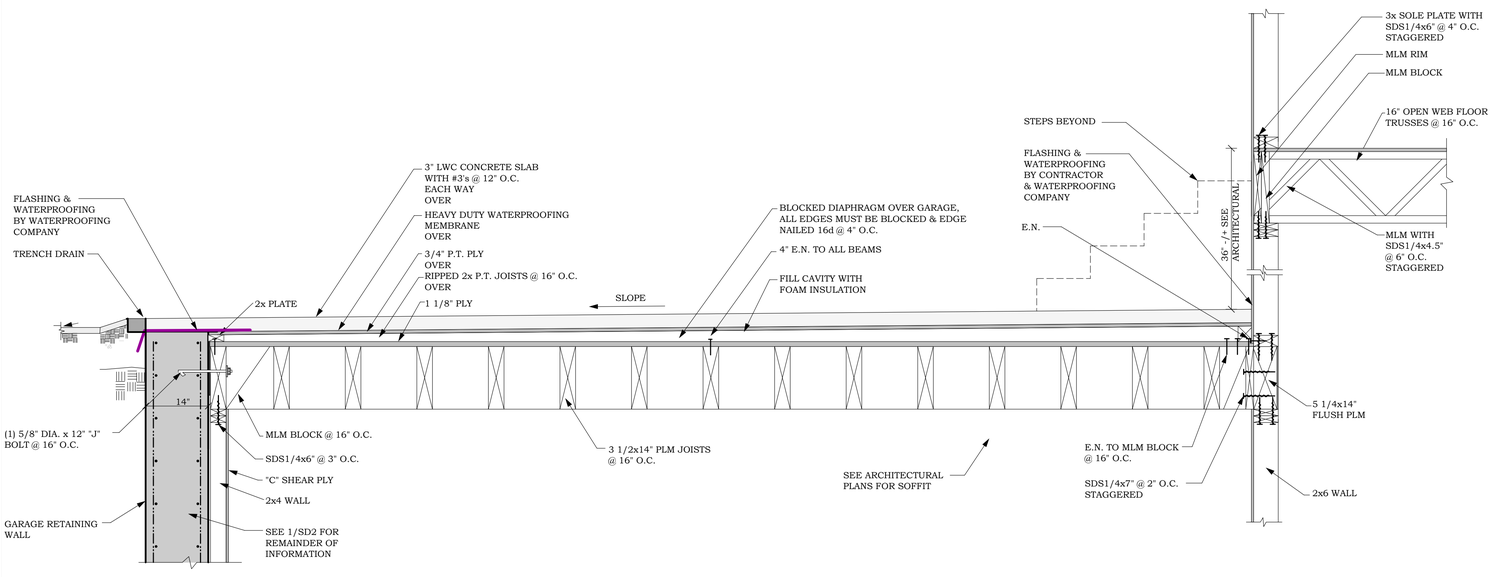

3 STRUCTURAL SECTION - THROUGH GARAGE

SCALE: 3/4"=1'-0"

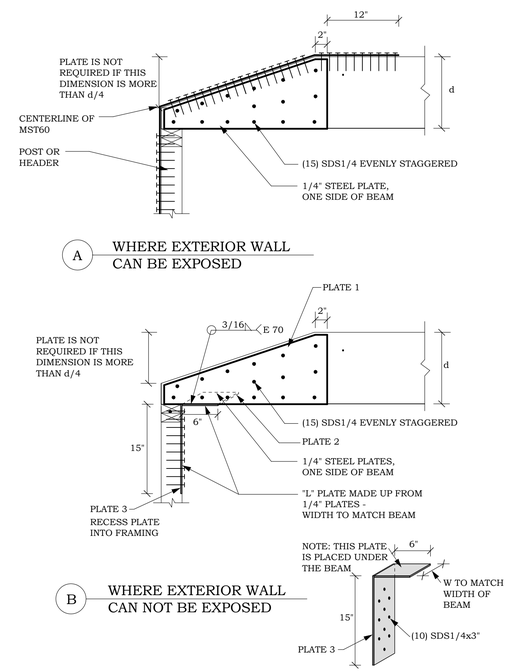

4 BEAM REINFORCEMENT- WALL

Ali Adib, P.E.
ATA ENGINEERING
1202 Main Street, Redwood City, CA 94063
Tel. 650.363.2338, Fax 650.363.2031, email: ata@ataeng.net

STRUCTURAL DETAILS

REGISTERED PROFESSIONAL ENGINEER ALI ADIB NO. CE49976 Exp. 6-30-27 CIVIL STATE OF CALIFORNIA

PLANS ARE FAVORABLY REVIEWED FOR COMPLIANCE WITH STRUCTURAL CALCULATIONS ONLY

PRELIMINARY NOT VALID FOR CONSTRUCTION FOR BIDDING PURPOSES ONLY

REMODEL/ADDITION AT:
CONLEY RESIDENCE
962 HILLCREST DRIVE
REDWOOD CITY, CA 94062

DATE: 2025-07-15

SD-8

OF SHEETS

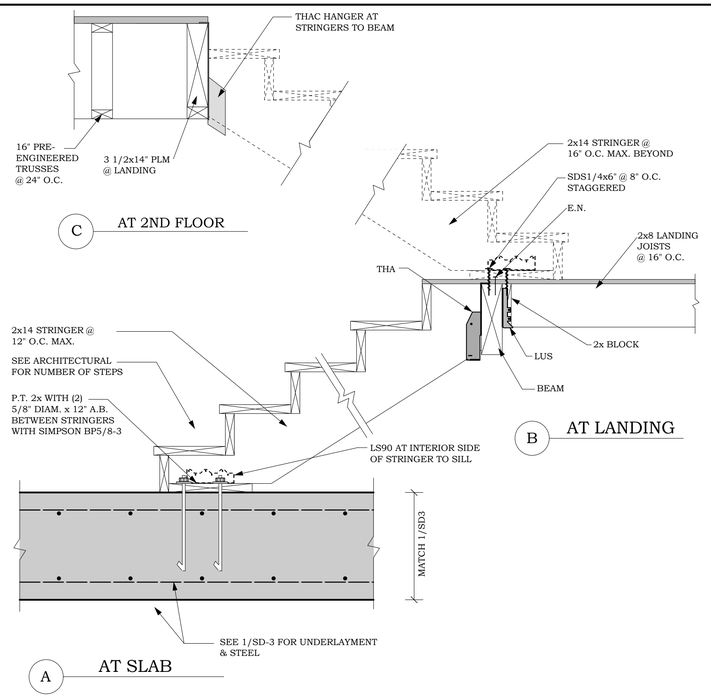

1 STRINGER CONNECTION

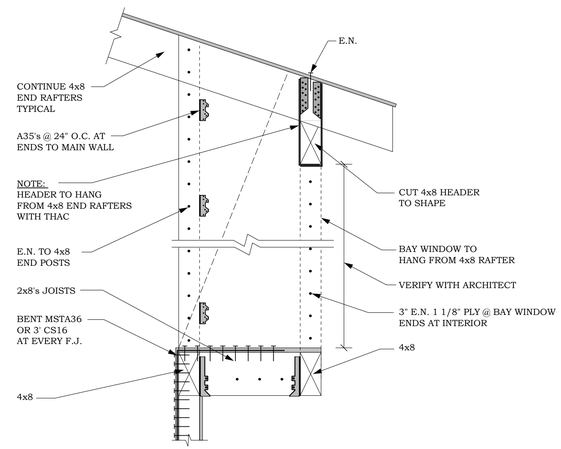

2 CANTILEVER BAY WINDOW

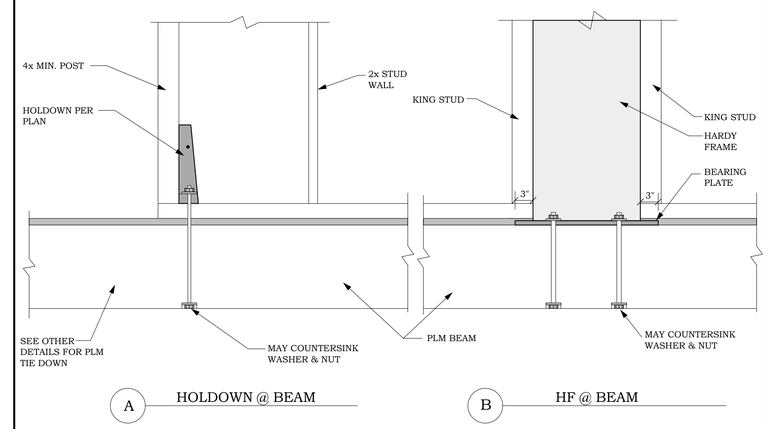

3 BOLTS IN BEAM

4

5

6

Ali Adib, P.E.
ATA ENGINEERING
1202 Main Street, Redwood City, CA 94063
Tel. 650.363.2338, Fax 650.363.2031, email: ata@ataeng.net

STRUCTURAL DETAILS

REGISTERED PROFESSIONAL ENGINEER
ALI ADIB
NO. CE49976
Exp. 6-30-27
CIVIL
STATE OF CALIFORNIA

PLANS ARE FAVORABLY REVIEWED FOR COMPLIANCE WITH STRUCTURAL CALCULATIONS ONLY

REMODEL/ADDITION AT:
CONLEY RESIDENCE
962 HILLCREST DRIVE
REDWOOD CITY, CA 94062

DATE: 2025-07-15

SD-9

OF SHEETS

PRELIMINARY NOT VALID FOR CONSTRUCTION FOR BIDDING PURPOSES ONLY

BACK TO BACK REINFORCED ANCHORAGE (BB-RA)

Model	Panel Width (in)	Anchorage[1]	Rod Dia (in)	Rod[2,3] Grade	BB-RA le[4] (in)	BB-RA Ca1[5] (in)	BB-RA Ca2[6] (in)	Stirrups[9] (in)	Shear[7] Ties
HFX-9x	9	1-1/8-STD-BB-RA	1-1/8	STD	15	19-3/4	11	8 - # 4	# 3 (min) @ 3-3/4" OC
HFX-12x	12	1-1/8-STD-BB-RA		STD	23	20-5/8		13 - # 4	# 3 (min) @ 4" OC
		1-1/8-HS-BB-RA		HS					
HFX-15x	15	1-1/8-STD-BB-RA		STD				14 - # 4	
		1-1/8-HS-BB-RA		HS					
HFX-18x	18	1-1/8-STD-BB-RA		STD				15 - # 4	# 4 (min) @ 4" OC
		1-1/8-HS-BB-RA		HS					
HFX-21x	21	1-1/8-STD-BB-RA		STD				16 - # 4	
		1-1/8-HS-BB-RA		HS					
HFX-24x	24	1-1/8-STD-BB-RA		STD				18 - # 4	
		1-1/8-HS-BB-RA		HS					

BACK TO BACK REINFORCED ANCHORAGE NOMENCLATURE

1-1/8 - STD - BB - RA
- REINFORCED ANCHORAGE
- "BACK TO BACK" INSTALLATION
- ROD GRADE
- ROD DIAMETER

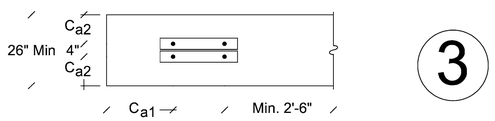

3

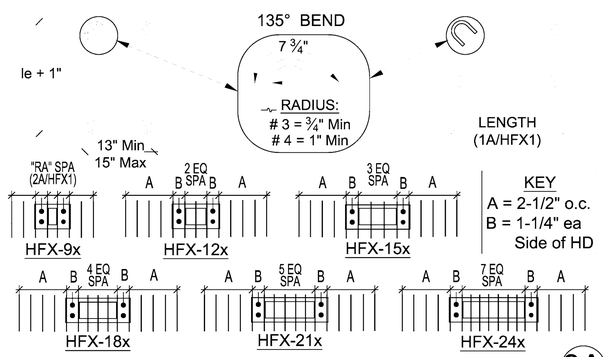

BB-RA SHEAR TIES & STIRRUPS

3A

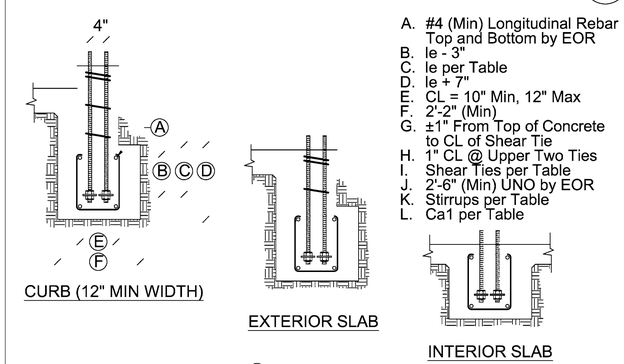

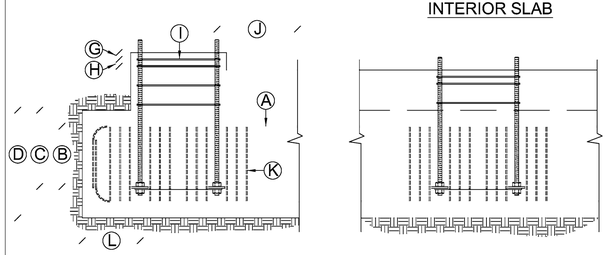

BB-RA SECTIONS & ELEVATIONS

3B

REINFORCED ANCHORAGE (RA)

Model	Panel Width (in)	Anchorage[1]	Rod Dia (in)	Rod[2,3] Grade	RA le[4] (in)	RA Ca1[5] (in)	Ca2[6] (in)	Stirrups[9] (in)	Shear[7] Ties
HFX-9x	9	1-1/8-STD-RA	1-1/8	STD	15	19-3/4	11	8 - # 4	# 3 (min) @ 3-3/4" OC
HFX-12x	12	1-1/8-STD-RA		STD				9 - # 4	# 3 (min) @ 4" OC
		1-1/8-HS-RA		HS					
HFX-15x	15	1-1/8-STD-RA		STD				10 - # 4	
		1-1/8-HS-RA		HS					
HFX-18x	18	1-1/8-STD-RA		STD		20-5/8			# 4 (min) @ 4" OC
		1-1/8-HS-RA		HS					
HFX-21x	21	1-1/8-STD-RA		STD				11 - # 4	
		1-1/8-HS-RA		HS					
HFX-24x	24	1-1/8-STD-RA		STD				12 - # 4	
		1-1/8-HS-RA		HS					

REINFORCED ANCHORAGE NOMENCLATURE

1-1/8 - STD - RA
- REINFORCED ANCHORAGE
- ROD GRADE
- ROD DIAMETER

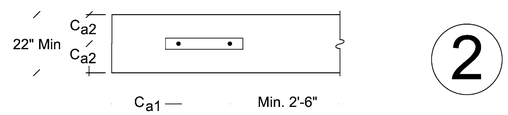

2

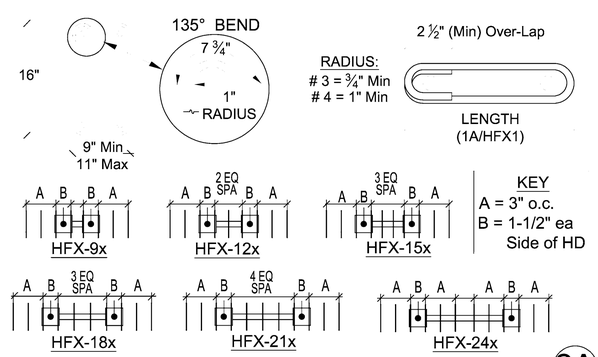

RA SHEAR TIES & STIRRUPS

2A

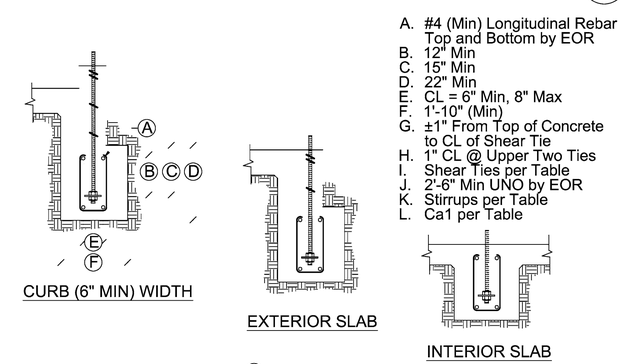

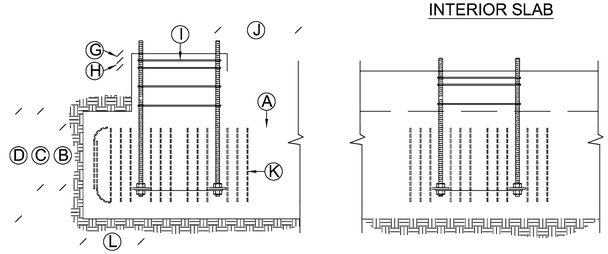

RA SECTIONS & ELEVATIONS

2B

UNREINFORCED ANCHORAGE (UA)

Model	Panel Height	Anchorage[1]	Rod Dia (in)	Rod[2,3] Grade	UA le[4] (in)	UA Ca1[5] & Ca2[6] (in)	Shear[7,8] Ties
HFX-9x	79.5" - 8'	1-1/8-STD-13-19	1-1/8	STD	13	19	1 - # 3
HFX-12x	78" - 10'	1-1/8-HS-20-30		HS	20	30	
HFX-15x, 18x	78" - 13'	1-1/8-STD-14-20		STD	14	20	
HFX-15x, 18x Balloon	14' - 20'	1-1/8-HS-20-30		HS	20	30	
HFX-21x, 24x	78" - 13'	1-1/8-STD-14-20		STD	14	20	2 - # 3
		1-1/8-HS-23-34			23	34	
HFX-21x, 24x Balloon	14' - 20'	1-1/8-HS-20-30		HS	20	30	

UNREINFORCED ANCHORAGE NOMENCLATURE

1-1/8 - STD - 14 - 20
- END & EDGE DISTANCE (C_{a1} & C_{a2})
- EMBEDMENT DEPTH (l_e)
- ROD GRADE
- ROD DIAMETER

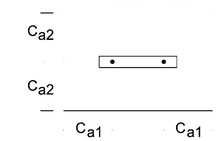

1

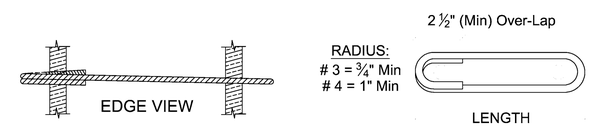

SHEAR TIES NOT REQUIRED WHEN

Model	Length	End Distance ≥	Edge Distance ≥
HFX-9x	7-1/2"	2-3/8"	2-3/8"
HFX-12x	10-1/2"	6-1/4"	3-1/2"
HFX-15x	12"	7-3/8"	4-1/4"
HFX-18x	15"	8-3/8"	5"
HFX-21x	18"	9-3/8"	5-1/2"
HFX-24x	21"	10-3/8"	6"

UA SHEAR TIES

1A

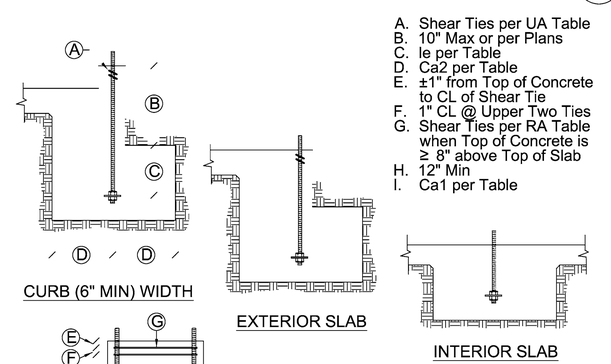

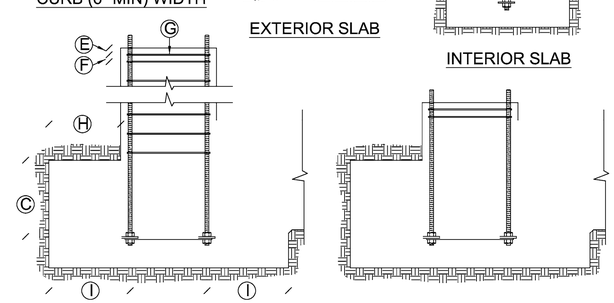

UA SECTIONS & ELEVATIONS

1B

1. DESIGNS ARE TO RESIST LOADING PER ACI 318-19, SEC 17.10.5.3.
2. STD INDICATES ANCHORS COMPLYING WITH ASTM F1554 GRADE 36 WITH A HARDY FRAME BOLT BRACE (HFXBB) INSTALLED WITH STD OR GRADE 8 DOUBLE NUTS ON THE EMBED END.
3. HS INDICATES ANCHORS COMPLYING WITH ASTM A193 GRADE B7 WITH A 1/2"x3"x3"(MIN) HFPW PLATE WASHER INSTALLED WITH DOUBLE NUTS ON THE EMBED END (HFXBB NOT REQUIRED).
4. LE = LENGTH OF EMBEDMENT FROM THE TOP OF FOOTING OR GRADE BEAM TO THE TOP OF THE HFXBB BOLT BRACE (TOP OF THE EMBEDDED HFPW PLATE WASHER @ HS ANCHORS)
5. CA1 = DISTANCE FROM HD CENTERLINE TO THE END OF THE FOOTING OR GRADE BEAM.
6. CA2 = DISTANCE FROM HD CENTERLINE TO BOTH THE FRONT AND THE BACK FACE OF THE FOOTING OR GRADE BEAM.
7. SHEAR TIES ARE GRADE 60 (MIN) REBAR AND REQUIRED FOR NEAR EDGE DISTANCE CONDITIONS PER ACI 318-19, F'C = 2,500 PSI. CURBS AND STEM WALLS MUST BE 6 INCH (MIN) WIDTH FOR UA AND RA, 12 INCH (MIN) WIDTH FOR BB-RA.
8. FOR UA APPLICATIONS, ADDITIONAL TIES MAY BE REQUIRED AT STEM WALLS. SHEAR TIES ARE NOT REQUIRED FOR INSTALLATION AWAY FROM EDGE (SEE DETAIL 1A), INSTALLATION ON WOOD FRAMING, OR FOR IRC BRACED WALL PANEL APPLICATIONS.
9. STIRRUPS ARE GRADE 60 (MIN) REBAR. SEE TABLE FOR SIZE AND SPACING. SEE "STIRRUP LAYOUT" DIAGRAMS AND "KEY" FOR LAYOUT PATTERNS.
10. CONCRETE EDGE DISTANCES MUST COMPLY WITH ACI 318-19, SECTION 17.9.2. COATED REINFORCEMENT MAY BE SPECIFIED BY THE EOR TO LIMIT EXPOSURE AND THEREFORE REDUCE MINIMUM CONCRETE COVER. COATED REINFORCEMENT MUST COMPLY WITH ACI 318-19, SECTION 20.5.2.

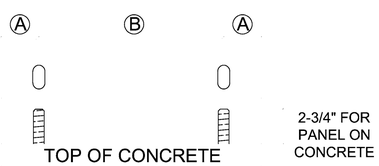

Model	Width	A	B
HFX-9x	9"	1-3/4"	5-1/2"
HFX-12x	12"		8-1/2"
HFX-15x	15"		9-3/4"
HFX-18x	18"	2-5/8"	12-3/4"
HFX-21x	21"		15-3/4"
HFX-24x	24"		18-3/4"

HFX ANCHOR CENTERLINES

A

IMPORTANT!

1. ANCHORAGE IS DESIGNED FOR TENSION AND SHEAR TRANSFER ONLY, FOUNDATION DESIGN PER EOR.
2. REINFORCEMENT SHOWN IS THE MINIMUM REQUIREMENT AND IS NOT INTENDED TO REPLACE REINFORCEMENT DESIGNED BY THE EOR.
3. FOR RA AND BB-RA INSTALLATIONS, THE HFXBB BOLT BRACE MAY BE PLACED ON TOP OF THE STIRRUPS WITH DOUBLE-NUTS INSTALLED AT EMBED END OF STANDARD GRADE ANCHOR RODS. (NOTE: ½" x 3" x 3" MIN. HFPW PLATE WASHERS ARE REQUIRED TO BE DOUBLE-NUTTED AT EMBED END OF HIGH STRENGTH ANCHOR RODS.)
4. HIGH STRENGTH ALL-THREAD RODS PROVIDED BY HARDY FRAMES ARE STAMPED ON BOTH ENDS. (HF B7)

IMPORTANT NOTES

B

REVISIONS	DATE

ANCHORAGE DETAILS - HFX PANELS

THIS DETAIL SHEET IS NOT PROPRIETARY AND IS NOT REQUIRED FOR PLAN SUBMITTAL WITH *HARDY FRAME* PRODUCTS

MiTek®
HARDY FRAME SHEAR WALL SYSTEMS
16023 SWINGLEY RIDGE RD
CHESTERFIELD, MO 63017
(800) 325-8075
WWW.HARDYFRAME.COM

DATE:
1-1-2023

HFX1

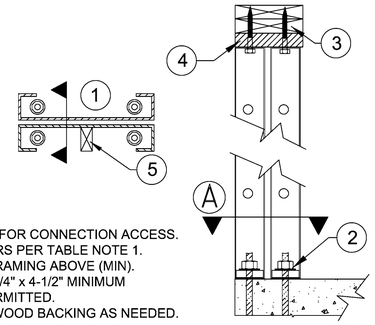

1. CAVITY ORIENTED FOR CONNECTION ACCESS.
2. NUTS AND WASHERS PER TABLE NOTE 1.
3. NOMINAL 8 INCH FRAMING ABOVE (MIN).
4. A 2x FILLER WITH 1/4" x 4-1/2" MINIMUM WS SCREWS IS PERMITTED.
5. FIELD INSTALLED WOOD BACKING AS NEEDED.

BACK TO BACK INSTALLATION 3

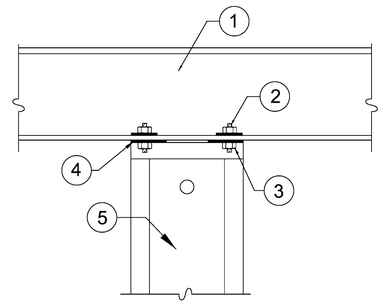

1. STEEL BEAM PER PLANS
2. ALL THREAD RODS THRU-BOLTED TO STEEL BEAM BY BUILDING DESIGN PROFESSIONAL.
3. NUTS AND WASHERS PER TABLE NOTE 1.
4. *HARDY FRAME*® STACKING WASHERS (HFSW) REQUIRED TO BE WELDED INSIDE TOP CHANNEL OF LOWER PANEL.
5. *HARDY FRAME*® "STK" PANEL WITH STACKING WASHERS WELDED INSIDE THE TOP CHANNEL BY MANUFACTURER.

STEEL BEAM ABOVE THRU-BOLT 2

NOTE:
ATTACHMENTS TO ADJACENT TRIMMERS MAY BE MADE AT PREPUNCHED SCREW HOLES OR WITH SELF TAPPING SCREWS (#12 AT EDGES, #10 AT FACE).

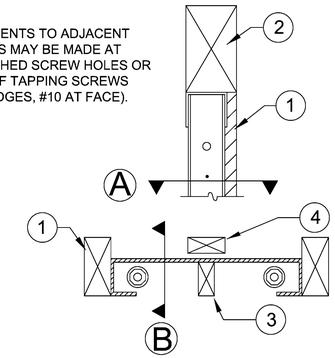

1. TRIMMERS PROVIDE FULL BEARING FOR HEADER ABOVE, DESIGN AND CONNECTIONS BY BUILDING DESIGN PROFESSIONAL.
2. 6x HEADER.
3. WOOD MEMBERS FOR BACKING MAY BE INSERTED VERTICALLY OR HORIZONTALLY IN THE PANEL CAVITY AS NEEDED.
4. WOOD MEMBER FLUSH TO FACE OF WALL FOR BACKING AS NEEDED.

6x HEADER ABOVE-SECTIONS 1

HFX PANELS 78 IN. THROUGH NOMINAL 13 FEET

Model Number	Net Height (in)	Depth (in)	Hold Down Diameter[1] (in)	Top Screw Qty[2] (ea)	Screw Qty Available at Edges (ea)[3]
HFX-12,15,18,21 & 24x78	78	3-1/2	1-1/8	9" Width = 5	4
HFX-9x79.5	79-1/2			12" Width = 6	
HFX-12,15,18,21 & 24x8	92-1/4			15" Width = 8	
HFX-9x8	93-3/4				
HFX-12,15,18,21 & 24x9	104-1/4			18" Width = 10	
HFX-12,15,18,21 & 24x10	116-1/4				5
HFX-15,18,21 & 24x11	128-1/4			21" Width = 12	
HFX-15,18,21 & 24x12	140-1/4				6
HFX-15,18,21 & 24x13	152-1/4			24" Width = 14	

BALLOON PANELS 14 FEET THROUGH 20 FEET

Model Number	Net Height (in)	Depth (in)	Hold Down Diameter[1] (in)	Top Screw Qty[2] (ea)	Screw Qty Available at Edges (ea)[3]
HFX-15,18,21 & 24x14	164-1/4	3-1/2	1-1/8	15" Width = 8	6
HFX-15,18,21 & 24x15	176-1/4				
HFX-15,18,21 & 24x16	188-1/4			18" Width = 10	
HFX-15,18,21 & 24x17	200-1/4				7
HFX-15,18,21 & 24x18	212-1/4			21" Width = 12	
HFX-15,18,21 & 24x19	224-1/4				8
HFX-15,18,21 & 24x20	236-1/4			24" Width = 14	

TABLE NOTES
1. FOR STD OR HS GRADE HOLD DOWN ANCHOR BOLTS CONNECT TO THE PANEL BASE WITH HARDENED ROUND WASHERS BELOW GRADE 8 NUTS. ALTERNATE WASHERS ARE (2 EA) ROUND-FLAT OR (2 EA) SAE WASHERS ON EACH BOLT. ALTERNATE NUTS ARE 2H HEAVY HEX.
2. 1/4" DIAMETER MITEK®PRO SERIES™ WS SCREWS. LENGTH IS 3" (MINIMUM) WHEN ATTACHED DIRECTLY TO THE COLLECTOR AND 4-1/2" (MINIMUM) WHEN INSTALLING A 2x FILLER ABOVE THE PANEL.
3. ADJACENT FRAMING WITH 1/4" DIAMETER SCREWS IS REQUIRED AT THE PANEL EDGES WHEN INSTALLING A FILLER ABOVE THE TOP CHANNEL THAT IS GREATER THAN 1-1/2" OR WHEN SPECIFIED BY THE DESIGN PROFESSIONAL.

A

ALTERNATE:

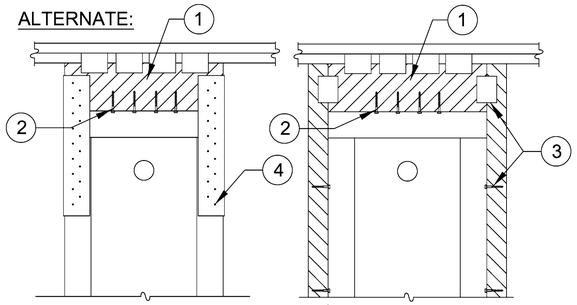

1. WOOD FILLER (13 3/8" MAX DEPTH) WITH USP MP4F CONNECTORS BOTH SIDES, QUANTITY BY BUILDING DESIGN PROFESSIONAL.
2. 1/4" x 3" (MINIMUM) WS SCREWS, QUANTITY PER TABLES
3. ADJACENT FRAMING WITH 1/4" DIAMETER SCREWS INSTALLED THROUGH PRE-PUNCHED HOLES IN PANEL EDGES REQ'D WHEN INSTALLING A FILLER GREATER THAN 1-1/2" ABOVE TO BRACE OUT-OF-PLANE HINGE OR WHEN SPECIFIED BY THE DESIGN PROFESSIONAL.
4. MiTek HFFB FILLER BRACE WITH 1/4" x 1-1/2" WS SCREWS TO FILLER (FILL ALL HOLES) AND 1/4" SELF-TAPPING SCREWS TO PANEL (5 MIN. EACH FACE) REQ'D WHEN INSTALLING A FILLER GREATER THAN 3-1/4" ABOVE TO BRACE OUT-OF-PLANE HINGE OR WHEN SPECIFIED BY THE BUILDING DESIGN PROFESSIONAL.

FILLER GREATER THAN 1-1/2 IN. 6

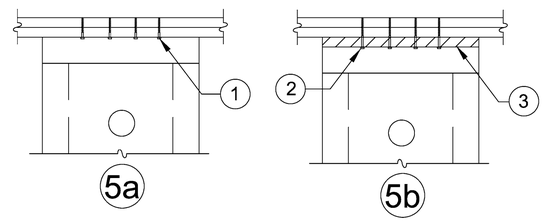

1. 1/4" x 3" (MINIMUM) WS SCREWS, QUANTITY PER TABLES
2. 1/4" x 4-1/2" (MINIMUM) WS SCREWS, QUANTITY PER TABLES
3. 2x WOOD FILLER.

TOP PLATE CONNECTIONS 5

NOTE:
TO PREVENT DRILLING ADDITIONAL HOLES ORIENT THE PANEL CAVITY TOWARD THE FIXTURE BEING INSTALLED.

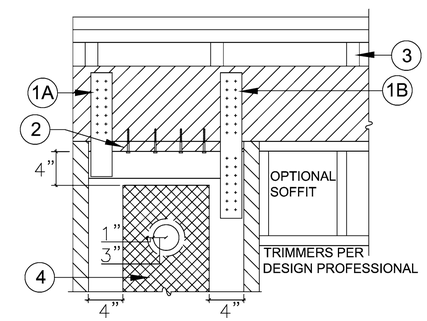

1. (A) PRE-WELDED STRAPS ARE PROVIDED ON 78" AND 79-1/2" PANEL HEIGHTS. THEY ARE AVAILABLE FOR OTHER HEIGHTS UPON REQUEST.
   (B) FIELD INSTALLED STRAPS WITH SELF TAPPING SCREWS ARE PERMITTED. THE DESIGN AND CONNECTION IS BY THE DESIGN PROFESSIONAL.
2. A 2x WOOD FILLER WITH 1/4"x4-1/2" (MIN.) WS SCREWS IS PERMITTED.
3. WHEN CRIPPLE STUDS OCCUR, SHEAR TRANSFER DESIGN TO BE PER THE BUILDING DESIGN PROFESSIONAL.
4. A 1" DIA. HOLE MAY BE ADDED IN THE PANEL FACE WHEN IT IS LOCATED IN THE UPPER HALF OF THE PANEL HEIGHT AND IS 4" MINIMUM FROM ANY EDGE. FOR PANELS MORE THAN 12" WIDE, ADDITIONAL HOLES MUST BE OFFSET 1" MINIMUM FROM THE 3" DIA. PREPUNCHED HOLE. FOR HOLES LARGER THAN 1" DIAMETER OR TO ADD MORE THAN ONE HOLE CONTACT MITEK HARDY FRAME TECHNICAL SUPPORT AT (800) 754-3030.

TOP CONNECTION TO HEADER 4

INSTALLATION INSTRUCTIONS
1. WHEN INSTALLING ON CONCRETE CONNECT WITH (1 EA) HARDENED ROUND WASHER BELOW (1 EA) GRADE 8 NUT, SECURE WITH A DEEP SOCKET (RECOMMENDED) UNTIL SNUG TIGHT. ALTERNATE WASHERS AND NUTS ARE PROVIDED IN TABLE NOTE 1.
2. INSTALLATION ON CONCRETE PROVIDES THE HIGHEST ALLOWABLE VALUES. CONFIRM WITH THE DESIGN PROFESSIONAL BEFORE INSTALLING ON OTHER SUPPORTING SURFACES.
3. USE 1/4"X4-1/2" MITEK® PRO SERIES™ WS SCREWS AT TOP CONNECTIONS WITH A 2x FILLER. IF THE TOP OF PANEL IS IN DIRECT CONTACT WITH THE COLLECTOR ABOVE (TOP PLATES, HEADER, BEAM, ETC.) USE1/4 x 3" (MIN)
4. FOR INSTALLATIONS WITH A FILLER GREATER THAN 1-1/2" ABOVE, OR WHEN SPECIFIED BY THE DESIGN PROFESSIONAL, ADJACENT KING POSTS TO BRACE THE OUT-OF-PLANE HINGE CAN BE CONNECTED WITH 1/4" DIA. SCREWS THROUGH PRE-PUNCHED HOLES AT THE PANEL EDGES.

B

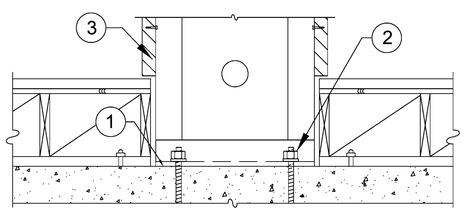

1. 15# FELT OR EQUIVALENT MOISTURE BARRIER RECOMMENDED BETWEEN PANEL BASE AND CONCRETE.
2. NUTS AND WASHERS PER TABLE NOTE 1.
3. ADJACENT FRAMING WITH 1/4" DIAMETER SCREWS INSTALLED AT THE PANEL EDGES WHEN INSTALLING A FILLER GREATER THAN 1-1/2" ABOVE OR WHEN SPECIFIED BY DESIGN PROFESSIONAL.

RAISED FLOOR HEAD-OUT 8

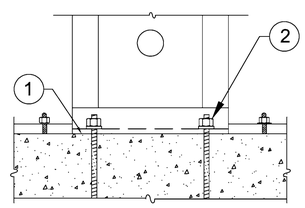

1. 15# FELT OR EQUIVALENT MOISTURE BARRIER RECOMMENDED BETWEEN PANEL BASE AND CONCRETE.
2. NUTS AND WASHERS PER TABLE NOTE 1.

INSTALLATION ON CONCRETE 7

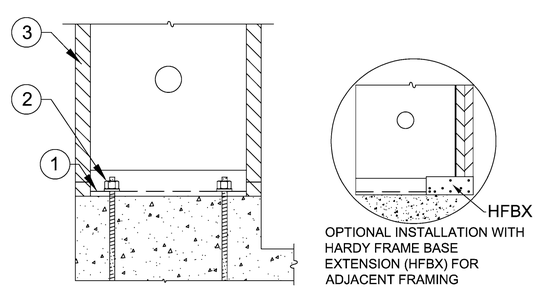

1. 15# FELT OR EQUIVALENT MOISTURE BARRIER RECOMMENDED BETWEEN PANEL BASE AND CONCRETE.
2. NUTS AND WASHERS PER TABLE NOTE 1.
3. ADJACENT FRAMING OPTIONAL U.N.O. BY BUILDING DESIGN PROFESSIONAL.

INSTALLATION ON CURB 9

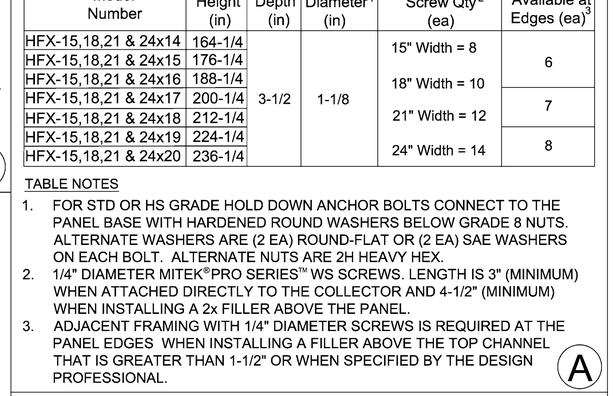

C

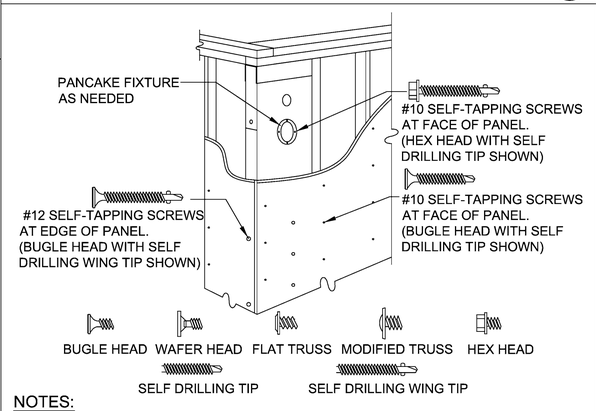

NOTES:
A. SURFACE FINISHES, CONNECTORS AND FIXTURES ARE ATTACHED TO THE PANEL FACE WITH # 10 SELF-TAPPING SCREWS SPACED NO LESS THAN 2-1/4" OC.
B. ATTACHMENTS TO THE PANEL EDGES ARE MADE WITH # 12 SELF-TAPPING SCREWS.
C. STRUCTURAL CONNECTIONS ARE TO BE DESIGNED BY THE DESIGN PROFESSIONAL.
D. STRUCTURAL HARDWARE USED TO TRANSFER LOADS SHOULD NOT EXCEED 12 GAUGE.

D

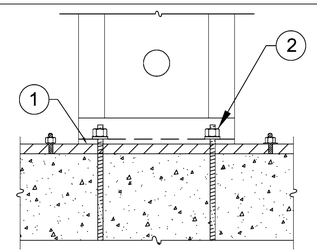

ALLOWABLE VALUES ON 2x PLATE ARE LESS THAN INSTALLATION ON CONCRETE

1. 15# FELT OR EQUIVALENT MOISTURE BARRIER RECOMMENDED BETWEEN PANEL BASE AND TREATED PLATE.
2. NUTS AND WASHERS PER TABLE NOTE 1.

INSTALLATION ON 2x PLATE 11

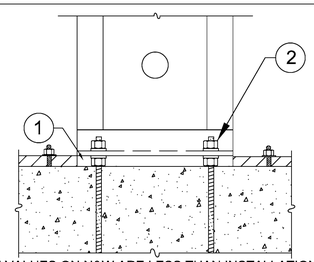

ALLOWABLE VALUES ON N&W ARE LESS THAN INSTALLATION ON CONCRETE

1. PLUS OR MINUS 1-1/2" GAP TO BE FILLED WITH 5,000 PSI NON-SHRINK GROUT (MINIMUM).
2. NUT AND WASHER GRADES PER TABLE NOTE 1.

INSTALLATION ON NUTS & WASHERS 10

REVISIONS	DATE

FRAMING DETAILS - HFX PANELS

THIS DETAIL SHEET IS NOT PROPRIETARY AND IS NOT REQUIRED FOR PLAN SUBMITTAL WITH MITEK® *HARDY FRAME*® PRODUCTS

MiTek®
HARDY FRAME SHEAR WALL SYSTEMS
16023 SWINGLEY RIDGE RD
CHESTERFIELD, MO 63017
(800) 325-8075
WWW.HARDYFRAME.COM

DATE:
1-1-2023

HFX2

NOTES:
A. INSTALLATION WITHOUT *HARDY FRAME*® BEARING PLATE (HFXBP) MAY INCREASE DEFLECTION AND RESULT IN A DECREASE OF ALLOWABLE SHEAR VALUE, BUILDING DESIGN PROFESSIONAL MUST ANALYZE EFFECTS
B. COUPLERS MAY BE USED WHEN THREADED ROD IS SUBJECT TO TENSION LOADS ONLY.

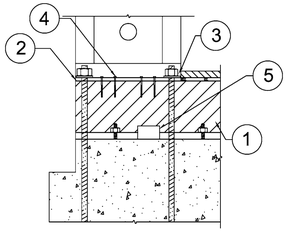

1. 4x (MIN) RIM, ALLOWABLE VALUE TABLES ASSUME ENGINEERED WOOD PRODUCT.
2. NOTCH FLOOR SHEATHING THEN INSTALL *HARDY FRAME*® PANEL DIRECTLY ON RIM.
3. NUTS AND WASHERS PER TABLE NOTE 1.
4. 1/4" x 4-1/2" (MINIMUM) WS SCREWS THROUGH BOTTOM OF PANEL MINIMUM QUANTITY PER TABLE.
5. USP MP4F CONNECTORS, QUANTITY BY BUILDING DESIGN PROFESSIONAL.

RAISED-OS CORNER (4)

NOTE:
COUPLERS MAY BE USED WHEN THREADED ROD IS SUBJECT TO TENSION LOADS ONLY.

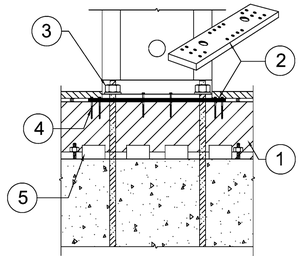

1. 4x (MIN) RIM, ALLOWABLE VALUE TABLES ASSUME ENGINEERED WOOD PRODUCT.
2. NOTCH FLOOR SHEATHING THEN INSTALL *HARDY FRAME*® BEARING PLATE (HFXBP) AND PANEL PER INSTALLATION NOTES 3-6, DETAIL B/HFX3.
3. NUTS AND WASHERS PER TABLE NOTE 1.
4. 1/4" x 4-1/2" (MIN) WS SCREWS, QUANTITY PER TABLE.
5. USP MP4F CONNECTORS, QUANTITY BY BUILDING DESIGN PROFESSIONAL.

RAISED BEARING PLATE (3)

NOTES:
A. CHECK WALL HEIGHT, *HARDY FRAME*® BEARING PLATES BELOW THE PANEL BASE OR CUSTOM HEIGHT PANELS ARE AVAILABLE TO AVOID FILLERS GREATER THAN 1-1/2".
B. FOR MAXIMUM ALLOWABLE VALUES INSTALL PANEL ON CONCRETE

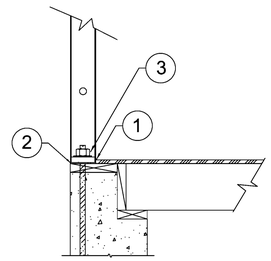

1. FLOOR SHEATHING NOTCHED, INSTALL PANEL ON WOOD PLATE.
2. 15# FELT OR EQUIVALENT RECOMMENDED BETWEEN PANEL BASE AND TREATED MUDSILL.
3. NUTS AND WASHERS PER TABLE NOTE 1.

RAISED STEM WALL (2)

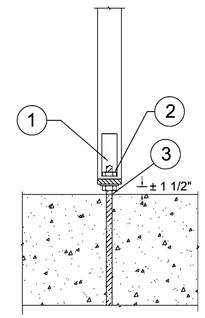

1. ACCESS HOLE LOCATED AT EDGE OF POST.
2. NUTS AND WASHERS PER TABLE NOTE 1.
3. PLUS OR MINUS 1-1/2" GAP TO BE FILLED WITH 5,000 PSI STRENGTH NON-SHRINK GROUT (MIN).

POST ON N&W (1)

Model Number	Net Height (in)	Depth (in)	Hold Down Diameter[1] (in)	Screw Quantity: Panel	Screw Quantity: Top[2] (ea)	Screw Quantity: Bott[3] (ea)	Screw Qty[4] Available at Edges (ea)
HFX-12,15,18,21 & 24x8	92-1/4	3-1/2	1-1/8	12" Width	6	6	4
HFX-12,15,18,21 & 24x9	104-1/4			15" Width	8	8	
HFX-12,15,18,21 & 24x10	116-1/4			18" Width	10	10	5
HFX-15,18,21 & 24x11	128-1/4			21" Width	12	12	
HFX-15,18,21 & 24x12	140-1/4			24" Width	14	14	6
HFX-15,18,21 & 24x13	152-1/4						

NOTE: *HARDY FRAME*® STACKING WASHERS (HFSW) ARE REQUIRED IN THE TOP OF PANELS WHEN CONNECTING TO TENSION ANCHORS FROM ABOVE. *HARDY FRAME*® "STK PANELS" INCLUDE HFSW WASHERS PRE-WELDED IN THE TOP CHANNEL.

1. HOLD DOWN TENSION ANCHORS SPECIFIED AS STANDARD GRADE (STD) MUST COMPLY WITH ASTM F1554 GRADE 36 (OR EQUAL). HOLD DOWN TENSION ANCHORS SPECIFIED AS HIGH STRENGTH (HS) MUST COMPLY WITH ASTM A 193 GRADE B7 (OR EQUAL). TENSION ANCHORS (BOTH GRADES) CONNECT TO THE UPPER AND LOWER PANELS WITH HARDENED ROUND WASHERS AND GRADE 8 NUTS. A *HARDY FRAME*®'HFSW" STACKING WASHER IS REQUIRED IN THE TOP CHANNEL OF THE LOWER PANEL (AVAILABLE PRE-WELDED IN A *HARDY FRAME*®"STK" PANEL). ALTERNATE WASHERS ARE (2 EA) ROUND-FLAT OR (2 EA) SAE WASHERS AT EACH ANCHOR CONNECTION. ALTERNATE NUTS ARE 2H HEAVY HEX.
2. 1/4" DIAMETER MITEK®PRO SERIES™ WS SCREWS. LENGTH IS 3" (MINIMUM) WHEN ATTACHING DIRECTLY TO THE COLLECTOR AND 4-1/2" (MINIMUM) WHEN INSTALLING A 2x FILLER ABOVE THE PANEL.
3. 1/4" DIAMETER MITEK®PRO SERIES™ WS SCREWS. LENGTH IS 4-1/2" (MINIMUM) AT CONNECTIONS TO FLOOR SYSTEMS AND BEAMS BELOW.
4. 1/4" DIAMETER SCREWS ARE REQUIRED AT THE EDGES WHEN INSTALLING A FILLER GREATER THAN 1-1/2 INCH ABOVE OR WHEN SPECIFIED BY THE DESIGN PROFESSIONAL.

(A)

INSTALLATION ON FLOOR SYSTEMS WITH *HARDY FRAME*® BEARING PLATE (HFXBP)

1. WITH HOLES PRE-DRILLED FOR 1-1/8" DIA.TENSION ANCHORS, INSTALL A SOLID 4x (MINIMUM) RIM IN FLOOR SYSTEM AT PANEL LOCATION. ALLOWABLE VALUE TABLES ASSUME THE RIM IS ENGINEERED WOOD PRODUCT (EWP).
2. NOTCH FLOOR SHEATHING THEN INSTALL HFXBP ON RIM WITH 6 EACH 1/4"X4-1/2" (MIN) "WS" SCREWS AT EACH END.
3. PLACE PANEL ON HFXBP.
4. WHEN STACKING PANELS, INSTALL "HFSW" STACKING WASHERS IN THE TOP CHANNEL OF THE LOWER PANEL. CONNECT LOWER TO UPPER PANELS WITH TENSION ANCHORS (GRADE PER PLANS) AND SECURE AT BOTH ENDS WITH HARDENED ROUND WASHERS AND GRADE 8 NUTS TO BE SNUG TIGHT. *HARDY FRAME* "STK" PANELS THAT INCLUDE "HFSW" STACKING WASHERS PRE-WELDED IN THE TOP CHANNEL ARE AVAILABLE,
5. WHEN MORE THAN 12 SCREWS ARE REQUIRED FOR THE BOTTOM CONNECTION OR JOINTS IN FRAMING MEMBERS OCCUR AT SCREW LOCATIONS, INSTALL ADDITIONAL 1/4"x4-1/2" WS SCREWS THROUGH THE BASE OF PANEL WHERE THEY ALIGN WITH HOLES IN THE HFXBP.
6. FOR STANDARD WALL HEIGHTS, INSTALL A 2x FILLER ABOVE PANEL (DTL 5/HFX2). FOR FILLERS GREATER THAN 1-1/2 IN. SEE DETAIL 6/HFX2.

NOTE: INSTALLATIONS MAY VARY WITH JOB SPECIFIC CONDITIONS AND/OR SPECIFICATIONS BY THE BUILDING DESIGN PROFESSIONAL.

(B)

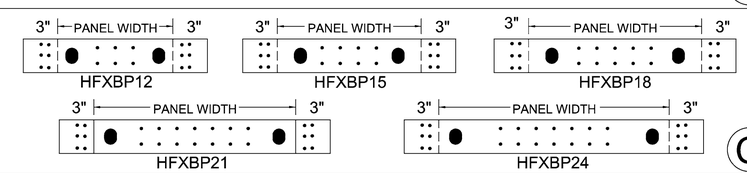

(C)

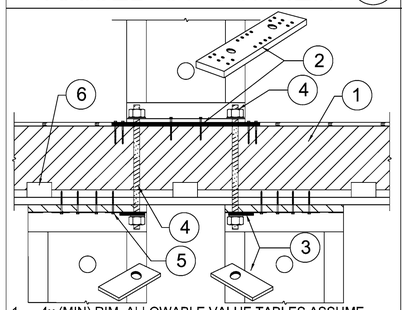

1. 4x (MIN) RIM, ALLOWABLE VALUE TABLES ASSUME ENGINEERED WOOD PRODUCT.
2. NOTCH FLOOR SHEATHING THEN INSTALL *HARDY FRAME*® BEARING PLATE (HFXBP) AND PANEL PER INSTALLATION NOTES 3-6, DETAIL B/HFX3.
3. *HARDY FRAME*® STACKING WASHER (HFSW) AT TOP OF PANEL REQUIRED WHEN CONNECTING TO TENSION ANCHOR FROM ABOVE.
4. 1-1/8" DIA. HOLD DOWN, HFSW AND N&W PER TABLE NOTE 1 ARE PROVIDED IN *HARDY FRAME*® HFTC KIT.
5. 1/4" x 4-1/2" (MIN) WS SCREWS, QUANTITY PER TABLE.
6. USP MP4F CONNECTORS, QUANTITY BY BUILDING DESIGN PROFESSIONAL.

PYRAMID STACK (8)

NOTE:
INSTALLATION WITHOUT *HARDY FRAME*® BEARING PLATE (HFXBP) MAY INCREASE DEFLECTION AND RESULT IN A DECREASE OF ALLOWABLE SHEAR VALUE, BUILDING DESIGN PROFESSIONAL MUST ANALYZE EFFECTS.

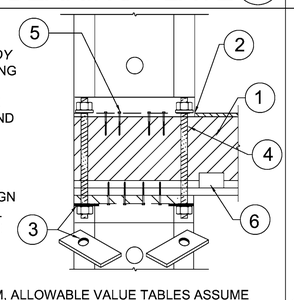

1. 4x (MIN) RIM, ALLOWABLE VALUE TABLES ASSUME ENGINEERED WOOD PRODUCT.
2. NOTCH FLOOR SHEATHING THEN INSTALL *HARDY FRAME*® PANEL DIRECTLY ON RIM.
3. *HARDY FRAME*® STACKING WASHER (HFSW) AT TOP OF PANEL REQUIRED WHEN CONNECTING TO TENSION ANCHOR FROM ABOVE.
4. 1-1/8" DIA. HOLD DOWN, HFSW AND N&W PER TABLE NOTE 1 ARE PROVIDED IN *HARDY FRAME*® HFTC KIT.
5. 1/4" x 4-1/2" (MIN) WS SCREWS, QUANTITY PER TABLE.
6. USP MP4F CONNECTORS, QUANTITY BY BUILDING DESIGN PROFESSIONAL.

STACK @ OS CORNER (7)

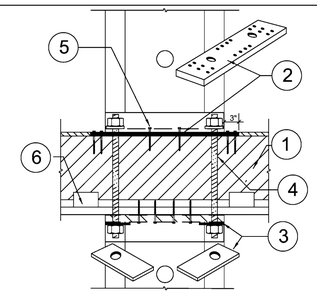

1. 4x (MIN) RIM, ALLOWABLE VALUE TABLES ASSUME ENGINEERED WOOD PRODUCT.
2. NOTCH FLOOR SHEATHING THEN INSTALL *HARDY FRAME*® BEARING PLATE (HFXBP) AND PANEL PER INSTALLATION NOTES 3-6, DETAIL B/HFX3.
3. *HARDY FRAME*® STACKING WASHER (HFSW) AT TOP OF PANEL REQUIRED WHEN CONNECTING TO TENSION ANCHOR FROM ABOVE.
4. 1-1/8" DIA. HOLD DOWN, HFSW AND N&W PER TABLE NOTE 1 ARE PROVIDED IN *HARDY FRAME*® HFTC KIT.
5. 1/4" x 4-1/2" (MIN) WS SCREWS, QUANTITY PER TABLE.
6. USP MP4F CONNECTORS, QUANTITY BY BUILDING DESIGN PROFESSIONAL.

STRAIGHT STACK (6)

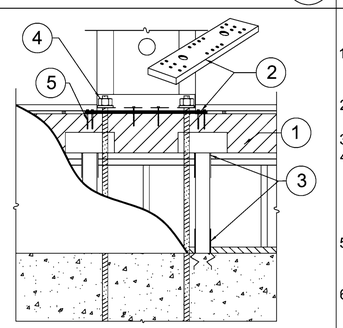

1. 4x (MIN) RIM, ALLOWABLE VALUE TABLES ASSUME ENGINEERED WOOD PRODUCT.
2. NOTCH FLOOR SHEATHING THEN INSTALL *HARDY FRAME*® BEARING PLATE (HFXBP) AND PANEL PER INSTALLATION NOTES 3-6, DETAIL B/HFX3.
3. USP POST CAP AND POST BASE BY THE BUILDING DESIGN PROFESSIONAL.
4. NUTS AND WASHERS PER TABLE NOTE 1.
5. 1/4" x 4-1/2" (MIN) WS SCREWS, QUANTITY PER TABLE.

CRIPPLE WALL (5)

LOAD PATH FROM BEAM TO FOUNDATION AND CHECK THAT PANEL DRIFT IS WITHIN CODE LIMIT BY BUILDING DESIGN PROFESSIONAL.

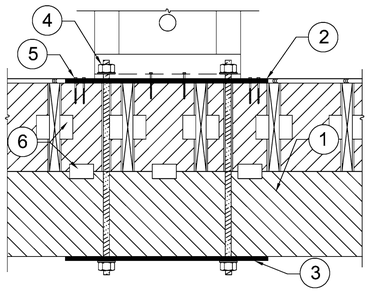

1. DROP BEAM WITH FLOOR JOIST ABOVE PER PLAN.
2. NOTCH FLOOR SHEATHING THEN INSTALL *HARDY FRAME*® BEARING PLATE (HFXBP) AND PANEL PER INSTALLATION NOTES 3-6, DETAIL B/HFX3.
3. *HARDY FRAME*® BEARING PLATE (HFXBP) OR BEARING PLATE WASHER AT UNDERSIDE OF BEAM SIZED PER BUILDING DESIGN PROFESSIONAL TO LIMIT CRUSHING FROM TENSION ANCHOR FORCES.
4. NUTS AND WASHERS PER TABLE NOTE 1.
5. 1/4" x 4-1/2" (MIN) WS SCREWS, QUANTITY PER TABLE.
6. USP CONNECTORS BY DESIGN PROFESSIONAL

DROP BM - FL SYSTEM (14)

LOAD PATH FROM BEAM TO FOUNDATION AND CHECK THAT PANEL DRIFT IS WITHIN CODE LIMIT BY BUILDING DESIGN PROFESSIONAL.

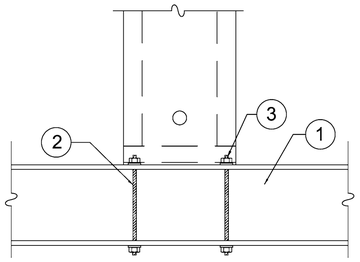

1. STEEL BEAM PER PLANS
2. HOLD DOWN ALL THREAD RODS THRU-BOLTED TO BOTTOM FLANGE OF STEEL BEAM BY BUILDING DESIGN PROFESSIONAL.
3. NUTS AND WASHERS AT PANEL BASE PER TABLE NOTE 1

STEEL BM THRU-BOLT (13)

LOAD PATH FROM BEAM TO FOUNDATION AND CHECK THAT PANEL DRIFT IS WITHIN CODE LIMIT BY BUILDING DESIGN PROFESSIONAL.

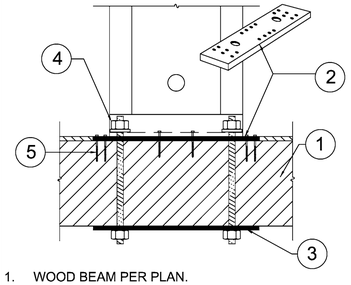

1. WOOD BEAM PER PLAN.
2. NOTCH FLOOR SHEATHING THEN INSTALL *HARDY FRAME*® BEARING PLATE (HFXBP) AND PANEL PER INSTALLATION NOTES 3-6, DETAIL B/HFX3.
3. *HARDY FRAME*® BEARING PLATE (HFXBP) OR BEARING PLATE WASHER AT UNDERSIDE OF BEAM SIZED PER BUILDING DESIGN PROFESSIONAL TO LIMIT CRUSHING FROM TENSION ANCHOR FORCES.
4. 1-1/8" DIA. HOLD DOWN, HFSW AND N&W PER TABLE NOTE 1 ARE PROVIDED IN *HARDY FRAME*® HFTC KIT.
5. 1/4" x 4-1/2" (MIN) WS SCREWS, QUANTITY PER TABLE.

WOOD BM THRU-BOLT (12)

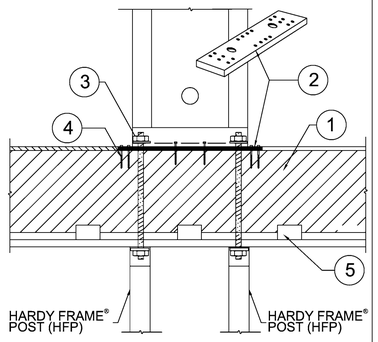

1. 4x (MIN) RIM, ALLOWABLE VALUE TABLES ASSUME ENGINEERED WOOD PRODUCT.
2. NOTCH FLOOR SHEATHING THEN INSTALL *HARDY FRAME*® BEARING PLATE (HFXBP) AND PANEL PER INSTALLATION NOTES 3-6, DETAIL B/HFX3.
3. 1-1/8" DIA. HOLD DOWN, HFSW AND N&W PER TABLE NOTE 1 ARE PROVIDED IN *HARDY FRAME*® HFTC KIT.
4. 1/4" x 4-1/2" (MIN) WS SCREWS, QUANTITY PER TABLE.
5. USP MP4F CONNECTORS, QUANTITY BY BUILDING DESIGN PROFESSIONAL.

HFP POSTS BELOW (11)

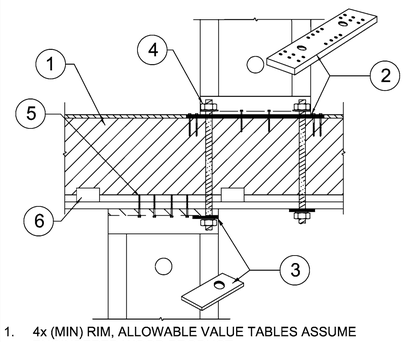

1. 4x (MIN) RIM, ALLOWABLE VALUE TABLES ASSUME ENGINEERED WOOD PRODUCT.
2. NOTCH FLOOR SHEATHING THEN INSTALL *HARDY FRAME*® BEARING PLATE (HFXBP) AND PANEL PER INSTALLATION NOTES 3-6, DETAIL B/HFX3.
3. *HARDY FRAME*® STACKING WASHER (HFSW) AT TOP OF PANEL REQUIRED WHEN CONNECTING TO TENSION ANCHOR FROM ABOVE.
4. 1-1/8" DIA. HOLD DOWN, HFSW AND N&W PER TABLE NOTE 1 ARE PROVIDED IN *HARDY FRAME*® HFTC KIT.
5. 1/4" x 4-1/2" (MIN) WS SCREWS, QUANTITY PER TABLE.
6. USP MP4F CONNECTORS, QUANTITY BY BUILDING DESIGN PROFESSIONAL.

STAGGERED THRU-BOLT (10)

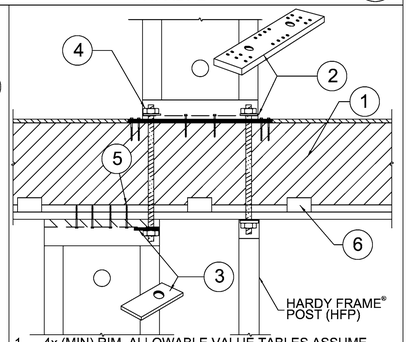

1. 4x (MIN) RIM, ALLOWABLE VALUE TABLES ASSUME ENGINEERED WOOD PRODUCT.
2. NOTCH FLOOR SHEATHING THEN INSTALL *HARDY FRAME*® BEARING PLATE (HFXBP) AND PANEL PER INSTALLATION NOTES 3-6, DETAIL B/HFX3.
3. *HARDY FRAME*® STACKING WASHER (HFSW) AT TOP OF PANEL REQUIRED WHEN CONNECTING TO TENSION ANCHOR FROM ABOVE.
4. 1-1/8" DIA. HOLD DOWN, HFSW AND N&W PER TABLE NOTE 1 ARE PROVIDED IN *HARDY FRAME*® HFTC KIT.
5. 1/4" x 4-1/2" (MIN) WS SCREWS, QUANTITY PER TABLE.
6. USP MP4F CONNECTORS, QUANTITY BY BUILDING DESIGN PROFESSIONAL.

STAGGERED-HFP POST (9)

REVISIONS	DATE

FLOOR SYSTEM DETAILS - HFX PANELS

THIS DETAIL SHEET IS NOT PROPRIETARY AND IS NOT REQUIRED FOR PLAN SUBMITTAL WITH MITEK® *HARDY FRAME*® PRODUCTS

MiTek®
HARDY FRAME SHEAR WALL SYSTEMS
16023 SWINGLEY RIDGE RD
CHESTERFIELD, MO 63017
(800) 325-8075
WWW.HARDYFRAME.COM

DATE:
1-1-2023

HFX3