GENERAL NOTES:
THESE DRAWINGS ARE "BUILDERS PLANS" INDICATING GENERAL DESIGN INTENT ONLY. THE CONTRACTOR SHALL BE RESPONSIBLE FOR VERIFICATIONS OF ALL DIMENSIONS, GRADES AND OTHER CONDITIONS ON-SITE. ANY DISCREPANCIES ARE TO BE REPORTED TO THE DESIGNER FOR CLARIFICATION AND/OR CORRECTION PRIOR TO BEGINNING ANY WORK.

ALL CONSTRUCTION SHALL CONFORM THE 2022 CALIFORNIA BUILDING CODE, AND SHALL BE EQUAL TO OR EXCEED LOCAL AND COUNTY MINIMUM CONSTRUCTION REQUIREMENTS.

ENGINEER'S NOTES TAKE PRECEDENCE OVER THESE NOTES. WRITTEN DIMENSIONS AND NOTES TAKE PRECEDENCE OVER SCALED DRAWINGS. SITE CONDITIONS TAKE PRECEDENCE OVER ALL NOTES AND DRAWINGS.

THE CONTRACTOR SHALL PROVIDE MECHANICAL AND ELECTRICAL ENGINEERING AS REQUIRED TO COMPLETE WORK FOR INTENDED PURPOSE. MECHANICAL CONTRACTOR SHALL VERIFY DIMENSIONS OF ALL NECESSARY FLUE CHASES, DUCTS & EQUIPMENT.

FLOOR PLAN NOTES
CEMENT BOARD OR BETTER SHALL BE USED AT ALL TILE LOCATIONS, TUBS, AND SHOWER STALLS. ALL SILLS, SEATS, & SHELVES IN SHOWER/TUB AREAS SHALL BE WATERPROOFED, TILED, & SLOPED TO DRAIN MIN. 1/4" PER FOOT.

CABINETRY SHOWN IS A CONCEPTUAL DEPICTION. ACTUAL FINAL CABINET DESIGN AND LAYOUT SHALL BE BY THE DESIGNER OF THE CABINET SUPPLIER AND COORDINATED WITH THE BUILDER, OWNERS, AND ACTUAL FIELD DIMENSIONS.

SITE MANAGEMENT NOTES:
A. CONSTRUCTION SITE SHALL BE ENCLOSED BY 6' OPAQUE FENCE AT ALL TIMES DURING CONSTRUCTION.
B. NO CONSTRUCTION MATERIAL, EQUIPMENT, PORTABLE TOILETS, TRASH CONTAINERS, OR DEBRIS SHALL BE PLACED IN THE PUBLIC RIGHT-OF-WAY.
C. A TRASH CONTAINER SHALL BE MAINTAINED ON SITE AT ALL TIMES AND DEBRIS ON SITE WHICH COULD OTHERWISE BLOWN AWAY, SHALL BE REGULARLY COLLECTED AND PLACED IN CONTAINER.
D. ALL CONSTRUCTION DEBRIS (WOOD SCRAPS AND OTHER DEBRIS, WHICH CANNOT BLOW AWAY) SHALL BE PILED WITHIN THE PROPERTY LINES OF THE PROJECT IN A NEAT AND SAFE MANNER.

SURVEYOR NOTES:
THE SURVEYOR IS REQUIRED TO PROVIDE THE FOLLOWING:
1. LETTER VERIFYING THE STRUCTURE IS LOCATED AS APPROVED ON THE PLANS FOR SETBACKS PRIOR TO POURING ANY CONCRETE.
2. LETTER VERIFYING THE HEIGHT OF THE STRUCTURE IS AS SHOWN ON THE PLANS AT FRAME INSPECTION.

GENERAL NOTES:
1. THE CONTRACTOR SHALL INSPECT THE PROJECT SITE PRIOR TO SUBMITTING A BID IN ORDER TO OBSERVE AND DETERMINE THE EXISTING JOB SITE CONDITIONS.

2. THE CONTRACTOR AGREES THAT IN ACCORDANCE WITH GENERALLY ACCEPTED CONSTRUCTION PRACTICES, CONTRACTOR SHALL ASSUME COMPLETE RESPONSIBILITY FOR JOB SITE CONDITIONS DURING THE COURSE OF CONSTRUCTION OF THE PROJECT. THESE PLANS DO NOT INCLUDE COMPONENTS NECESSARY FOR CONSTRUCTION SAFETY. IT IS THE CONTRACTOR'S RESPONSIBILITY TO PROVIDE FOR THE SAFETY OF ALL PERSONS AND PROPERTY DURING THE COURSE OF THE PROJECT AND TO COMPLY WITH CONSTRUCTION SAFETY ORDERS. THESE REQUIREMENTS SHALL APPLY CONTINUOUSLY AND NOT BE LIMITED TO NORMAL WORKING HOURS.

3. EXISTING UNDERGROUND UTILITIES AND IMPROVEMENTS ARE BASED ON SCHEMATIC MAPPING PROVIDED BY THE UTILITY COMPANIES. NO GUARANTEE IS MADE AS TO THE ACCURACY OR COMPLETENESS OF THE INFORMATION SHOWN. CONTRACTOR SHALL NOTIFY UNDERGROUND SERVICE ALERT (U.S.A.) AT (800) 227-2600 OR 811 A MINIMUM OF 48 HOURS IN ADVANCE OF ANY EXCAVATION. ANY ADDITIONAL COSTS INCURRED AS A RESULT OF CONTRACTOR'S FAILURE TO VERIFY LOCATION OF MARKED EXISTING UTILITIES PRIOR TO BEGINNING OF CONSTRUCTION SHALL BE BORNE BY THE CONTRACTOR.

4. TRAFFIC CONTROL DURING CONSTRUCTION SHALL BE THE CONTRACTOR'S RESPONSIBILITY. THE CONTRACTOR SHALL PROVIDE FOR CONTINUOUS VEHICULAR AND PEDESTRIAN INGRESS AND EGRESS TO ALL PRIVATE PROPERTY ADJACENT TO THE WORK THROUGHOUT THE PERIOD OF CONSTRUCTION

5. THE CONTRACTOR SHALL BE RESPONSIBLE FOR ANY DAMAGES TO THE SITE OR THE SURROUNDING AREA AS A RESULT OF THE CONTRACTOR'S WORK OR OPERATIONS. EXISTING FACILITIES THAT ARE DAMAGED OR DISPLACED BY THE CONTRACTOR SHALL BE REPLACED AT THE CONTRACTOR'S EXPENSE.

THE PRIME CONTRACTOR AND ALL SUBCONTRACTORS SHALL BE APPROPRIATELY LICENSED BY THE CALIFORNIA CONTRACTORS STATE LICENSE BOARD. THE BUILDER/CONTRACTOR AND ALL SUBCONTRACTORS SHALL CONFORM TO ALL APPLICABLE BUILDING CODES.

**CONSTRUCTION OPERATION AND PARKING NOTES.**

A. CONSTRUCTION, DELIVERIES AND SERVICING OF ANY ITEM(I.E.,DEBRIS BOX, SANITARY SEWER FACILITIES, ETC.) ON THE SITE SHALL ONLY PERMITTED MONDAY THROUGH FRIDAY, 8:00 AM TO 5:00 PM.

B. NO WORK OF-ANY NATURE, INCLUDING BUT NOT LIMITED TO HAULING OR HEAVY EQUIPMENT SHALL BE PERMITTED ON SATURDAYS, SUNDAYS OR HOLIDAYS.

**DEFERRED APPROVALS**
THE CONTRACTOR IS RESPONSIBLE FOR PROVIDING DOCUMENTS PREPARED BY APPROPRIATE DESIGN PROFESSIONAL, IN ACCORDANCE WITH CBC 107.3.4.2 AND COORDINATING ALL ASPECTS OF THE WORK FOR THE BELOW LISTED ITEMS.
(2) COPIES OF EACH DEFERRED SUBMITTAL WILL FIRST BE SUBMITTED TO THE DESIGNER/ ARCHITECT/ENGINEER-OF-RECORD, WHO WILL REVIEW THEM AND FORWARD THEM TO THE BUILDING DEPARTMENT WITH NOTATIONS INDICATING THAT THE SUBMITTALS CONFORM TO THE DESIGN OF THE BUILDING.THE ENGINEER(S) RESPONSIBLE FOR THE DESIGN OF THE DEFERRED SUBMITTAL ITEMS SHALL STAMP AND WET- SIGN THOSE DRAWINGS AND CALCULATIONS FOR WHICH HE/SHE IS RESPONSIBLE.
DEFERRED ITEMS LIST:
NONE

**SMC ORDINANCE 4873:**
SUBSTANTIAL ALTERATION: THE RENOVATION OF ANY STRUCTURE AND/OR WHEN COMBINED WITH ANY ADDITIONS TO THE STRUCTURE, AFFECTS A GROSS FLOOR AREA WHICH EXCEEDS FIFTY PERCENT (50%) OF THE EXISTING FLOOR AREA OF THE STRUCTURE. FOR THE PURPOSE OF THIS SECTION, WHEN DETERMINING THE AFFECTED GROSS FLOOR AREA OF AN EXISTING STRUCTURE, WHENEVER MORE THAN 50% OF THE WALL OR CEILING COVERINGS (E.G., WALLBOARD, PLASTER, ETC.) HAVE BEEN REMOVED FROM WITHIN A ROOM OR SPACE BOUNDED BY THREE OR MORE WALLS WITHIN THE STRUCTURE, THE ENTIRE GROSS FLOOR AREA OF THE ROOM OR SPACE SHALL BE COUNTED TOWARDS THE TOTAL AFFECTED GROSS FLOOR AREA OF THE EXISTING STRUCTURE.

§903.6.1 WHERE REQUIRED. ALL EXISTING BUILDINGS AND STRUCTURES SHALL BE PROVIDED WITH AN AUTOMATIC FIRE SPRINKLER SYSTEM WHEN ANY OF THE FOLLOWING CONDITIONS OCCUR: A. WHERE THE GROSS FLOOR AREA OF A PROPOSED ALTERATION, ADDITION, OR COMBINATION OF ALTERATIONS AND ADDITIONS AND THE GROSS FLOOR AREA OF ANY ALTERATIONS, ADDITIONS, OR COMBINATION OF ALTERATIONS AND ADDITIONS MEETS THE DEFINITION OF A "SUBSTANTIAL ALTERATION".

**TOTAL AFFECTED GROSS FLOOR AREA**

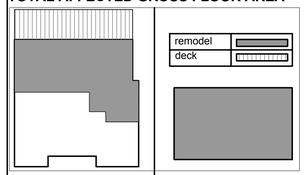


KEYPLAN NOT TO SCALE
PROPOSED MAIN LEVEL ADDITION+REMODEL = 842 SQ.FT

KEYPLAN NOT TO SCALE
PROPOSED LOWER LEVEL ADDITION+REMODEL = 924 SQ.FT

**TOTAL AFFECTED GROSS FLOOR AREA**
=842+924 **= 1766 SQ.FT**

**SCOPE OF WORK**:
**563SF ADDITION, 385SF NEW DECK, AND 753SF ALTERATION**

**EXTERIOR**:
1. UPGRADE ELECTRIC PANEL AND RELOCATE FROM R TO L SIDE OF HOME
2. N REAR DECK 385SF ON MAIN LEVEL
3. REPLACE FRONT SIDING W/ STUCCO & STONE VENEER
4. N ROOF OVER FRONT ENTRY
5. NEW ROOF OVER ADDITION

**MAIN LEVEL, FAMILY ROOM**
1. REPLACE LARGE CASEMENT WINDOW W/ 4-LEAF SLIDER TO NEW DECK
2. DEMO WOODBURNING FP & CHIMNEY, REPLACE W/ ELECTRIC FP
3. N CLOSET ADJACENT TO BATH #1
4. MODIFY STAIRS TO LOWER LEVEL W/IN 89SF ADDITION

**KITCHEN-DINING**
1. REPLACE KITCHEN ISLAND AND INCLUDE SINK AND APPLIANCES
2. REPLACE GAS RANGE AND HOOD
3. N SKYLIGHT OVER KITCHEN
4. N SKYLIGHT OVER DINING AREA
5. REPLACE CABINETS, COUNTERS, APPLIANCES

**BATH #1**
1. N SKYLIGHT

**LAUNDRY ROOM**

1. N TANKLESS W-HEATER (REPLACE GARAGE W-HEATER)
2. N SKYLIGHT

**GARAGE**
1. REMOVE W-HEATER

**LOWER LEVEL**
1. 474SF ADDITION BELOW N DECK
2. NEW BEDROOM #4 W/ EN SUITE BATH & WALK-IN CLOSE
3. RELOCATE BATH #3
4. RELOCATE BEDROOM #3
5. N FAMILY ROOM
6. N (2) CONCRETE PADS & SLIDING DOORS
7. NEW ELECTRICAL THROUGHOUT

**VICINITY MAP: not to scale**

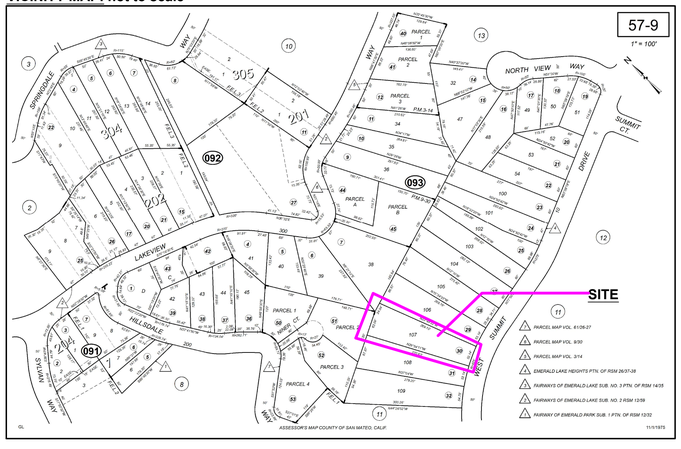


**BUILDING DATA:**
CONSTRUCTION TYPE: VB
BUILDING CURRENTLY NOT FIRE SPRINKLERED
PARCEL MAP: APN 057-093-290
ZONE: RH/DR
LAND USE: SINGLE FAMILY RESIDENCE
HOUSE LEVEL: TWO STORIES
SEWER: EMERALD LAKES SEWER DIST
WATER SUPPLY: City of Redwood City Municipal Water Department

| | MAIN RESI. | | | TOTAL | |
|---|---|---|---|---|---|
| | BEDRMS | BATH | | BEDRMS | BATH |
| EXISTING | 3 | 2 | | **3** | **2** |
| PROPOSED | 4 | 4 | | **4** | **4** |

**PLANNING DATA:**
EXISTING LOT SIZE: **18,900** SQ.FT (0.43 Acres)

| | **ZONING COMPLIANCE** | | |
|---|---|---|---|
| | EXISTING | PROPOSED | ALLOWED |
| **LOT COVERAGE:** | 1896/18900 =10% | 2390/18900 = (12.6%) | 25% = 4725 SQ.FT |
| **TOTAL FLOOR AREA (TFA):** | 2030/18900 = (10.7%) | 2593/18900 = (12.7%) | 30% = 5670 SQ.FT |
| **SETBACKS:** | | | |
| FRONT | 24'-7" | 20'-2" | 20'-0" |
| REAR | 201'-1" | 191'-0" | 20'-0" |
| RIGHT SIDE | 6'-7" | 6'-7" | 7'-6" (TOTAL 20') |
| LEFT SIDE | 8'-4" | 8'-4" | 7'-6" (TOTAL 20') |
| **HEIGHT** | 21'-8" FT | 21'-8" FT | 28 FT |

| | EXISTING | CHANGE IN | TOTAL PROPOSED |
|---|---|---|---|
| **HABITABLE LIVING AREA:** | 1830 SQ.FT | 1830 (existing) + 563 (add) | 2393 SQ.FT |
| **NON- HABITABLE AREA** | 200 SQ.FT (GARAGE) | 200 SQ.FT | 200 SQ.FT |

**THE FOLLOWING ARE DEFERRED SUBMITTAL**
1. FIRE SPRINKLER SYSTEM

**TREE AREA PROTECTION:**
**NO** EXISTING TREES ARE PROPOSED TO BE CUT.
NO WORK PROPOSED UNDER ANY EXISTING TREE DRIPLINE

BASED ON 2022 CALIFORNIA RESIDENTIAL CODE-
2022 CALIFORNIA RESIDENTIAL CODE
2022 CALIFORNIA BUILDING CODE
2022 CALIFORNIA MECHANICAL CODE
2022 CALIFORNIA ELECTRICAL CODE
2022 CALIFORNIA PLUMBING CODE
2022 CALIFORNIA GREEN BUILDING CODE
2022 CALIFORNIA ENERGY EFFICIENCY STANDARDS

OWNER INFORMATION:
BAYSHORE INVESTMENT GROUP, LLC.
3113 MIDDLEFIELD RD, REDWOOD CITY, CA 94063
650-776-1581 francesca.lampert@cbnorcal.com

CONTRACTOR: OWNER-BUILDER

STRUCTURAL ENGINEER: LAUREN WINGERT
5049 SUTHERLAND DR., CONCORD CA 94521
925-330-3731 lauren.m.wingert@gmail.com

DESIGNER: XAR DESIGNS
2110 STANFORD AVE MOUNTAIN VIEW 94040
408-685-5214 sarrah.reshamwala@gmail.com

**DRAWING INDEX:**

ARCHITECTURAL SHEETS:
A-01 COVER SHEET
S-01 TOPOGRAPHIC SURVEY
A-02 SITE PLAN
A-03 MAIN LVL PLANS
A-04 LOWER LVL PLANS
A-05 ELEVATIONS - I
A-06 ELEVATIONS - II
A-07 ROOF PLAN
A-08 DETAILS
E-01 ELECTRICAL PLAN
B-01 CALGREEN CHECKLIST I
B-02 CALGREEN CHECKLIST II
B-03 BMPs
T-01 - 04 TITLE 24
L-01 LANDSCAPE PLAN
C-01 EROSION CONTROL
C-02 EROSION CONTROL

STRUCTURAL ENGINEERING SHEETS:
S1.0 GENERAL NOTES
S1.1 TYPICAL DETAILS I
S1.2 TYPICAL DETAILS II
S1.3 TYPICAL DETAILS III
S2.0 FOUNDATION & FLOOR FRAMING PLAN
S2.1 UPPER FLOOR & LOW ROOF FRAMING PLAN
S2.2 HIGH ROOF FRAMING PLAN
S3.0 DETAILS I
S3.1 DETAILS II

**FOR OFFICE USE ONLY**

PROJECT NUMBER:
-

PROJECT ADDRESS:
40 W SUMMIT DR,
EMERALD HILLS, CA 94062

DRAWN FOR:
BOB JOHNSTON
40 W SUMMIT DR, EMERALD HILLS, CA 94062

DRAWN BY:
SARRAH RESHAMWALA
XAR DESIGNS
2110 STANFORD AVE, MOUNTAIN VIEW CA 94040
sarrah.reshamwala@gmail.com

FOR OFFICE USE ONLY:

SCALE AT ARCH D:

| REV | DATE | ISSUE |
|---|---|---|
| | 09/12/2024 | |
| 1 | | |
| 2 | | |

COVER SHEET

**40 W SUMMIT DR.**
INTERIOR REMODEL & ADDITION

**A-01**

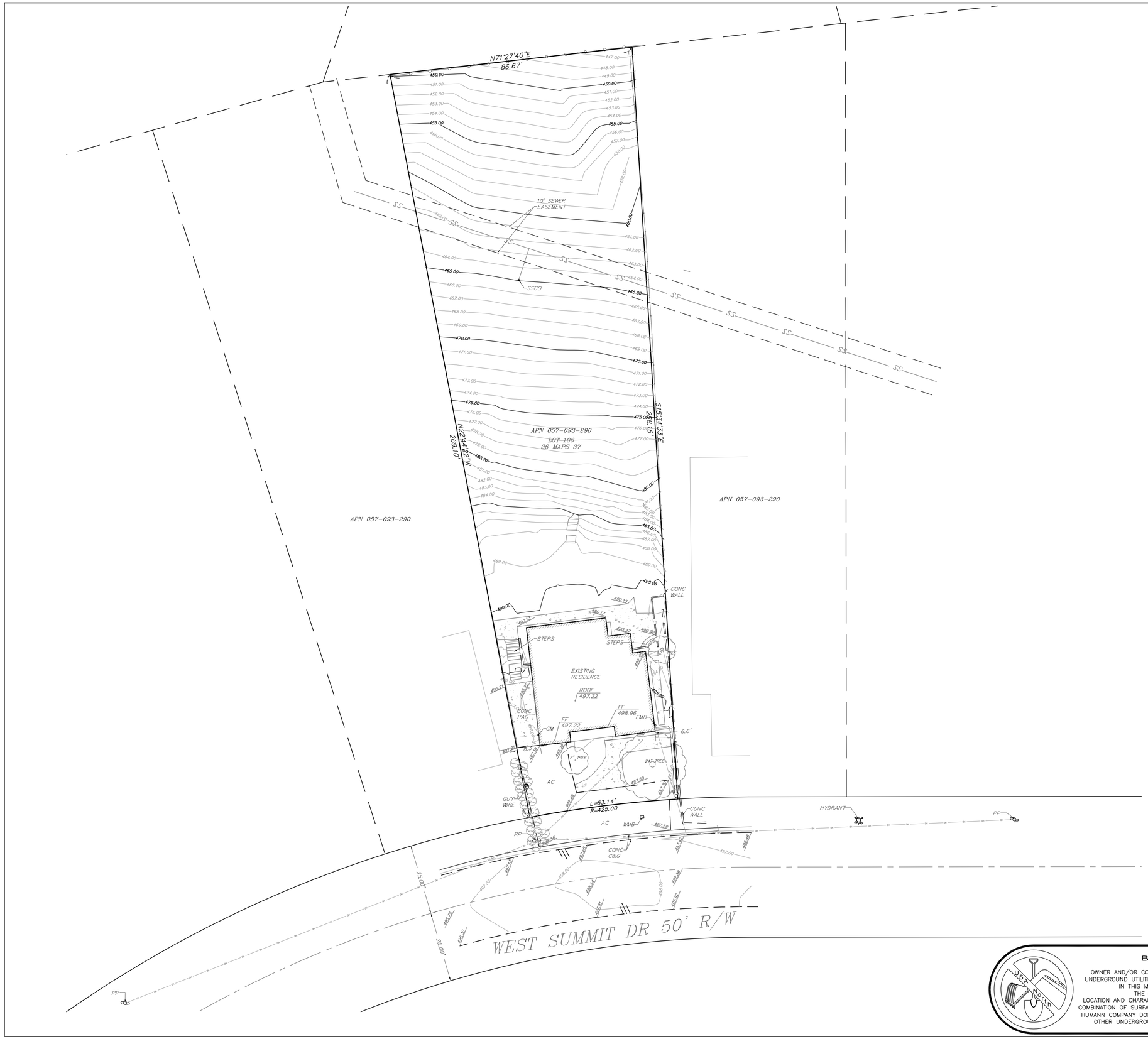


GRAPHIC SCALE

16 0 8 16 32 64

( IN FEET )
1 inch = 16 ft.

## LEGEND:

| | |
|---|---|
| | PROPERTY LINE |
| | ADJACENT PROPERTY LINE |
| | WIRE FENCE |
| | WOOD FENCE |
| | CENTERLINE |
| SS | SEWER LINE |
| OH | OVERHEAD UTILITIES |
| | EDGE OF PAVEMENT |
| | CONC WALL |
| 00.00 | SPOT ELEVATION |
| AC | ASPHALTIC CONCRETE |
| CONC | CONCRETE |
| C&G | CURB & GUTTER |
| EM | ELECTRIC METER |
| EP | EDGE OF PAVEMENT |
| FF | FINISH FLOOR |
| FL | FLOWLINE |
| GM | GAS METER |
| PP | POWER POLE |
| R/W | RIGHT OF WAY |
| SSCO | SEWER CLEANOUT |
| WMB | WATER METER BOX |
| | HYDRANT |
| | UTILITY POLE |
| | CONCRETE |
| | TREE SIZE WITH DRIPLINE |

NOTE:
ACTUAL TREE TRUNK LOCATIONS ARE SHOWN. DRIPLINES SHOWN ARE ONLY APPROXIMATE. DRIPLINES IN AREAS OF PROPOSED CONSTRUCTION SHOULD BE FIELD VERIFIED.

## NOTES:

BENCHMARK :
ELEVATIONS ARE BASED ON NAVD 88 DATUM. PROJECT BENCHMARK IS THE FF OF EXISTING GARAGE AS SHOWN. ELEVATION = 497.22'

OWNER(S):
HOLMBERG TRUST

PROPERTY ADDRESS: 40 W SUMMIT DR
REDWOOD CITY CA 94062
057-093-290
18,707 sq.ft. 0.43 acres

EASEMENTS: AS SHOWN
EXISTING USE: RESIDENTIAL-SINGLE FAMILY

I HEREBY STATE THAT I AM A LICENSED SURVEYOR OF THE STATE OF CALIFORNIA, THAT THIS MAP CORRECTLY REPRESENTS A SURVEY MADE UNDER MY SUPERVISION IN JULY 2024, AND THAT PROPERTY LINES SHOWN HEREON ARE COMPILED FROM RECORD DATA AND THAT THIS MAP DOES NOT INCLUDE EASEMENTS EXCEPT THOSE SPECIFICALLY DELINEATED HEREON.

IF UNDERGROUND UTILITIES, ZONE, SETBACK AND STREET WIDENING DATA ARE SHOWN HEREON, IT IS FOR INFORMATION ONLY, HAVING BEEN OBTAINED FROM AVAILABLE SOURCES NOT CONNECTED WITH THIS CORPORATION. THEREFORE, NO GUARANTEE IS MADE AS TO THE ACCURACY OR COMPLETENESS OF SAID INFORMATION.

**BEFORE EXCAVATING CALL U.S.A.**

OWNER AND/OR CONTRACTOR ARE RESPONSIBLE FOR LOCATION AND VERIFICATION OF ALL EXISTING UNDERGROUND UTILITIES. UNDERGROUND SERVICE ALERT (USA) SHOULD BE NOTIFIED FOR ASSISTANCE IN THIS MATTER AT (800) 227-2600, 48 HOURS PRIOR TO ANY CONSTRUCTION.
THE (USA) AUTHORIZATION NUMBER SHALL BE KEPT AT THE JOB SITE.
LOCATION AND CHARACTER OF ANY UTILITIES IF SHOWN HEREON ARE APPROXIMATE, AND TAKEN FROM A COMBINATION OF SURFACE STRUCTURE OBSERVATION AND/OR THE RECORDS OF THE CONTROLLING AGENCY. HUMANN COMPANY DOES NOT ASSUME RESPONSIBILITY FOR THE LOCATION OF ANY EXISTING UTILITIES OR OTHER UNDERGROUND FEATURES SUCH AS VAULTS, TANKS, BASEMENTS, BURIED OBJECTS, ...ETC.

USA North


triad/holmes assoc
civil engineering
land surveying
MAMMOTH LAKES
BISHOP
REDWOOD CITY

PROFESSIONAL LAND SURVEYOR
ANDREW K HOLMES
PLS 4428
STATE OF CALIFORNIA



Copyright (C) 2024 by Triad/Holmes Associates
All Rights Reserved. This Document is Intended Only for Use on the Project Specified in the Title Block. Any Reproduction of this Document or Portions of this Document Without the Written Permission and Consent of Triad/Holmes, is Prohibited.


| REVISIONS: | BY: |
|---|---|
| | |

PREPARED FOR:

# LOT 106, 26 MAPS 37

## TOPOGRAPHIC SURVEY

SANTA MATEO COUNTY, CALIFORNIA

| | |
|---|---|
| DATE | 7/24/2024 |
| SCALE | 1" = 16' |
| DRAWN | MN |
| JOB NO. | 09-2372 |
| DWG | 1 |
| SHEET | 1 OF 1 |

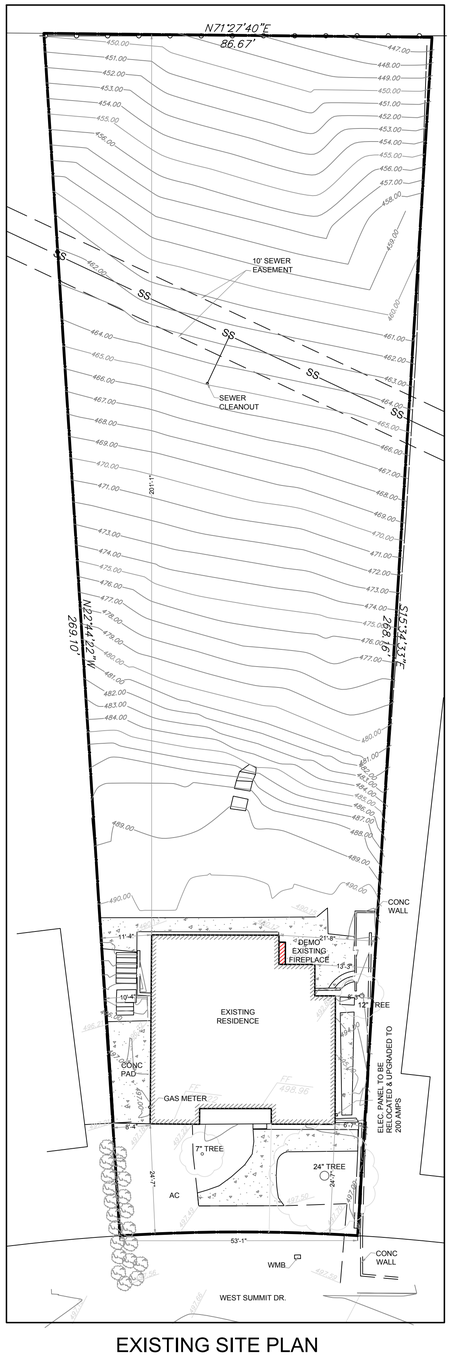


EXISTING SITE PLAN

$\frac{1}{16}$"=1'0"@ARCH D

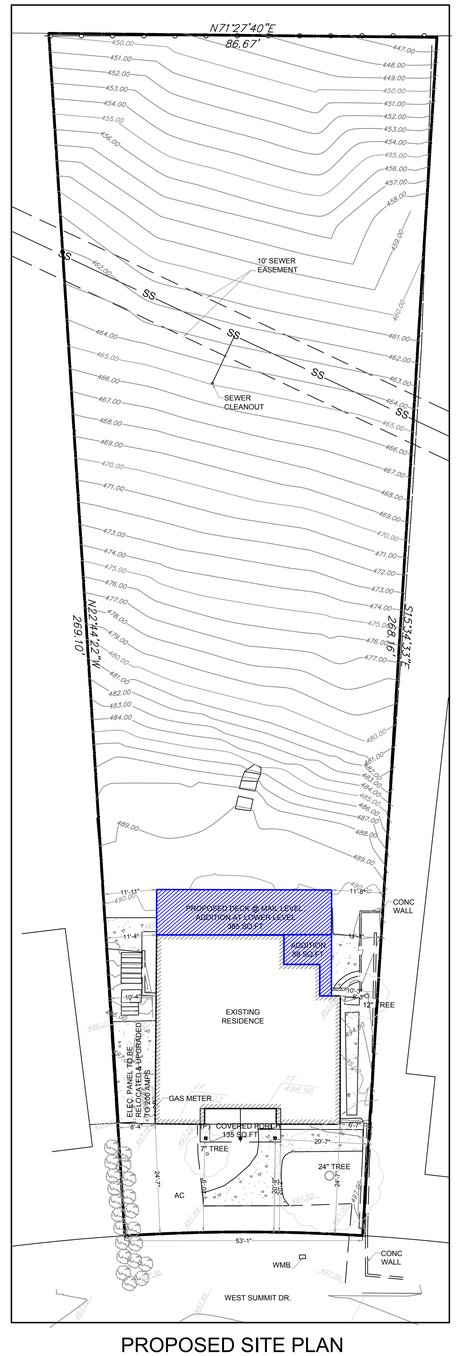


PROPOSED SITE PLAN

$\frac{1}{16}$"=1'0"@ARCH D

## DEMOLITION NOTES

1. THE CONTRACTOR SHALL FIELD VERIFY ALL EXISTING CONDITIONS AND NOTIFY THE ARCHITECT IMMEDIATELY OF ANY DISCREPANCIES OR CONFLICTS THAT MIGHT ARISE IN THE COURSE OF THE DEMOLITION WORK.
2. VERIFY LOCATIONS OF EXISTING MECHANICAL, PLUMBING AND ELECTRICAL UTILITIES. LOCATE AND PROTECT UTILITIES TO REMAIN. DISCONNECT, REMOVE BACK TO NEAREST JUNCTION BOX OR PANEL, AS REQUIRED, AND CAP DESIGNATED UTILITIES WITHIN THE DEMOLITION AREA. REFER TO THE MECHANICAL, PLUMBING AND ELECTRICAL DRAWINGS FOR ADDITIONAL INFO.
3. ALL EXISTING BUILDING UTILITIES SHALL REMAIN IN OPERATION DURING CONSTRUCTION. PROVIDE REROUTING OF UTILITIES SERVING ADJACENT AREAS THAT ARE TO MAINTAIN UNINTERRUPTED SERVICE. ANY TEMPORARY SUSPENSION OF SERVICE SHALL BE COORDINATED AND APPROVED BY THE FACILITY MANAGER, NOT LESS THAN 24 HOURS IN ADVANCE.
4. THE DEMOLITION PLAN KEYNOTES ARE DIAGRAMMATIC AND GENERAL IN NATURE. THE INTENT IS TO ILLUSTRATE THE COMPLETE DEMOLITION OF THE SPACES INDICATED UNLESS NOTED OTHERWISE. FIELD VERIFICATION OF EXISTING CONDITIONS AND SPECIFIC QUANTITIES IS THE RESPONSIBILITY OF THE CONTRACTOR.
5. REMOVAL AND DISPOSAL OF DEMOLITION DEBRIS IS THE RESPONSIBILITY OF THE CONTRACTOR. VERIFY THE HAULING ROUTE THROUGH THE BUILDING, THE DEMOLITION STAGING AREA, AND THE LOCATION OF THE DUMPSTERS WITH THE OWNER PRIOR TO THE START OF DEMOLITION. DISPOSAL OF RUBBISH SHALL BE DONE IN A LEGAL MANNER.
6. THE OWNER RESERVES THE RIGHT TO SALVAGE ANY DEMOLISHED ITEM. VERIFY ITEMS TO BE SALVAGED WITH THE OWNER PRIOR TO THE START OF DEMOLITION. REMOVE, PROTECT, CLEAN, REPAIR FOR REUSE AND TURN OVER SUCH ITEMS AS DIRECTED BY THE OWNER.
7. IN ORDER TO INSTALL SOME OF THE NEW WORK (INCLUDING, BUT NOT LIMITED TO MECHANICAL, PLUMBING OR ELECTRICAL) IT WILL BE NECESSARY FOR THE CONTRACTOR AND HIS SUBCONTRACTORS TO REMOVE AND REPLACE (OR REFINISH) EXISTING WALLS, FLOORS, OR CEILING IN THE AREAS OF THE BUILDING NOT SHOWN ON THESE PLANS. THE CONTRACTOR SHALL INCLUDE ALL RELATED COSTS IN HIS BASE BID, WHETHER SHOWN ON THESE PLANS OR NOT.
8. PROVIDE DUST BARRIERS AROUND OPENINGS, TO AND FROM THE CONSTRUCTION AREA. PROVIDE ALL MEANS NECESSARY TO INHIBIT DUST FROM ENTERING OTHER PORTIONS OF THE FACILITY. SUBMIT BARRIER LOCATIONS TO THE ARCHITECT FOR APPROVAL, PRIOR TO INSTALLATION.
9. PROVIDE ADEQUATE SHORING, BRACING, BARRICADES AND PROTECTIVE MEASURES AS REQUIRED TO SAFELY EXECUTE THE WORK IN THE CONSTRUCTION AREA AND THE AREAS TO REMAIN ADJACENT TO THE CONSTRUCTION AREA. CEASE OPERATIONS AND NOTIFY THE ARCHITECT IMMEDIATELY IF THE STRUCTURE APPEARS TO BE ENDANGERED. DO NOT RESUME OPERATIONS UNTIL CORRECTIVE MEASURES HAVE BEEN TAKEN.
10. CONTRACTOR SHALL MAINTAIN REQUIRED MEANS OF EGRESS AND ENSURE THAT EXIT ROUTES ARE SIGNED, LIGHTED AND PROTECTED IN ACCORDANCE WITH CODE REQUIREMENTS. RELOCATE EXISTING AND/OR PROVIDE SMOKE PROTECTORS AND LIFE SAFETY EQUIPMENT FOR ADEQUATE COVERAGE.
11. PROVIDE TEMPORARY NON-COMBUSTIBLE CONSTRUCTION BARRIERS WHERE REQUIRED BY CODE AND THE GOVERNING FIRE AUTHORITY. MINIMUM REQUIREMENTS:
    A. FULL HEIGHT WALL FROM FLOOR TO CEILING.
    B. B.STUDS AT 24" O.C., WITH 5/8" TYPE 'X' GYPSUM BOARD.
    C. NON-COMBUSTIBLE ACCESS DOOR WITH 3 HINGES AND SPRING CLOSER.
12. CUT RIGID MATERIALS USING MASONRY SAW OR CORE DRILL. PNEUMATIC TOOLS ARE NOT ALLOWED WITHOUT PRIOR APPROVAL.
13. ALL CORE DRILLING OR OTHER NOISY WORK SHALL BE SCHEDULED 48 HOURS IN ADVANCE WITH THE OWNER.
14. APPLY CEMENT BASE FLOOR PATCH AS REQUIRED TO FILL DINGS, NAIL HOLES, CHIPS AND CRACKS.
15. AT FLOOR AREAS SCHEDULED TO RECIEVE NEW FLOOR COVERING, REMOVE EXISTING FLOOR COVERING AND PREPARE SUBSTRATE FOR NEW FLOOR COVERING PER SPECIFICATIONS AND MANUFACTURER'S REQUIREMENTS.
16. CONTRACTOR IS RESPONSIBLE FOR BUILDING SECURITY DURING DEMOLITION PHASE. PROTECT ALL OPENINGS FROM WEATHER CONDITIONS AND SECURE THEM TO PREVENT VANDALISM.
17. DO NOT PERFORM ANY WORK THAT WILL VOID WARRANTIES OF EXISTING WEATHER EXPOSED OR MOISTURE RESISTANT ELEMENTS WITHOUT PRIOR APPROVAL FROM THE OWNER.
18. ARCHITECT ASSUMES NO RESPONSIBILITY RELATING TO ANY TOXIC MATERIALS, INCLUDING ASBESTOS, AND ASSUMES NO RESPONSIBILITY TO ITS EXISTENCE OR REMOVAL. THE OWNER WILL TAKE ACTION FOR DIRECTLY CONTRACTING WITH A CONSULTANT OR SPECIALIST, LICENSED BY THE STATE, FOR SUCH SERVICES SHOULD THOSE SERVICES BE REQUIRED ON THE PROJECT.
19. SAWCUT & REMOVE EXISTING SLABS AS REQUIRED FOR UNDERGROUND ELECTRICAL & PLUMBING LINES. REFER TO PLUMBING, ELECTRICAL & KITCHEN DRAWINGS FOR ALL SAWCUTS & TRENCHING WORK REQUIRED. REPLACE OR REPAIR ANY VAPOR BARRIERS DISTURBED DURING EXCAVATIONS.
20. CONTRACTOR SHALL PROVIDE ALL TEMPORARY BRACING AS REQUIRED TO MAINTAIN STRUCTURAL STABILITY OF THE EXISTING STRUCTURE DURING ALL PHASES OF CONSTRUCTION.
21. PROTECT FROM DAMAGE DURING CONSTRUCTION ALL EXISTING WALLS, FLOORS, CEILINGS, ETC. THAT ARE TO REMAIN. CONTRACTOR TO PATCH & REPAIR ANY DAMAGED PORTIONS OF THE EXISTING BUILDING AS REQUIRED TO MATCH THE EXISTING ADJACENT CONSTRUCTION & FINISHES.
22. PROTECT ADJACENT SURFACES NOT SCHEDULED FOR DEMOLITION. PATCH AND REPAIR DAMAGED FINISHES, ITEMS AND FIXTURES TO REMAIN AND/OR REPLACE IN KIND TO MATCH EXISTING FROM DAMAGE DURING THE PROGRESS OF THE WORK. PROVIDE TEMPORARY SAFETY BARRIERS REQUIRED BY CODE AND AS INDICATED TO ENSURE PUBLIC SAFETY AND TO ALLOW BUILDING OCCUPANCY. CONTRACTOR TO SUBMIT FOR APPROVAL, BARRIER LOCATIONS, AND METHOD OF CONSTRUCTION TO THE ARCHITECT PRIOR TO INSTALLATION.
23. CONSTRUCTION-RELATED MATERIALS, EQUIPMENT, ETC. MUST BE STORED ON SITE UNLESS PERMITTED IN ADVANCE BY THE PUBLIC WORKS DEPARTMENT. THIS IS TO AVOID CAUSING SAFETY AND/OR OPERATIONAL ISSUES FOR THE MOVEMENTS OF PEDESTRIANS, CYCLISTS AND VEHICULAR TRAFFIC.
24. A SEPARATE ENCROACHMENT PERMIT (EP) WILL BE REQUIRED FOR ALL IMPROVEMENTS IN THE PUBLIC RIGHT-OF-WAY THAT ARE BEYOND THE PROPERTY LINE.
25. THE DEVELOPER IS RESPONSIBLE FOR RESTORING AND REPLACING ANY DAMAGE IN THE PUBLIC RIGHT OF WAY CAUSED DUE TO CONSTRUCTION ACTIVITIES.

## EROSION AND SEDIMENT CONTROL NOTES AND MEASURES

1. DURING WINTER MONTHS, ALL DISTURBED SLOPES GREATER THAN 2:1 SHALL HAVE MANDATORY EROSION CONTROL FABRIC.
2. INLET PROTECTION SHALL BE INSTALLED AT OPEN INLETS TO PREVENT SEDIMENT FORM ENTERING THE STORM DRAIN SYSTEM. INLETS NOT USED IN CONJUNCTION WITH EROSION CONTROL ARE TO BE BLOCKED TO PREVENT ENTRY OF SEDIMENT.
3. THIS EROSION AND SEDIMENT CONTROL PLAN MAY NOT COVER ALL THE SITUATIONS THAT MAY ARISE DURING CONSTRUCTION DUE TO UNANTICIPATED FIELD CONDITIONS. VARIATIONS AND ADDITIONS MAY BE MADE TO THIS PLAN IN THE FIELD. NOTIFY THE CITY REPRESENTATIVE OF ANY FIELD CHANGES.
4. CONTRACTOR SHALL BE RESPONSIBLE FOR MONITORING EROSION AND SEDIMENT CONTROL PRIOR, DURING, AND AFTER STORM EVENTS.
5. REASONABLE CARE SHALL BE TAKEN WHEN HAULING ANY EARTH, SAND, GRAVEL, STONE, DEBRIS, PAPER OR ANY OTHER SUBSTANCE OVER ANY PUBLIC STREET, ALLEY OR OTHER PUBLIC PLACE. SHOULD ANY BLOW, SPILL, OR TRACK OVER AND UPON SAID PUBLIC OR ADJACENT PRIVATE PROPERTY, IMMEDIATE REMEDY SHALL OCCUR.
6. SANITARY FACILITIES SHALL BE MAINTAINED ON THE SITE.
7. DURING THE RAINY SEASON, ALL PAVED AREAS SHALL BE KEPT CLEAR OF EARTH MATERIAL AND DEBRIS. THE SITE SHALL BE MAINTAINED SO AS TO MINIMIZE SEDIMENT LADEN RUNOFF TO ANY STORM DRAINAGE SYSTEMS, INCLUDING EXISTING DRAINAGE SWALES AND WATER COURSES.
8. DEMOLITION OPERATIONS SHALL BE CARRIED OUT IN SUCH A MANNER THAT EROSION AND WATER POLLUTION WILL BE MINIMIZED. STATE AND LOCAL LAWS CONCERNING POLLUTION ABATEMENT SHALL BE COMPLIED WITH.
9. CONTRACTORS SHALL PROVIDE DUST CONTROL AS REQUIRED BY THE APPROPRIATE FEDERAL, STATE, AND LOCAL AGENCY REQUIREMENTS.
10. ALL ON-SITE FIRE HYDRANTS ARE TO REMAIN.
11. WITH THE APPROVAL OF THE TOWN INSPECTOR, EROSION AND SEDIMENT CONTROLS MAYBE REMOVED AFTER AREAS ABOVE THEM HAVE BEEN STABILIZED.
12. MAINTENANCE NOTES
    MAINTENANCE IS TO BE PERFORMED AS FOLLOWS:
    A. REPAIR DAMAGES CAUSED BY SOIL EROSION OR CONSTRUCTION AT THE END OF EACH WORKING DAY.
    B. SWALES SHALL BE INSPECTED PERIODICALLY AND MAINTAINED AS NEEDED.
    C. SEDIMENT TRAPS, BERMS, AND SWALES ARE TO BE INSPECTED AFTER EACH STORM AND REPAIRS MADE AS NEEDED.
    D. SEDIMENT SHALL BE REMOVED AND SEDIMENT TRAPS RESTORED TO ITS ORIGINAL DIMENSIONS WHEN SEDIMENT HAS ACCUMULATED TO A DEPTH OF ONE FOOT.
    E. SEDIMENT REMOVED FROM TRAP SHALL BE DEPOSITED IN A SUITABLE AREA AND IN SUCH A MANNER THAT IT WILL NOT ERODE.
    F. RILLS AND GULLIES MUST BE REPAIRED.

PROJECT NUMBER:
-

PROJECT ADDRESS:
40 W SUMMIT DR,
EMERALD HILLS, CA 94062

DRAWN FOR:
BOB JOHNSTON
40 W SUMMIT DR, EMERALD HILLS, CA 94062

DRAWN BY:
SARRAH RESHAMWALA
XAR DESIGNS
2110 STANFORD AVE, MOUNTAIN VIEW CA 94040
sarrah.reshamwala@gmail.com

FOR OFFICE USE ONLY:

SCALE AT ARCH D:

| REV | DATE | ISSUE |
|---|---|---|
| | 09/12/2024 | |
| 1 | | |
| 2 | | |
| | | |

SITE PLAN

**40 W SUMMIT DR.**
INTERIOR REMODEL & ADDITION

**A-02**

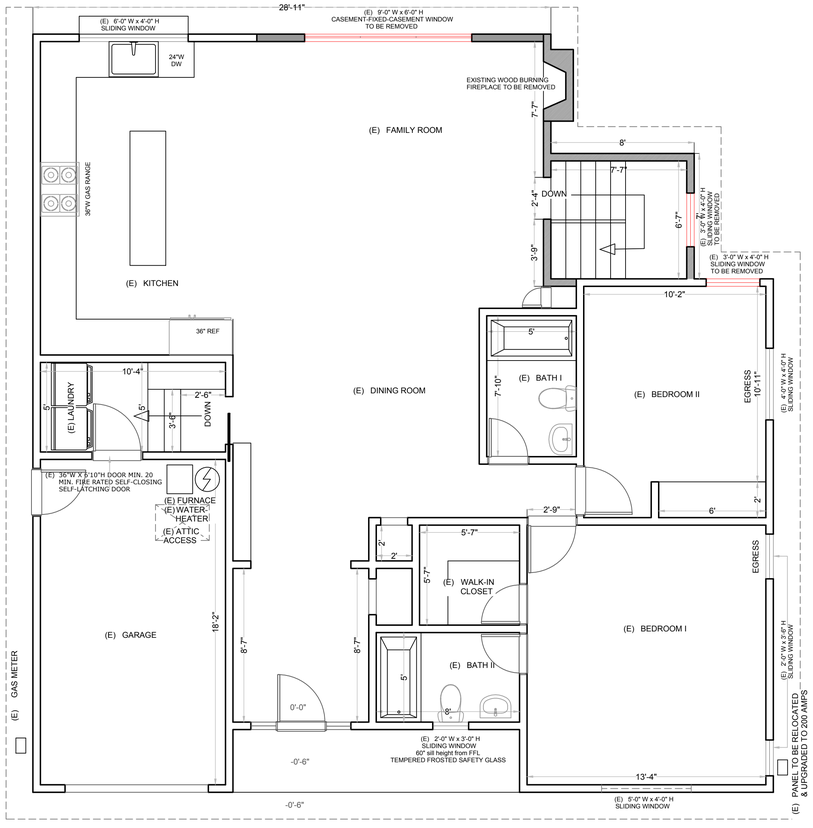


WALL KEY
EXISTING
NEW
DEMO

EXISTING MAIN LEVEL $\frac{1}{4}$" = 1'0"@ARCH B

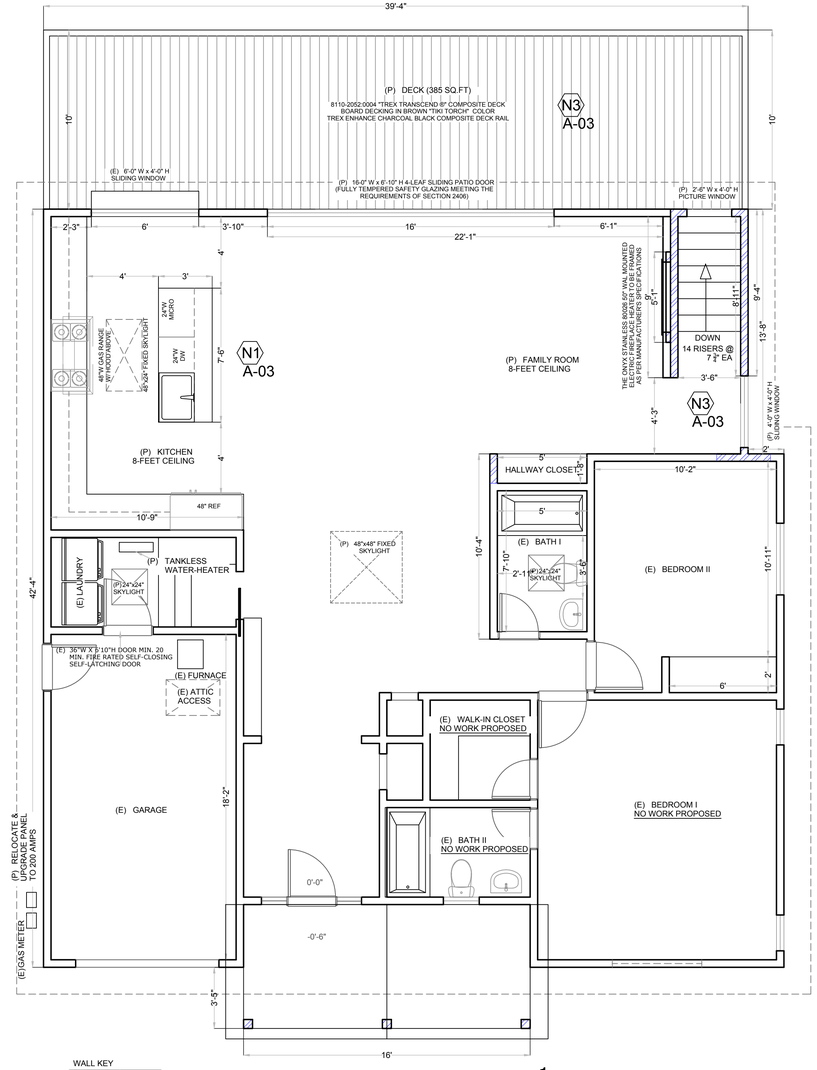


WALL KEY
EXISTING
NEW
DEMO

PROPOSED MAIN LEVEL $\frac{1}{4}$" = 1'0"@ARCH B

## GENERAL NOTES

N1 A-03

### KITCHEN NOTES:

1. CABINETRY SHOWN IS A CONCEPTUAL DEPICTION. ACTUAL FINAL CABINET DESIGN AND LAYOUT SHALL BE BY THE DESIGNER OF THE CABINET SUPPLIER AND COORDINATED WITH THE BUILDER, OWNERS, AND ACTUAL FIELD DIMENSIONS.
2. MINIMUM 30" CLEARANCE REQUIRED ABOVE KITCHEN RANGE, EXCEPT WHERE 24" IS ALLOWED PER CODE OR MANUFACTURE'S SPECIFICATION (CMC 916.1.2)
3. DISHWASHING MACHINE SHALL NOT BE DIRECTLY CONNECTED TO A DRAINAGE SYSTEM OR FOOD WASTE DISPOSER WITHOUT THE PROPER USE OF AN AIR GAP FITTING ON THE DISCHARGE SIDE OF THE MACHINE. (CPC 807.4)
4. THE GARBAGE DISPOSAL CORD IS LIMITED TO A RANGE OF 18" TO 36" LONG AS PER CEC 422.16(B)(1)
5. THE DISHWASHER CORD IS LIMITED TO A RANGE OF 36"-48" LONG. SHEATHED CABLE MAY NOT BE INSALLED WITH A PLUG. CEC 422.16(B)(2)
6. HOUSEHOLD COOKING APPLIANCES SHALL HAVE VERTICAL CLEARANCE ABOVE THE COOKING TOP OF NOT LESS THAN 30" TO COMBUSTIBLE MATERIAL OR METAL CABINETS.
7. EXHAUST DUCTS SHALL TERMINATE OUTSIDE THE BUILDING AND SHALL BE EQUIPPED WITH A BACK-DRAFT DAMPER PER CMC SECTION 504.1.
8. RECEPTACLES SHALL BE LOCATED NO MORE THAN 20" ABOVE COUNTERTOP.
9. AS PER ASHRAE 62.2 §5.1, AN HVI OR AHAM CERTIFIED KITCHEN RANGE HOOD MEETING MINIMUM AIRFLOW AND SOUND RATINGS TO BE INSTALLED. THE SOUND RATING MUST BE EQUAL OR LESS THAN 3.0 SONES MEASURED AT NO LESS THAN 100 CFM. THE KITCHEN RANGE HOODS MUST BE VERIFIED BY A HERS RATER.
10. AS PER CALIFORNIA CIVIL CODE ARTICLE 1101.4 AND CALGREEN SECTION 301.1, ALL FIXTURES WILL MEET THE COMPLIANT FLOW RATES.
    - KITCHEN FAUCET FLOW RATE SHALL NOT EXCEED 1.8 GPM @60 PSI

N2 A-03

### DOORS, WINDOWS NOTES

1. AS PER 2022 TITLE 24 FOR RESIDENTIAL BUILDINGS:
   1.1. THE MAXIMUM U-FACTOR FOR WINDOWS WILL BE 0.30
   1.2. THE MAXIMUM SHGC WILL BE 0.23
   1.3. THE MAXIMUM U-FACTOR FOR DOORS WITH LESS THAN 25% GLAZING WILL BE 0.20.
2. AS PER 2022 BUILDING ENERGY EFFICIENCY STANDARDS FOR LOW-RISE RESIDENTIAL BUILDINGS
   **ALL WINDOWS MUST MEET THE MANDATORY REQUIREMENTS OF §110.6 & §110.7**
   -AS PER §150.0(Q): THE WEIGHTED AVERAGE U-FACTOR OF ALL FENESTRATION, INCLUDING SKYLIGHT PRODUCTS, SHALL NOT EXCEED 0.58.
   -AS PER §110.7 – MANDATORY REQUIREMENTS TO LIMIT AIR LEAKAGE
   ALL JOINTS, PENETRATIONS AND OTHER OPENINGS IN THE BUILDING ENVELOPE THAT ARE POTENTIAL SOURCES OF AIR LEAKAGE SHALL BE CAULKED, GASKETED, WEATHER STRIPPED, OR OTHERWISE SEALED TO LIMIT INFILTRATION AND EXFILTRATION.
4. LANDING REQUIREMENT AND NOTE:
   DOORS OTHER THAN REQUIRED EGRESS DOOR SHALL BE PROVIDED WITH LANDINGS OR FLOORS NOT MORE THAN 7 3/4" BELOW THE TOP OF THE THRESHOLD.
   THE WIDTH OF EACH LANDING SHALL BE NOT LESS THAN THE DOOR SERVED.
   EVERY LANDING SHALL HAVE A DIMENSION NOT LESS THAN 36 INCHES MEASURED IN THE DIRECTION OF TRAVEL.
   THE SLOPE AT EXTERIOR LANDINGS SHALL NOT EXCEED ¼ UNIT VERTICAL IN 12 UNITS HORIZONTAL (2 PERCENT).
5. ALL WINDOWS SHALL BE MINIMUM DUAL PANE UNLESS OTHERWISE NOTED. SAFETY GLASS TO BE PROVIDED IN ACCORDANCE TO CRC R308.
6. **EGRESS WINDOW** REQUIREMENTS:
   -THE BOTTOM OF THE EGRESS WINDOW OPENING CANNOT EXCEED 44" FROM THE FINISHED FLOOR.
   -THE MINIMUM OPENING AREA OF THE EGRESS WINDOW IS 5.7 SQUARE FEET.
   -THE MINIMUM EGRESS WINDOW OPENING HEIGHT IS 24" HIGH.
   -THE MINIMUM EGRESS WINDOW OPENING IS 20" WIDE.
7. WINDOW OPENING CONTROL DEVICES SHALL NOT BE MORE THAN 70 INCHES ABOVE FINISHED FLOOR. R310
8. SKYLIGHTS WITH PANES 16 SQ. FT. OR LESS LOCATED IN AN AREA WHERE THE HIGHEST POINT OF THE GLASS IS NOT MORE THAN 12' ABOVE A WALKING SURFACE OR OTHER ACCESSIBLE AREA SHALL HAVE LAMINATED GLASS WITH THE INTERLAYER THICKNESS A MIN. 0.030 INCH OR OTHER TYPES CAN BE FULLY TEMPERED, HEAT STRENGTHENED GLASS, WIRED GLASS OR APPROVED RIGID PLASTICS. FOR FULLY TEMPERED OR HEAT-STRENGTHENED GLASS A RETAINING SCREEN THAT IS CAPABLE OF SUPPORTING TWICE THE WEIGHT OF THE GLAZING AND HAVING A MESH OPENING OF NO MORE THAN 1" X 1" SHALL BE INSTALLED BELOW THE GLASS. CRC R308.6.2 & R308.6.

### DECK, STAIRS NOTES (INCLUDING WUI):

N3 A-03

1. **ALL WALKING SURFACE MATERIAL OF DECKS, PORCHES, BALCONIES AND STAIRS SHALL COMPLY WITH THE REQUIREMENTS OF 2022 CBC SECTION 7A AND THE 2022 CRC SECTION R337**
2. AS PER 709A.3, THE WALKING SURFACE MATERIAL OF DECKS, PORCHES, BALCONIES AND STAIRS SHALL BE CONSTRUCTED WITH ONE OF THE FOLLOWING MATERIALS:
   -MATERIAL THAT COMPLIES WITH THE PERFORMANCE REQUIREMENTS OF SECTION 709A.4 WHEN TESTED IN ACCORDANCE WITH BOTH ASTM E2632 AND ASTM E2726.
   -IGNITION-RESISTANT MATERIAL THAT COMPLIES WITH THE PERFORMANCE REQUIREMENTS OF 704A.3 WHEN TESTED IN ACCORDANCE WITH ASTM E84 OR UL 723.
3. **ALL DECKING MATERIALS AND INSTALLATION TO COMPLY WITH WUI REQUIREMENTS AND CRC CHAPTER 7A**: MATERIALS AND CONSTRUCTION METHODS FOR EXTERIOR WILDFIRE EXPOSURE
4. **AS PER CRC 707A.3 FOR EXTERIOR WALLS**
   THE EXTERIOR WALL COVERING OR WALL ASSEMBLY SHALL COMPLY WITH ONE OF THE FOLLOWING REQUIREMENTS:
   1. NONCOMBUSTIBLE MATERIAL.
   2. IGNITION-RESISTANT MATERIAL.
   3. SAWN LUMBER OR GLUE LAMINATED WOOD WITH THE SMALLEST MINIMUM NOMINAL DIMENSION OF 4 INCHES (102 MM), SAWN OR GLUE-LAMINATED PLANKS SPLINED, TONGUE-ANDGROOVE, OR SET CLOSE TOGETHER AND WELL SPIKED.
   4. LOG WALL CONSTRUCTION ASSEMBLY.
5. WALL ASSEMBLIES THAT HAVE BEEN TESTED IN ACCORDANCE WITH THE TEST PROCEDURES FOR A 10-MINUTE DIRECT FLAME CONTACT EXPOSURE TEST SET FORTH IN ASTM E2707 WITH THE CONDITIONS OF ACCEPTANCE SHOWN IN SECTION 707A.3.1.
6. WALL ASSEMBLIES THAT MEET THE PERFORMANCE CRITERIA IN ACCORDANCE WITH THE TEST PROCEDURES FOR A 10-MINUTE DIRECT FLAME CONTACT EXPOSURE TEST SET FORTH IN SFM STANDARD 12-7A-1.
7. AS PER CRC R337.7.9, THE EXPOSED UNDERSIDE OF EXTERIOR DECK AND STAIRS SHALL BE PROTECTED BY ONE OF THE FOLLOWING.
   1.1. NONCOMBUSTIBLE MATERIAL.
   1.2. IGNITION-RESISTANT MATERIAL.
   1.3. ONE LAYER OF 5/8-INCH TYPE X GYPSUM SHEATHING APPLIED BEHIND AN EXTERIOR COVERING ON THE UNDERSIDE OF THE FLOOR PROJECTION.
   1.4. THE EXTERIOR PORTION OF A 1-HOUR FIRE RESISTIVE EXTERIOR WALL ASSEMBLY APPLIED TO THE UNDERSIDE OF THE FLOOR INCLUDING ASSEMBLIES USING THE GYPSUM PANEL AND SHEATHING PRODUCTS LISTED IN THE GYPSUM ASSOCIATION FIRE RESISTANCE DESIGN MANUAL.
   1.5. THE UNDERSIDE OF A FLOOR ASSEMBLY THAT MEETS THE PERFORMANCE CRITERIA IN ACCORDANCE WITH THE TEST PROCEDURES SET FORTH IN EITHER OF THE FOLLOWING:
   a. SFM STANDARD 12-7A-3; OR
   b. ASTM E2957

### STAIRWAY NOTES:

**STAIRWAYS MUST MEET THE REQUIREMENTS OF CRC R311.7**

1. AS PER CRC R311.7.1 STAIRWAYS SHALL BE NOT LESS THAN 36 INCHES (914 MM) IN CLEAR WIDTH AT ALL POINTS ABOVE THE PERMITTED HANDRAIL HEIGHT AND BELOW THE REQUIRED HEADROOM HEIGHT.
2. AS PER R311.7.5.1 THE RISER HEIGHT SHALL BE NOT MORE THAN 73/4 INCHES (196 MM).
3. AS PER R311.7.5.2 THE TREAD DEPTH SHALL BE NOT LESS THAN 10 INCHES (254 MM).
4. AS PER R311.7.6 THERE SHALL BE A LANDING AT THE BOTTOM OF EACH STAIRWAY. THE WIDTH PERPENDICULAR TO THE DIRECTION OF TRAVEL SHALL BE NOT LESS THAN THE WIDTH OF THE FLIGHT SERVED.
5. AS PER R311.7.7 THE WALKING SURFACE OF TREADS AND LANDINGS OF STAIRWAYS SHALL BE SLOPED NOT STEEPER THAN ONE UNIT VERTICAL IN 48 INCHES HORIZONTAL (2-PERCENT SLOPE).
6. AS PER R311.7.8 HANDRAILS SHALL BE PROVIDED ON NOT LESS THAN ONE SIDE OF EACH
   CONTINUOUS RUN OF TREADS OR FLIGHT WITH FOUR OR MORE RISERS.
7. AS PER R311.7.8.1 HANDRAIL HEIGHT, MEASURED VERTICALLY FROM THE SLOPED PLANE
   ADJOINING THE TREAD NOSING, OR FINISH SURFACE OF RAMP SLOPE, SHALL BE NOT LESS THAN 34 INCHES (864 MM) AND NOT MORE THAN 38 INCHES (965 MM).
8. HANDRAILS SHALL COMPLY WITH SECTION R311.7.8.3.
9. AS PER R311.7.9 STAIRWAYS SHALL BE PROVIDED WITH ILLUMINATION IN ACCORDANCE WITH SECTION R303.7.

PROJECT NUMBER:
-

PROJECT ADDRESS:
40 W SUMMIT DR,
EMERALD HILLS, CA 94062

DRAWN FOR:
BOB JOHNSTON
40 W SUMMIT DR, EMERALD HILLS, CA 94062

DRAWN BY:
SARRAH RESHAMWALA
XAR DESIGNS
2110 STANFORD AVE, MOUNTAIN VIEW CA 94040
sarrah.reshamwala@gmail.com

FOR OFFICE USE ONLY:

SCALE AT ARCH D:

| REV | DATE | ISSUE |
|---|---|---|
| | 09/12/2024 | |
| 1 | | |
| 2 | | |

MAIN LVL PLANS

**40 W SUMMIT DR.**
INTERIOR REMODEL & ADDITION

**A-03**

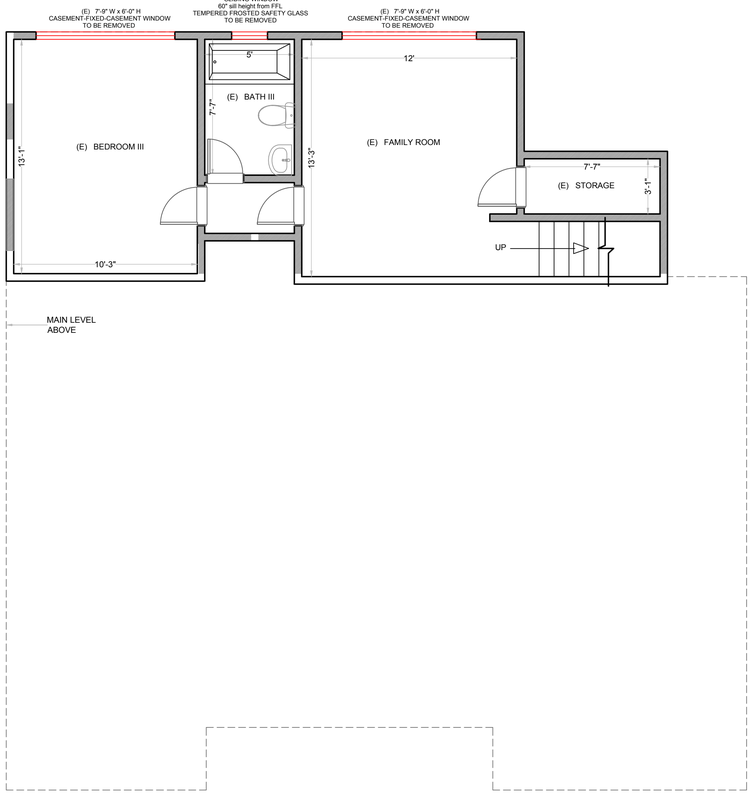


WALL KEY
EXISTING
NEW
DEMO

EXISTING LOWER LEVEL $\frac{1}{4}$"=1'0"@ARCH B

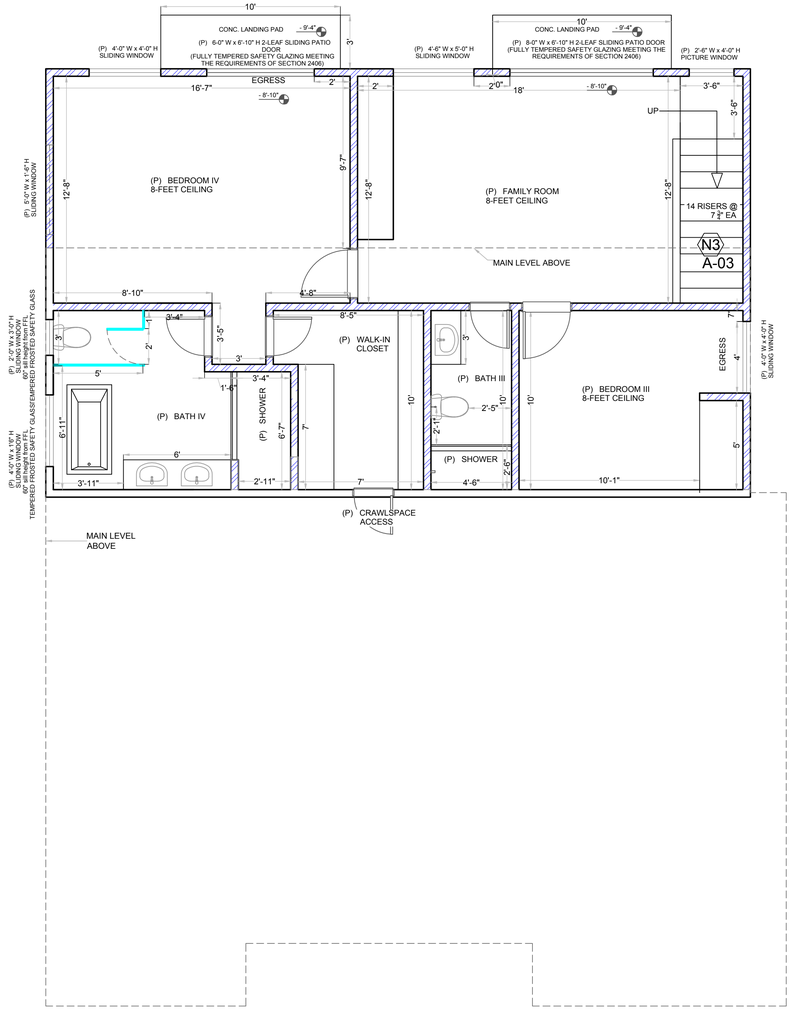


WALL KEY
EXISTING
NEW
DEMO

PROPOSED LOWER LEVEL $\frac{1}{4}$"=1'0"@ARCH B

## GENERAL NOTES

### TITLE 24:

NOTE:THIS IS NOT A DETAILED SUMMARY OF THE TITLE 24 REPORT. PLEASE REVIEW ACTUAL TITLE 24 REPORT IN DETAILS.
- R-38 INSULATION AT THE CEILING IN VENTED ATTIC;
- R-38 INSULATION AT THE CEILING IN 2X12 RAFTERS (UNDERSIDE OF THE DECK);
- R-15 INSULATION IN NEW AND ALTERED EXTERIOR WALLS (2X4 FRAMING);
- R-19 INSULATION AT THE FLOOR (2X6) IN CRAWLSPACE;
- WALLS SEPARATING GARAGE FROM THE HOUSE MUST BE INSULATED WITH MINIMUM R-15 IN 2X4 FRAMING (IF ALTERED);
- NEW WINDOWS MUST BE NFRC LABELED U-FACTOR=0.30 SHGC=0.23;
- NEW GLASS DOORS MUST BE NFRC LABELED U-FACTOR=0.30 SHGC=0.23;
- NEW WOOD DOOR MUST BE NFRC LABELED U-FACTOR=0.2;
- NEW SKYLIGHTS MUST BE NFRC LABELED U-FACTOR=0.44 SHGC=0.25
- WATER HEATER MUST BE TANKLESS TYPE; GAS; CONDENSING; HIGH EFFICIENCY 95% AFUE (UEF RATED);
- HVAC SYSTEM IS EXISTING TO REMAIN;
- FOR ALTERED DUCTWORK; DUCTS LOCATION = ATTIC; DUCT INSULATION = R-6;

### BEDROOM:

1. NEW BEDROOMS SHALL MEET NATURAL LIGHT AND VENT REQUIREMENTS AS PER CRC R303.1
2. EGRESS WINDOW SHALL COMPLY WITH THE REQUIREMENTS OF CRC SECTION R310.1-R310.2

### WILDLAND-URBAN INTERFACE FIRE ZONE:

1. A FUEL BREAK OR DEFENSIBLE SPACE IS REQUIRED AROUND THE PERIMETER OF THE STRUCTURE TO A DISTANCE OF NOT LESS THAN 30 FEET AND BY BE REQUIRED TO A DISTANCE OF 100 FEET OR TO THE PROPERTY LINE. THIS IS NEITHER A REQUIREMENT NOR AN AUTHORIZATION FOR THE REMOVAL OF LIVING TREES. TREES LOCATED WITHIN THE DEFENSIBLE SPACE SHALL BE PRUNED TO REMOVE DEAD AND DYING PORTIONS, AND LIMBED UP 6 FEET ABOVE THE GROUND. NEW TREE PLANTED IN THE DEFENSIBLE SPACE SHALL BE LOCATED NO CLOSER THAN 10 FEET TO ADJACENT TREES WHEN FULLY GROWN OR AT MATURITY.
2. PRIOR TO BUILDING PERMIT FINAL APPROVAL, THE PROPERTY SHALL BE IN COMPLIANCE WITH THE VEGETATION MANAGEMENT REQUIREMENTS PRESCRIBED IN CALIFORNIA FIRE CODE SECTION 4906, INCLUDING CALIFORNIA PUBLIC RESOURCES CODE 4291 OR CALIFORNIA GOVERNMENT CODE SECTION 51182 PER CRC R337.1.5
3. AS PER 504.7 APPENDAGES AND PROJECTIONS - UNENCLOSED ACCESSORY STRUCTURES ATTACHED TO BUILDINGS WITH HABITABLE SPACES AND PROJECTIONS, SUCH AS DECKS, SHALL NOT BE LESS THAT 1-HOUR FIRE-RESISTANCE RATED CONSTRUCTION, HEAVY TIMBER CONSTRUCTION, OR CONSTRUCTION OF ONE OF THE FOLLOWING;
   1. APPROVED NONCOMBUSTABLE MATERIALS.
   2.FIRE-RETARDENT-TREATED WOOD, IDENTIFIED FOR EXTERIOR USE AND MEETING THE REQUIREMENTS OF SECTION 2303.2 OF THE INTERNATIONAL BUILDING CODE.
   3. IGNITION-RESISTANT BUILDING MATERIALS IN ACCORDANCE WITH SECTION 503.2.

### STUCCO, EXTERIOR WALL

1. EXTERIOR PLASTER (STUCCO) SHALL BE A MINIMUM 3-COAT, 7/8 INCH THICK, SMOOTH, AND INSTALLED OVER TWO LAYERS OF GRADE D BUILDING PAPER AND WIRE LATH. LATH SHALL BE ATTACHED WITH ONE OF THE FOLLOWING METHODS:
   • WITH 1-1/2 INCH LONG, 11-GAGE NAILS, HAVING A 7/16 INCH HEAD,
   • 7/8 INCH LONG, 16 GAGE STAPLES, SPACED AT NO MORE THAN 6 INCHES
2. A MINIMUM 26 GAGE GALVANIZED SHEET METAL, CORROSION-RESISTANT **WEEP SCREED** WITH A MINIMUM VERTICAL ATTACHMENT FLANGE OF 3-1/2 INCHES SHALL BE PROVIDED AT OR BELOW THE FOUNDATION PLATE LINE ON EXTERIOR STUD WALLS. THE WEEP SCREED SHALL BE A MINIMUM OF 4 INCHES ABOVE EARTH OR 2 INCHES ABOVE PAVED AREAS. THE WATER-RESISTIVE BUILDING PAPER SHALL LAP THE ATTACHMENT FLANGE. THE EXTERIOR LATH SHALL COVER AND TERMINATE ON THE ATTACHMENT FLANGE OF THE WEEP SCREED.
3. PLASTER EXPANSION JOINTS SHOULD MEET THE FOLLOWING CRITERIA OR AS SHOWN ON THE DRAWINGS.
   A. NO LENGTH SHOULD BE GREATER THAN 18 FT. IN EITHER DIRECTION.
   B. NO PANEL SHOULD EXCEED 144 SQ. FT. FOR VERTICAL APPLICATIONS
   C. NO PANEL SHOULD EXCEED 100 SQ. FT. FOR HORIZONTAL, CURVED, OR ANGULAR SECTIONS
   D. NO LENGTH-TO-WIDTH RATIO SHOULD EXCEED 2 1/2 TO 1 IN ANY GIVEN PANEL.

PROJECT NUMBER:
-

PROJECT ADDRESS:
40 W SUMMIT DR,
EMERALD HILLS, CA 94062

DRAWN FOR:
BOB JOHNSTON
40 W SUMMIT DR, EMERALD HILLS, CA 94062

DRAWN BY:
SARRAH RESHAMWALA
XAR DESIGNS
2110 STANFORD AVE, MOUNTAIN VIEW CA 94040
sarrah.reshamwala@gmail.com

FOR OFFICE USE ONLY:

SCALE AT ARCH D:

| REV | DATE | ISSUE |
|---|---|---|
| | 09/12/2024 | |
| 1 | | |
| 2 | | |

LOWER LVL PLANS

**40 W SUMMIT DR.**
INTERIOR REMODEL & ADDITION

**A-04**

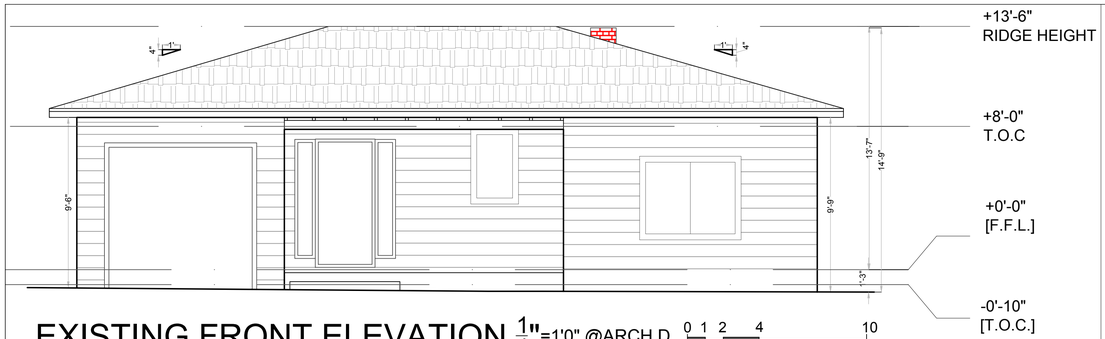


EXISTING FRONT ELEVATION $\frac{1}{4}$"=1'0" @ARCH D 0 1 2 4 10

PROPOSED FRONT ELEVATION $\frac{1}{4}$"=1'0" @ARCH D 0 1 2 4 10

(P) "CAPITAL SKY DUNE POINT" FLAT STONE VENEER WALL ON FRONT ELEVATION

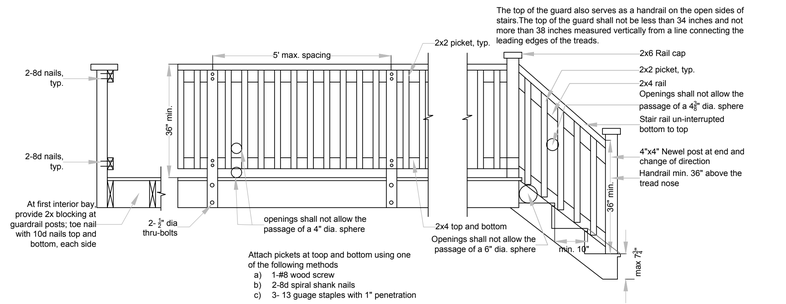


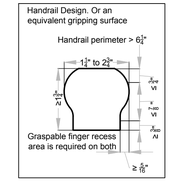


TYPICAL GUARDRAIL DETAILS $\frac{1}{2}$"=1'0"@ARCH D

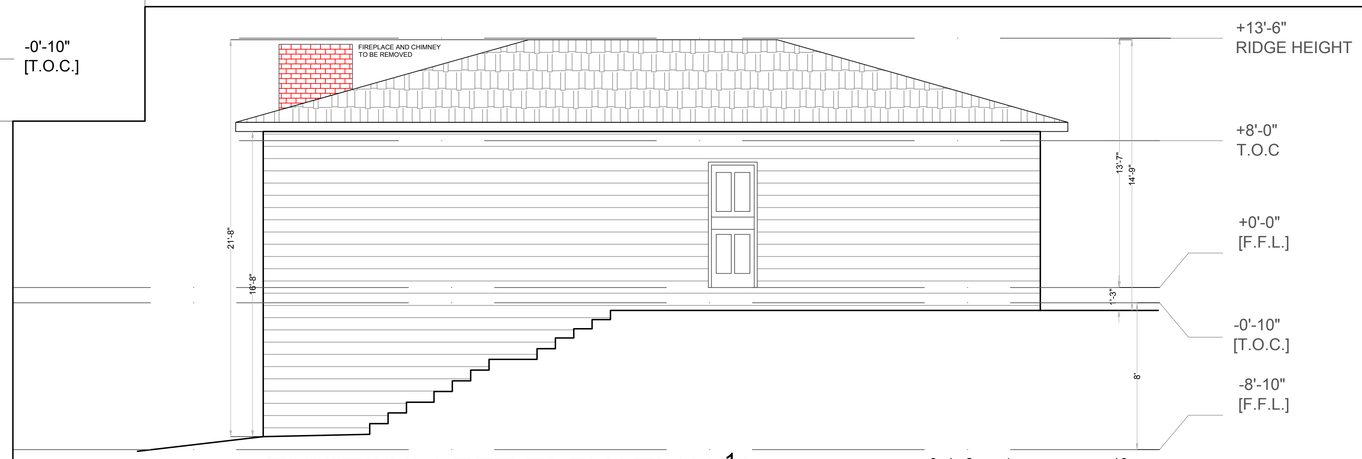


EXISTING LEFT ELEVATION $\frac{1}{4}$"=1'0" @ARCH D 0 1 2 4 10

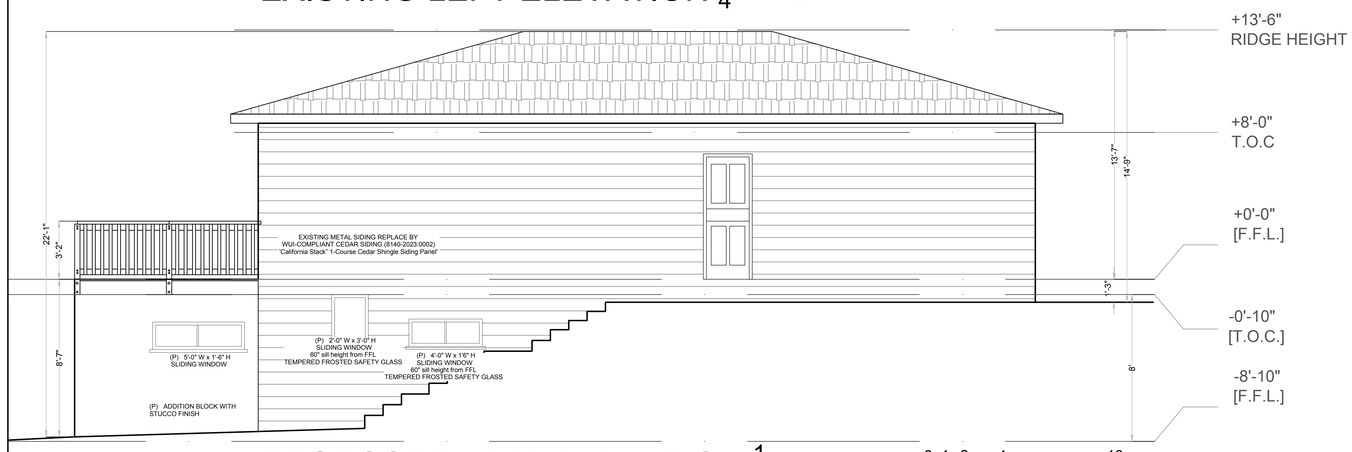


PROPOSED LEFT ELEVATION $\frac{1}{4}$"=1'0" @ARCH D 0 1 2 4 10

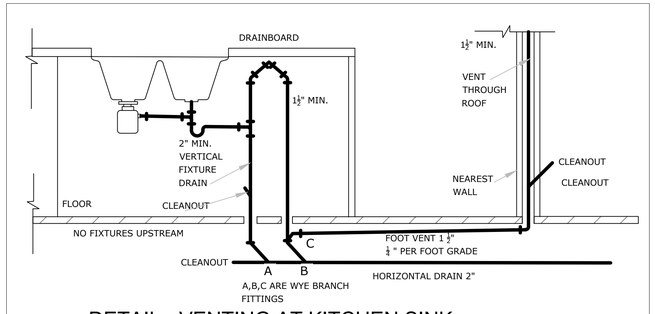


DETAIL - VENTING AT KITCHEN SINK
SCALE: 1/2"=1'-0"

PROJECT NUMBER:
-

PROJECT ADDRESS:
40 W SUMMIT DR,
EMERALD HILLS, CA 94062

DRAWN FOR:
BOB JOHNSTON
40 W SUMMIT DR, EMERALD HILLS, CA 94062

DRAWN BY:
SARRAH RESHAMWALA
XAR DESIGNS
2110 STANFORD AVE, MOUNTAIN VIEW CA 94040
sarrah.reshamwala@gmail.com

FOR OFFICE USE ONLY:

SCALE AT ARCH D:

| REV | DATE | ISSUE |
|---|---|---|
| | 09/12/2024 | |
| 1 | | |
| 2 | | |

ELEVATIONS I

**40 W SUMMIT DR.**
INTERIOR REMODEL & ADDITION

**A-05**

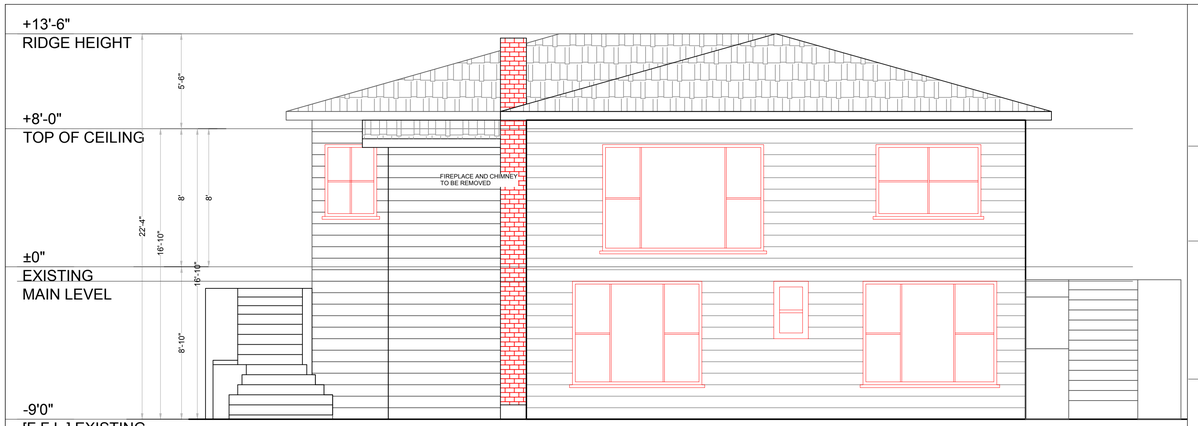


EXISTING REAR ELEVATION $\frac{1}{4}$"=1'0" @ARCH D

0 1 2 4 10

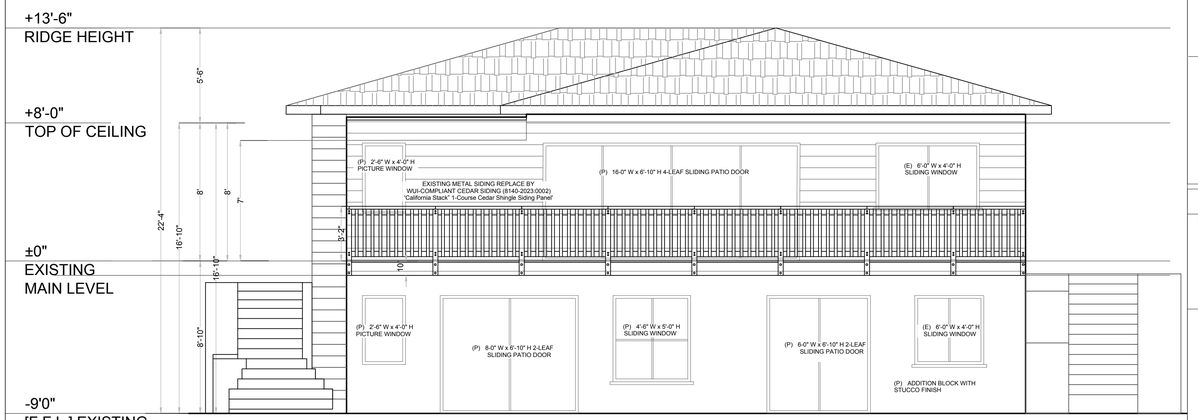


PROPOSED REAR ELEVATION $\frac{1}{4}$"=1'0" @ARCH D

0 1 2 4 10

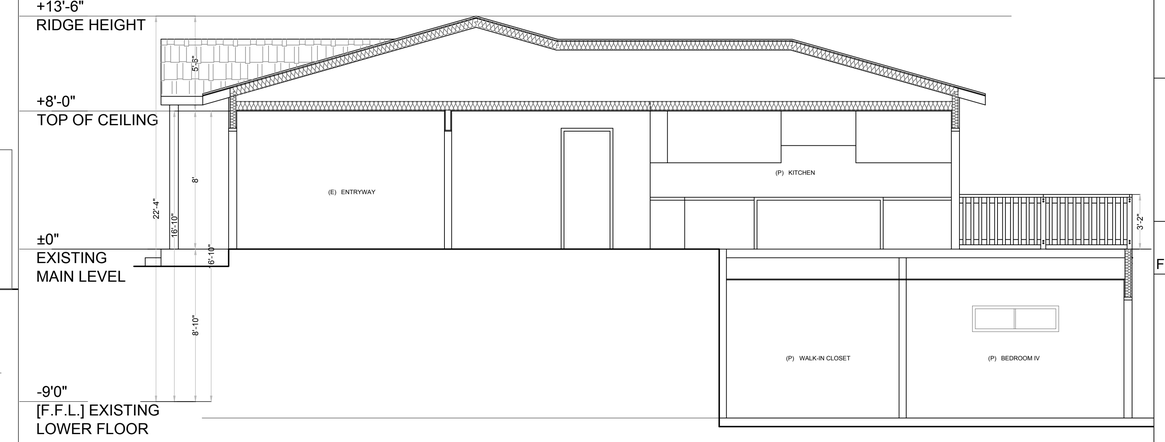


PROPOSED CROSS SECTION $\frac{1}{4}$"=1'0" @ARCH D

0 1 2 4 10

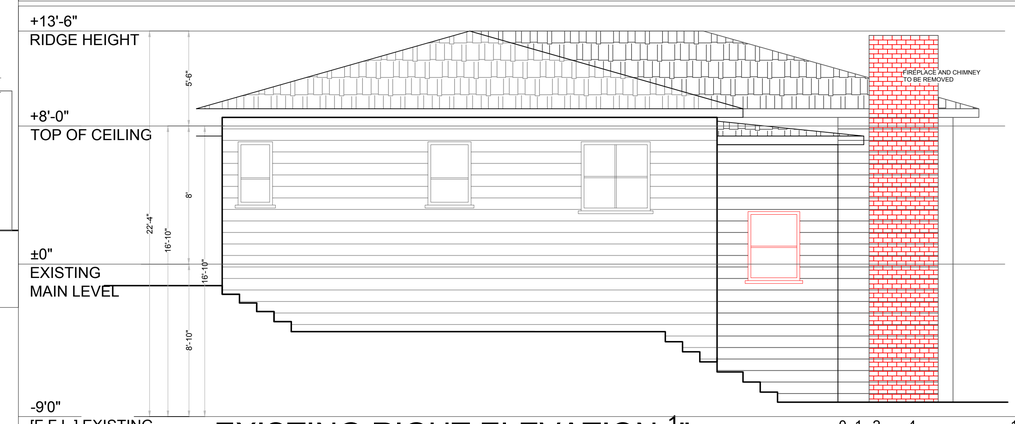


EXISTING RIGHT ELEVATION $\frac{1}{4}$"=1'0" @ARCH D

0 1 2 4 10

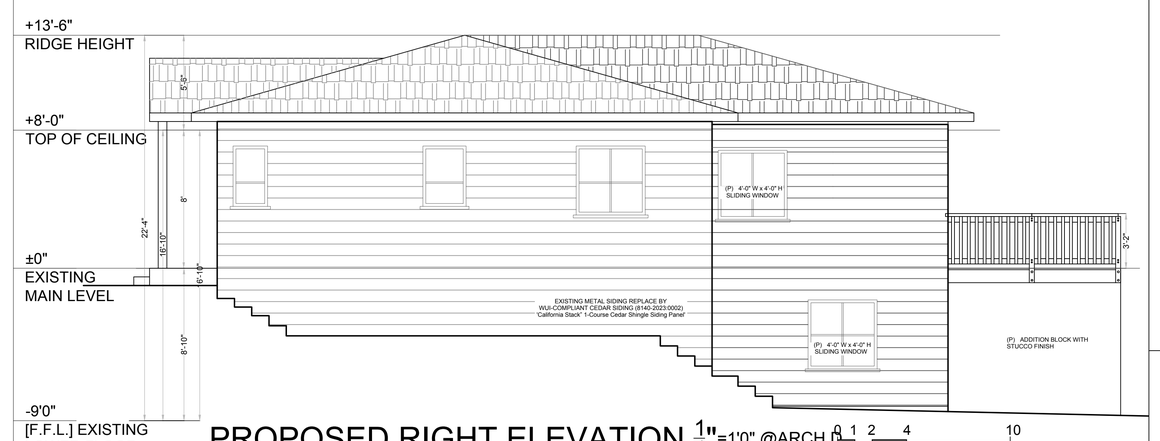


PROPOSED RIGHT ELEVATION $\frac{1}{4}$"=1'0" @ARCH D

0 1 2 4 10

PROJECT NUMBER:
-

PROJECT ADDRESS:
40 W SUMMIT DR,
EMERALD HILLS, CA 94062

DRAWN FOR:
BOB JOHNSTON
40 W SUMMIT DR, EMERALD HILLS, CA 94062

DRAWN BY:
SARRAH RESHAMWALA
XAR DESIGNS
2110 STANFORD AVE, MOUNTAIN VIEW CA 94040
sarrah.reshamwala@gmail.com

FOR OFFICE USE ONLY:

SCALE AT ARCH D:

| REV | DATE | ISSUE |
|---|---|---|
| | 09/12/2024 | |
| 1 | | |
| 2 | | |

ELEVATIONS II

**40 W SUMMIT DR.**
INTERIOR REMODEL & ADDITION

**A-06**

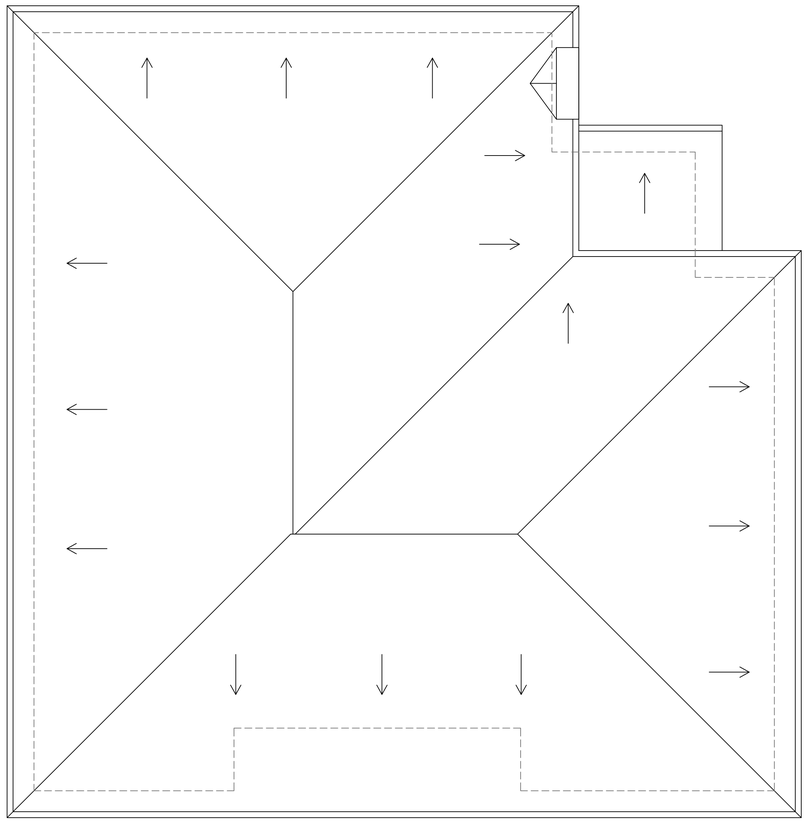

EXISTING ROOF PLAN $\frac{1}{4}$"=1'0"@ARCH B

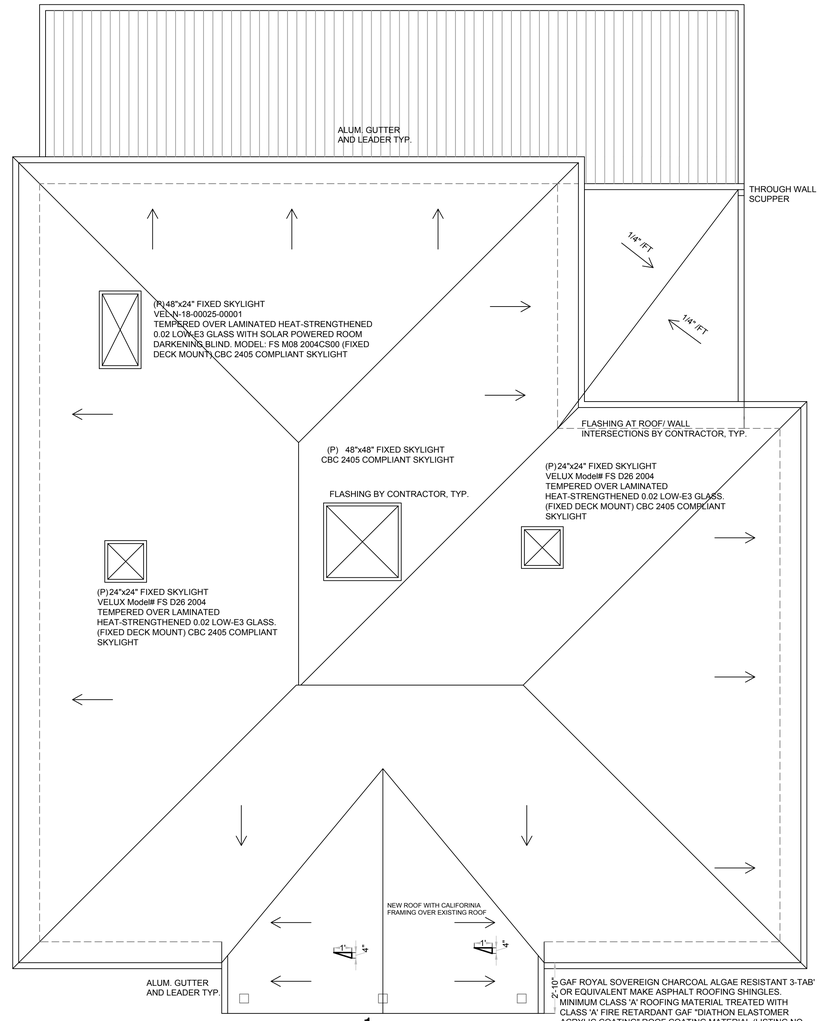


PROPOSED ROOF PLAN $\frac{1}{4}$"=1'0"@ARCH B

2x10" GAF ROYAL SOVEREIGN CHARCOAL ALGAE RESISTANT 3-TAB' OR EQUIVALENT MAKE ASPHALT ROOFING SHINGLES. MINIMUM CLASS 'A' ROOFING MATERIAL TREATED WITH CLASS 'A' FIRE RETARDANT GAF "DIATHON ELASTOMER ACRYLIC COATING" ROOF COATING MATERIAL (LISTING NO. 4175-0767:0101)

THE EXPOSED UNDERSIDE OF EXTERIOR PORCH CEILINGS SHALL BE PROTECTED BY ONE LAYER OF 5/8-INCH (16 MM) TYPE X GYPSUM SHEATHING APPLIED BEHIND THE EXTERIOR COVERING ON THE UNDERSIDE OF THE CEILING.

AS PER CRC R337.5.3, WHERE VALLEY FLASHING IS INSTALLED, THE FLASHING SHALL NOT BE LESS THAN NO. 26 GAGE GALVANIZED SHEET CORROSION-RESISTANT METAL INSTALLED OVER NOT LESS THAN ON LAYER OF MINIMUM 72-POUND MINERAL-SURFACED NON-PERFORATED CAP SHEET, AT LEAST 36 INCH WIDE RUNNING THE FULL LENGTH OF THE VALLEY.

ROOF GUTTERS SHALL BE PROVIDED WITH THE MEANS TO PREVENT THE ACCUMULATION OF LEAVES AND DEBRIS IN THE GUTTER PER CRC R337.5.4. (REFER DETAIL 1.0 SHOWN ALONGSIDE)

## GENERAL NOTES

### ROOF NOTES

1. CONTRACTOR SHALL VERIFY SIZES AND LOCATIONS OF ALL MECHANICAL EQUIPMENT, PLATFORMS AND BASES, POWER, WATER AND DRAIN LOCATIONS AND INSTALLATION REQUIREMENTS WITH EQUIPMENT MANUFACTURERS PRIOR TO PROCEEDING WITH WORK. CHANGES TO ACCOMMODATE FIELD CONDITIONS OR MATERIAL SUBSTITUTIONS SHALL BE MADE WITHOUT ADDITIONAL CHARGE TO OWNER.
2. MECHANICAL AND PLUMBING EQUIPMENT DIMENSIONS SHALL BE A MINIMUM OF 8 INCHES ABOVE ADJACENT ROOF ELEVATION.
3. VENTS THROUGH THE ROOF SHALL BE INSTALLED 10'-0" FROM AND TERMINATED 2'-0" ABOVE ANY FRESH AIR INTAKES.
4. ORIENT SKYLIGHT/SMOKE HATCH HINGES TOWARD THE PREVAILING WIND.
5. ALL ROOFING SHALL BE DESIGNED AND INSTALLED IN ACCORDANCE WITH LOCAL CITY AGENCY WIND DESIGN ORDINANCES.
6. PROVIDE ROOF FLASHING AT ALL WALL AND ROOF INTERSECTIONS, GUTTERS, AND WHERE THERE IS A CHANGE IN THE ROOF SLOPE OR DIRECTION AROUND ROOF OPENINGS. FLASHING SHALL BE A MINIMUM 26 GAUGE CORROSION-RESISTANT GALVANIZED METAL. (CBC 1507 AND CRC R905.2.8 – R905.2.8.4)
7. A CRICKET OR SADDLE SHALL BE INSTALLED ON THE RIDGES SIDE OF ANY CHIMNEY OR PENETRATION MORE THAN 30 INCHES WIDE AS MEASURED PERPENDICULAR TO THE SLOPE. CRICKET OR SADDLE COVERINGS SHALL BE SHEET METAL OR OF THE SAME MATERIAL AS THE ROOF COVERINGS. (CBC 1503.5 AND CRC R903.2.2)
8. DRIP EDGE: PROVIDE A DRIP EDGE AT EAVES AND GABLES OF ASPHALT SHINGLE ROOFS. ADJACENT PIECES OF THE DRIP EDGE SHALL BE OVERLAPPED A MINIMUM OF 2 INCHES. THE DRIP EDGE SHALL EXTEND ½ INCH BELOW THE ROOF SHEATHING AND A MINIMUM OF 2 INCHES UP THE ROOF DECK. THE DRIP EDGE SHALL BE MECHANICALLY FASTENED TO THE ROOF DECK AT A MAXIMUM OF 12 INCHES WITH APPROVED FASTENERS. THE UNDERLAYMENT SHALL BE INSTALLED OVER THE DRIP EDGE ALONG THE EAVES, AND UNDER THE DRIP EDGE AT GABLES (RAKE EDGES). SHINGLES CAN BE FLUSH WITH THE DRIP EDGE IF ALLOWED BY THE MANUFACTURER. (CBC 1507.2.8.3 AND CRC R905.2.8.5)
9. PROVIDE CROSS VENTILATION AT ALL ATTIC AND ENCLOSED RAFTER SPACES AS PER CBC 1202.2 AND CRC R806.2. THE NET FREE VENTILATION SHALL BE A MINIMUM RATIO OF 1:150 OF THE AREA OR SPACE VENTILATED.
10. FOR ROOF SLOPES BETWEEN 2:12 AND 4:12, TWO LAYERS OF UNDERLAYMENT MATERIAL SHALL BE APPLIED. A MINIMUM OF 19 INCH WIDE STRIP OF UNDERLAYMENT FELT SHALL BE APPLIED PARALLEL WITH AND STARTING AT THE EAVES. FASTENED SUFFICIENTLY TO HOLD IN PLACE. STARTING AT THE EAVE, 36 INCH WIDE SHEETS OF UNDERLAYMENT SHALL BE APPLIED OVERLAPPING SUCCESSIVE SHEETS 19 INCHES. FASTENED SUFFICIENTLY TO HOLD IN PLACE.
9. FASTENERS FOR THE ROOFING SHALL BE CORROSION RESISTANT AS PER CRC R905.2.5
10. ALL ROOF FLASHINGS TO BE PRIMED AND PAINTED WITH RUST PROOF PAINT.
11. OPERABLE SKYLIGHTS SHALL BE 10 FEET FROM ALL PLUMBING VENTS OR THE VENT SHALL TERMINATE 3 FEET ABOVE THE SKYLIGHT. OPERABLE SKYLIGHTS SHALL BE A MINIMUM OF 3 FEET FROM ANY ENVIRONMENTAL AIR VENT (I.E. STOVE HOOD, BATHROOM FAN, ETC.)

WUI COMPLIANCE:

1. WHERE THE ROOF PROFILE ALLOWS A SPACE BETWEEN THE ROOF COVERING AND THE ROOF DECKING, THE SPACES SHALL BE CONSTRUCTED TO PREVENT THE INTRUSION OF FLAMES AND EMBERS.
2. WHERE PROVIDED, VALLEY FLASHING MUST BE NOT LESS THAN 26 GAUGE GALVANIZED SHEET METAL OVER A 36-INCH WIDE NO. 72 ASTM CAP SHEET.
3. ROOF GUTTERS SHALL BE PROVIDED WITH THE MEANS TO PREVENT THE ACCUMULATION OF LEAVES AND DEBRIS IN THE GUTTER PER CRC R337.5.4.
4. THE EXPOSED UNDERSIDE OF EXTERIOR PORCH CEILINGS SHALL BE PROTECTED BY ONE LAYER OF 5/8-INCH (16 MM) TYPE X GYPSUM SHEATHING APPLIED BEHIND THE EXTERIOR COVERING ON THE UNDERSIDE OF THE CEILING.
5. **ALL NEW ROOFING MATERIAL AND ASSEMBLY SHALL BE NONCOMBUSTIBLE OR CLASS 'A' ROOFING ASSEMBLY.**

**ROOF VENT CALCULATIONS:** (ROOF OVER STAIRWELL ADDITION)

AS PER R806.2 THE MINIMUM NET FREE VENTILATING AREA SHALL BE 1/150 OF THE AREA OF THE VENTED SPACE.

ATTIC AREA UNDER PROPOSED NEW ROOF = 180 SQ.FT
REQUIRED VENT AREA = 180/150 = 1.2 SQ.FT = 172.8 SQ.INCH

86.4 SQ.INCH EXHAUST (RIDGE VENTS) AND 86.4 SQ.INCH INTAKE (ROOFTOP AIR INTAKE VENTS)
FOR EXHAUST: INSTALL 7 LINEAL FOOT OF GAF COBRA RIDGE VENT 3 WITH NET FREE VENTILATING AREA OF 12.5 SQ. INCHES/ LINEAL FOOT OR EQUIVALENT.
FOR INTAKE: INSTALL 2 PIECES OF GIBRALTAR CORROSION RESISTANT ALUMINUM SOFFIT VENT 12 IN. X 4 IN. OR EQUIVALENT

PROJECT NUMBER:
-

PROJECT ADDRESS:
40 W SUMMIT DR,
EMERALD HILLS, CA 94062

DRAWN FOR:
BOB JOHNSTON
40 W SUMMIT DR, EMERALD HILLS, CA 94062

DRAWN BY:

SARRAH RESHAMWALA
XAR DESIGNS
2110 STANFORD AVE, MOUNTAIN VIEW CA 94040
sarrah.reshamwala@gmail.com

FOR OFFICE USE ONLY:

SCALE AT ARCH D:

| REV | DATE | ISSUE |
|---|---|---|
| | 09/12/2024 | |
| 1 | | |
| 2 | | |

ROOF PLAN

**40 W SUMMIT DR.**
INTERIOR REMODEL & ADDITION

**A-07**

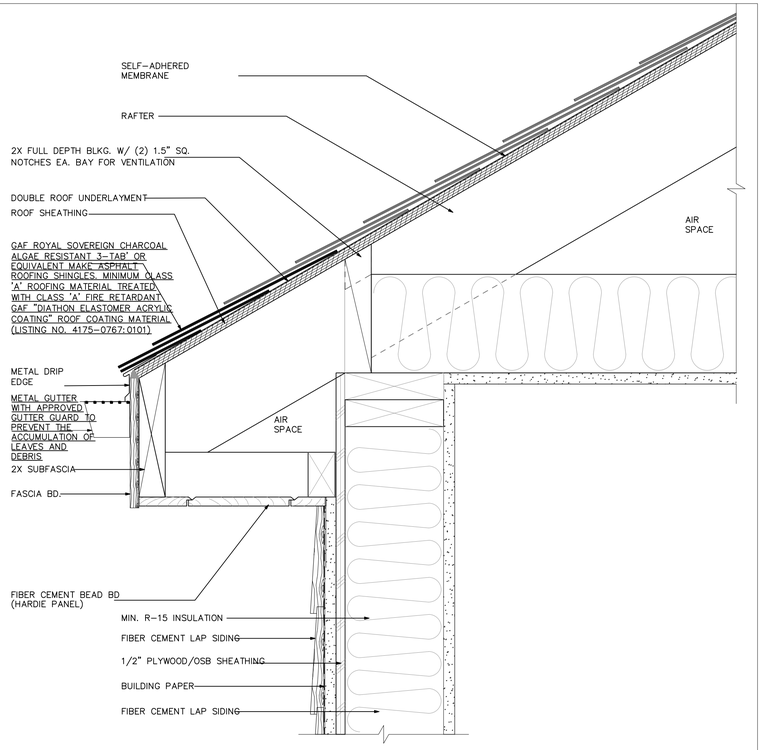


## R1 TYPICAL ROOF DETAIL
SCALE : 3"=1'-0"@ARCH D

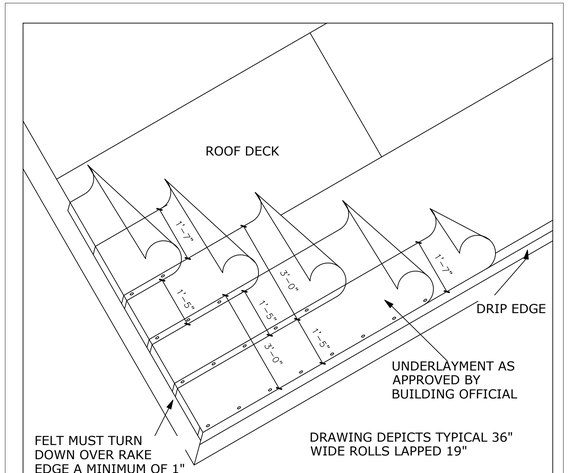


## R2 TYPICAL ROOF UNDERLAYMENT DETAIL
SCALE: 3"=1'-0"

1. ENSURE THAT THE ROOF DECK IS PROPERLY FASTENED, CLEAN AND SMOOTH BEFORE UNDERLAYMENT AND ROOF TILES ARE APPLIED.
2. VERIFY THAT THE ROOF DECK HAS NO SIGNIFICANT DELAMINATION, WARPAGE, BOWING, OR SEPARATION FROM THE RAFTERS OF THE TRUSSES. CHECK ROOF DECK ROT OF DAMAGE.
3. MAKE SURE REPAIRS ARE MADE TO THE ROOF DECK AS NECESSARY TO MEET LOCAL BUILDING CODES.
4. APPLY A HALF SHEET PARALLEL TO EAVE. FASTEN UNDERLAYMENT SUFFICIENT TO HOLD THE FELT IN PLACE.
5. COMPLETELY COVER THE STARTER SHEET WITH A FULL-WIDTH SHEET.
6. ONE LAYER OF NO. 30 ASPHALT-SATURATED FELT COMPLYING WITH ASTM D-226 TYPE II (ASTM D4869 TYPE IV) OR APPROVED EQUAL IS REQUIRED AS A MINIMUM UNDERLAYMENT ON ALL ROOF TILE APPLICATIONS. OTHER UNDERLAYMENTS AS APPROVED BY LOCAL BUILDING OFFICIALS ARE ALLOWED.
7. UNDERLAYMENT SHALL EXTEND A MINIMUM OF 4" UP VERTICAL WOOD BLOCKING OR WALL.
8. LAP SUCCEEDING SHEETS TO ENSURE DOUBLE LAYERS OVER ENTIRE ROOF. END LAPS SHALL BE A MINIMUM OF 6" VERTICAL LAP.

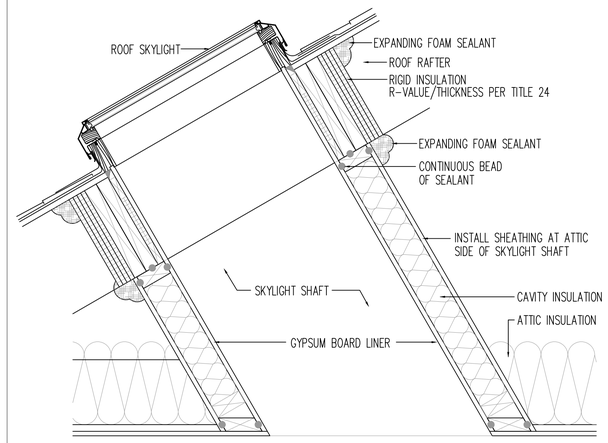


## R3 TYPICAL SKYLIGHT DETAIL
SCALE : 1 $\frac{1}{2}$"=1'-0"@ARCH D

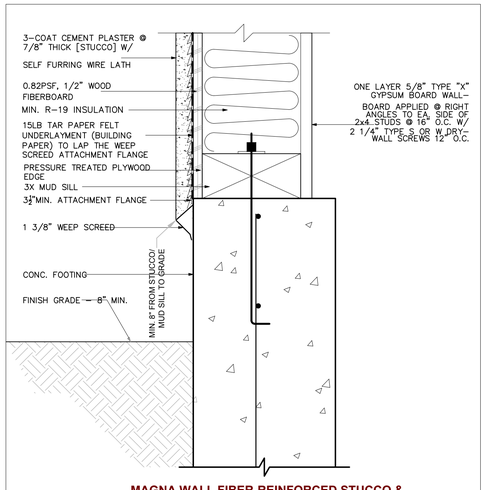


## R4 MAGNA WALL FIBER-REINFORCED STUCCO & WEEP SCREED ASSEMBLY PER ESR-2781
SCALE : 3"=1'-0"@ARCH D

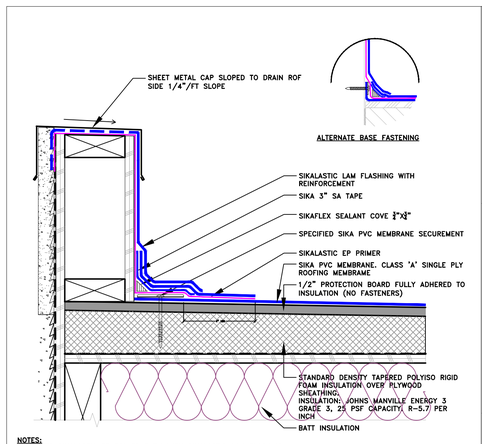


NOTES:
1) KEEP SIKALASTIC EP PRIMER EVEN WITH SIKALASTIC LAM FLASHING.

## R5 PARAPET FLASHING
SCALE : 3"=1'-0"@ARCH D

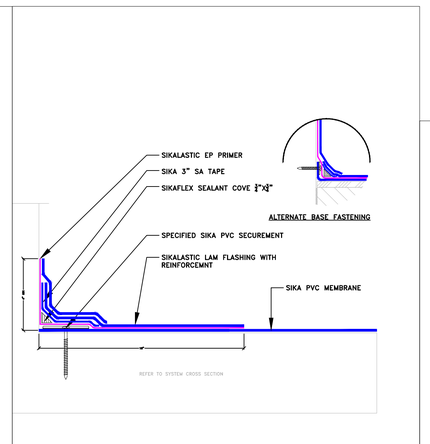


## R6 WALL FLASHING
SCALE : 3"=1'-0"@ARCH D

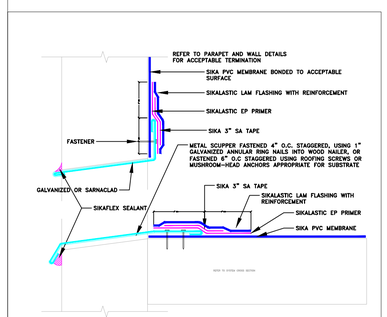


R7 THRU-WALL SCUPPER
SCALE : 3"=1'-0"@ARCH D

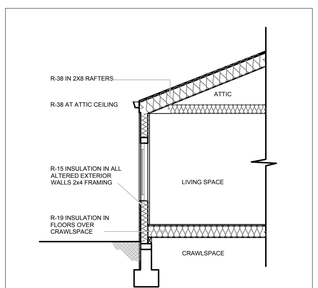


TYPICAL INSULATION DETAILS
$\frac{1}{4}$"=1'0"@ARCH D

PROJECT NUMBER:
-

PROJECT ADDRESS:
40 W SUMMIT DR,
EMERALD HILLS, CA 94062

DRAWN FOR:
BOB JOHNSTON
40 W SUMMIT DR, EMERALD HILLS, CA 94062

DRAWN BY:
SARRAH RESHAMWALA
XAR DESIGNS
2110 STANFORD AVE, MOUNTAIN VIEW CA 94040
sarrah.reshamwala@gmail.com

FOR OFFICE USE ONLY:

SCALE AT ARCH D:

| REV | DATE | ISSUE |
|---|---|---|
| | 09/12/2024 | |
| 1 | | |
| 2 | | |

DETAILS

40 W SUMMIT DR.
INTERIOR REMODEL & ADDITION

A-08

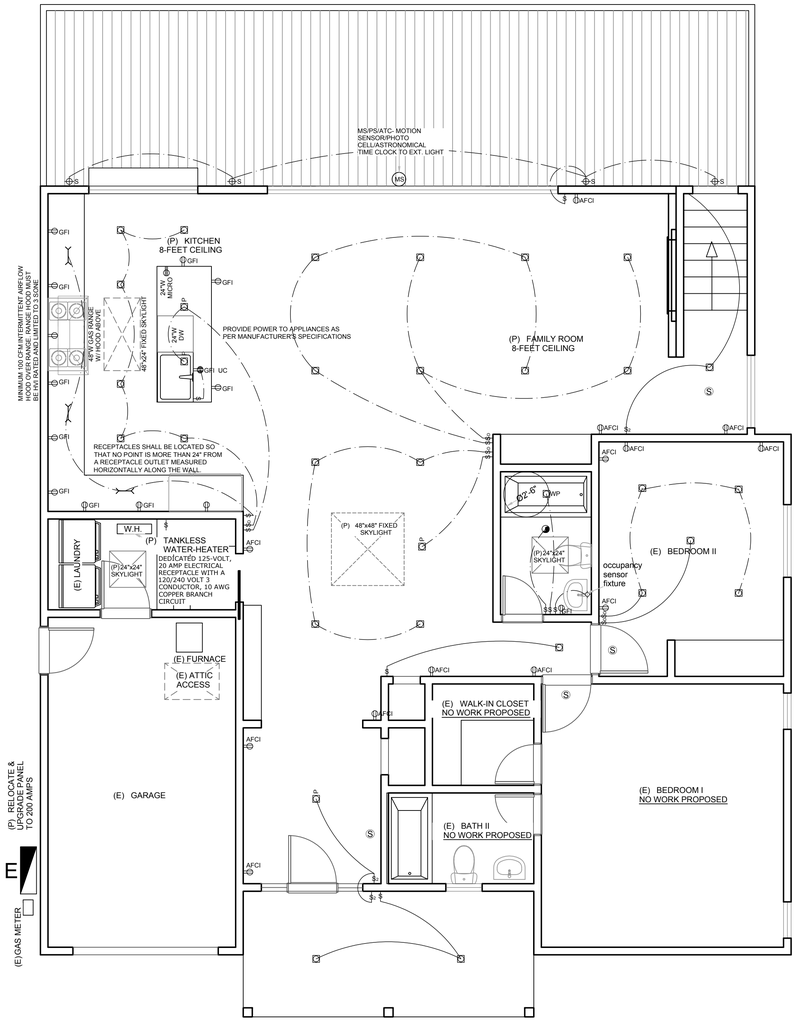


PROPOSED MAIN LEVEL $\frac{1}{4}$"=1'0"@ARCH B

## LEGEND

| | |
|---|---|
| WP | 110 VOLT DUPLEX WEATHERPROOF RECEPTACLE W/ GROUND FAULT INTERRUPTER |
| GFI | 110 VOLT DUPLEX RECEPTACLE W/ GROUND FAULT INTERRUPTER |
| AFCI | 110 VOLT DUPLEX RECEPTACLE W/ ARC FAULT INTERRUPTER |
| | 110 VOLT DUPLEX SWITCHED RECEPTACLE |
| 220 | 220 VOLT RECEPTACLE |
| S | WALL MOUNTED LIGHT FIXTURE / SCONCE |
| | RECESSED CAN LIGHT |
| P | CHANDELIER/ PENDANT LIGHT |
| | UNDER COUNTER LIGHT |
| $ | SINGLE POLE SWITCH |
| $D | SINGLE WITH DIMMER |
| $3 | TWO WAY SWITCH |
| E | ELECTRICAL MAIN PANEL |
| S | SMOKE & CARBONMONOXIDE DETECTOR COMBO |
| CLG | 110 VOLT DUPLEX RECEPTACLE IN CEILING |
| | MIN. 50 CFM INTERMITTENT AIRFLOW EXHAUST FAN |
| MS | MS/PS/ATC- MOTION SENSOR/PHOTO CELL/ ASTRONOMICAL TIME CLOCK TO EXT. LIGHT |

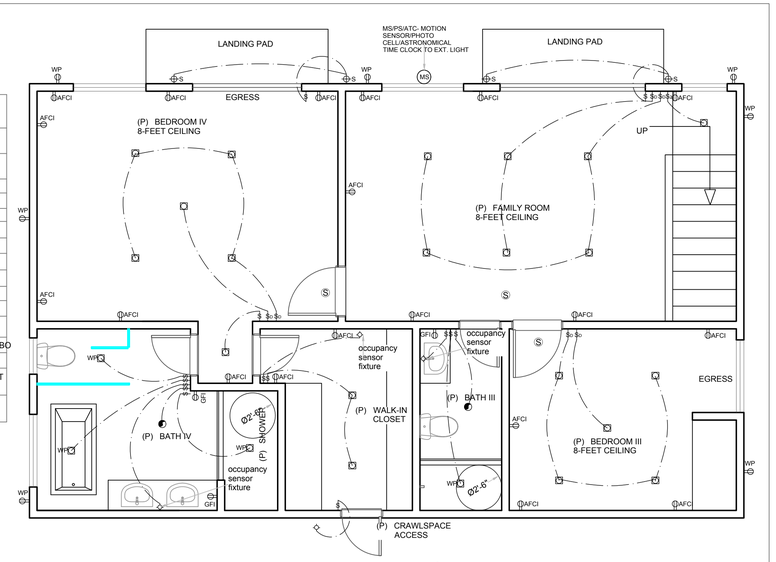


PROPOSED LOWER LEVEL $\frac{1}{4}$"=1'0"@ARCH B

## ELECTRICAL NOTES:

1. THIS ELECTRICAL PLAN IS A REPRESENTATION OF THE ARCHITECT'S LIGHTING AND FIXTURE
2. ALL ELECTRICAL INSTALLATION SHALL BE IN ACCORDANCE WITH THE LATEST EDITION OF NATIONAL ELECTRIC CODE (NEC), ELECTRIC SAFETY ORDERS, STATE OF CALIFORNIA AND ALL APPLICABLE LOCAL CODES.
3. ALL APPLIANCES TO BE ENERGY STAR, HIGH EFFICIENCY OR HIGH PERFORMANCE WHEREVER POSSIBLE.
4. ALL CANS IN INSULATED CEILINGS SHALL BE SEALED, INSULATED UNITS.
5. ALL ELECTRICAL BOXES FOR LIGHTING, SWITCHING AND POWER SHALL BE REVIEWED AND APPROVED BY OWNER PRIOR TO PULLING WIRE.
6. PROVIDE GFCI OUTLETS WHERE REQUIRED BY CODE. ALL RECEPTACLES THAT ARE NOT GFCI PROTECTED SHALL BE AFCI TYPE RECEPTACLES.
7. ARC-FAULT CIRCUIT INTERRUPTER (AFCI) PROTECTED RECEPTACLES SHALL BE INSTALLED IN KITCHENS, FAMILY ROOMS, DINING ROOMS, BEDROOMS, HALLWAYS, LAUNDRY AREAS, OR SIMILAR ROOMS OR AREAS AS PER CEC 210.12(A)
8. ALL 125 VOLT, 15 AND 20 AMPERE RECEPTACLE OUTLETS SHALL BE TAMPER RESISTANT RECEPTACLES PER CEC 406.12.

**BATHROOM:**

9. AS PER R303.4, EACH BATHROOM CONTAINING A BATHTUB, SHOWER OR TUB/SHOWER COMBINATION SHALL BE MECHANICALLY VENTILATED FOR PURPOSES OF HUMIDITY CONTROL. EXHAUST FANS WITH A MINIMUM VENTILATION RATE OF 50 CFM ARE REQUIRED.
10. A DEDICATED 20-AMP BRANCH CIRCUIT FOR THE BATHROOM RECEPTACLE OUTLETS. THIS CIRCUIT CANNOT SUPPLY ANY OTHER RECEPTACLES, LIGHTS, FANS, ETC. (EXCEPTION - WHERE THE CIRCUIT SUPPLIES A SINGLE BATHROOM, OUTLETS FOR OTHER EQUIPMENT WITHIN THE SAME BATHROOM SHALL BE ALLOWED.) CEC 210.11(C)(3).
11. AS PER CEC 150.0(K)2J, AT LEAST ONE FIXTURE IN EACH BATHROOM CONTROLLED BY A VACANCY SENSOR OR OCCUPANCY SENSOR PROVIDED THE OCCUPANCY SENSOR THAT IS INITIALLY PROGRAMED LIKE A VACANCY SENSOR (MANUAL-ON OPERATION).
12. ALL RECEPTACLES SHALL BE GFCI PROTECTED AND TAMPER RESISTANT. IF ANY NEW/ADDITIONAL OUTLETS ARE INSTALLED, THE BATHROOM SHALL HAVE A DEDICATED 20-AMP CIRCUIT. (CEC 210.8, 210.11, 406.12)
13. EXHAUST FANS AND LIGHTING SHALL HAVE SEPARATE CONTROL SWITCHES. THE EXHAUST FAN MAY NEED TO BE SUPPLIED BY A GFCI PROTECTED CIRCUIT BASED ON THE MANUFACTURER'S REQUIREMENTS. (CEES 150.0(K), 150.0(O))

## ELECTRICAL NOTES:

14. LIGHTING FIXTURES LOCATED WITHIN 3 FEET HORIZONTALLY AND 8 FEET VERTICALLY OF THE BATHTUB RIM OR SHOWER STALL THRESHOLD SHALL BE LISTED FOR WET LOCATIONS WHERE SUBJECT TO SHOWER SPRAY. (CEC 410.10)
15. AT LEAST ONE LIGHT FIXTURE SHALL BE CONTROLLED BY A VACANCY SENSOR SWITCH THAT REQUIRES A MANUAL ON ACTIVATION AND AUTOMATICALLY TURNS OFF WITHIN 30 MINUTES AFTER THE
16. ROOM IS VACATED. ALL OTHER LIGHT FIXTURES SHALL BE CONTROLLED BY A VACANCY SENSOR OR DIMMER.
17. ALL LIGHT FIXTURES SHALL CONTAIN BULBS THAT ARE LABELED AS JA8-2022 (JA8-2022-E FOR SEALED LENS OR RECESSED FIXTURE). SCREW BASE BULBS ARE PERMITTED, EXCEPT IN RECESSED LIGHTING FIXTURES.
18. ALL LIGHT FIXTURES SHALL CONTAIN BULBS THAT ARE LABELED AS JA8-2022 (JA8-2022-E FOR SEALED LENS OR RECESSED FIXTURE). SCREW BASE BULBS ARE PERMITTED, EXCEPT IN RECESSED LIGHTING FIXTURES.
19. RECESSED LIGHTING SHALL BE LISTED AS IC (ZERO CLEARANCE TO INSULATION) AND AT (AIR TIGHT), BE SEALED/CAULKED BETWEEN THE FIXTURE HOUSING AND CEILING. SHALL NOT CONTAIN A SCREW BASE SOCKET, AND CONTAIN BULBS MARKED WITH JA8-2022-E EFFICIENCY LABEL. (CEES 150.0(K))

**KITCHEN**:

1. A MINIMUM OF TWO 20-AMP SMALL APPLIANCE BRANCH CIRCUITS ARE REQUIRED TO SERVE COUNTERTOP AND WALL RECEPTACLES IN THE KITCHEN, PANTRY AND DINING ROOM (CEC 210.11A). NO BUILT-IN APPLIANCES ARE ALLOWED ON THESE CIRCUITS (EXCEPT AN ELECTRIC CLOCK OR THE IGNITION OF A GAS RANGE).
2. UNDER-CABINET LIGHTING MUST BE SWITCHED SEPARATELY FROM OTHER LIGHTING.[CNC 150.0(K)2L]
3. INDIVIDUAL (DEDICATED) CIRCUITS ARE REQUIRED FOR GARBAGE DISPOSALS, MICROWAVES, COMPACTORS, AND DISHWASHERS. [CEC210.19A1B]
4. GFCI PROTECTION SHALL BE PROVIDED FOR ALL COUNTERTOP RECEPTACLES, RECEPTACLES WITHIN 6 FEET OF A SINK, AND FOR RECEPTACLES SUPPLYING DISHWASHERS.
5. ALL OUTLETS AND DEVICES (I.E. RECEPTACLES, LIGHTING, HOODS, ETC.) IN THE KITCHEN SHALL BE AFCI PROTECTED AND TAMPER-RESISTANT.
6. COUNTERTOP RECEPTACLES SHALL BE LOCATED SO THAT NO POINT ALONG THE WALL IS MORE THAN 24 INCHES FROM A RECEPTACLE.
7. COUNTERTOP RECEPTACLES SHALL BE LOCATED NO MORE THAN 20 INCHES ABOVE THE COUNTERTOP.
9. ISLANDS/PENINSULAS SHALL HAVE AT LEAST ONE RECEPTACLE MOUNTED NOT MORE THAN 12 INCHES BELOW THE COUNTERTOP AND WHERE THE COUNTERTOP DOES NOT EXTEND MORE THAN 6 INCHES BEYOND ITS BASE.
10. ELECTRIC STOVES AND OVENS SHALL BE SUPPLIED WITH A 40- OR 50- AMP BRANCH CIRCUIT
11. A DEDICATED CIRCUIT IS REQUIRED FOR CORD AND PLUG CONNECTED RANGE EXHAUST HOODS.
12. SEPARATE CIRCUITS ARE REQUIRED FOR THE GARBAGE DISPOSAL, DISHWASHER, AND BUILT-IN MICROWAVE BASED ON THE MANUFACTURER'S REQUIREMENTS AND THE MOTOR RATING
13. AN HVI OR AHAM CERTIFIED KITCHEN RANGE HOOD WITH MINIMUM 100 CFM INTERMITTENT AIRFLOW AND SOUND RATINGS LIMITED TO 3 SONES. THE KITCHEN RANGE HOODS MUST BE VERIFIED BY A HERS RATER.

**LAUNDRY**:

1. A DEDICATED 20-AMP BRANCH CIRCUIT FOR THE LAUNDRY RECEPTACLE OUTLETS. CEC 210.11(C)(2) AND 210.52(F).
2. GFCI PROTECTION SHALL BE PROVIDED FOR OUTLETS THAT SUPPLY DISHWASHERS. CEC 210.8(D)

**EXTERIOR (OUTDOOR)**:

3. AS PER CEC 150.0(K)1E ANY NEW NIGHT LIGHTS, STEP LIGHTS, AND PATH LIGHTS MUST BE HIGH EFFICACY AND CONTROLLED BY A VACANCY SENSOR.
4. ALL OUTDOOR LIGHTING AS HIGH EFFICACY WITH MANUAL ON/OFF SWITCH AND ONE OF THE FOLLOWING IN ACCORDANCE WITH CEC 150.0(K)3:

I.A.PHOTOCONTROL AND MOTION SENSOR
II.B. PHOTOCONTROL AND AUTOMATIC TIME SWITCH CONTROL
III.C. ASTRONOMICAL TIME SWITCH CONTROL
III.D.ENERGY MANAGEMENT CONTROL SYSTEMS.

5. ALL EXTERIOR RECEPTACLES WILL BE WEATHER PROTECTED.

**WATER HEATER**:

6. A 120 V RECEPTACLE SHALL BE LOCATED WITHIN THREE (3) FEET OF THE WEH WATER HEATER AND SHALL BE ACCESSIBLE TO THE WATER HEATER WITH NO OBSTRUCTIONS. 150.0(N)
7. WHEN A GAS WATER HEATER IS USED, A DEDICATED 125-VOLT, 20 AMP ELECTRICAL RECEPTACLE MUST BE CONNECTED TO THE ELECTRIC PANEL WITH A 120/240 VOLT 3 CONDUCTOR, 10 AWG COPPER BRANCH CIRCUIT WITHIN 3 FEET FROM THE WATER HEATER. ADDITIONALLY, BOTH ENDS OF THE UNUSED CONDUCTOR SHALL BE LABELED "SPARE" AND A RESERVED SINGLE POLE BREAKER SPACE IN THE ELECTRICAL PANEL SHALL BE LABELED "FUTURE 240V USE". 150.0(N)1.

N9 E-01

## LIGHTING NOTES:

1. ALL LIGHTING TO BE HIGH EFFICACY AND MEET THE REQUIREMENTS OF SECTION 150.0(K) AND JOINT APPENDIX JA8.
2. ALL INTERIOR LIGHTING TO BE HIGH EFFICACY PER CEnC 150.0(K)1)(A)
3. ALL EXTERIOR LIGHTING TO BE HIGH EFFICACY AND BE CONTROLLED BY A MANUAL ON AND OFF SWITCH THAT DOES NOT OVERRIDE THE AUTOMATIC ACTIONS OF ITEMS SHOWN ON CEnC 150(K)(3)(ii) or CEnC 150.0(K)(3)(iii)
4. ALL LIGHTING FIXTURES SHALL BE CONTROLLED BY EITHER A DIMMER SWITCH OR BY A VACANCY SENSOR SWITCH THAT REQUIRES A MANUAL ON ACTIVATION (DOES NOT AUTOMATICALLY TURN ON) AND AUTOMATICALLY TURNS OFF WITHIN 30 MINUTES AFTER THE ROOM IS VACATED.
5. UNDER CABINET LIGHTING SHALL BE ON A SEPARATE SWITCH FROM ANY OTHER LIGHTING.
6. ALL LIGHT FIXTURES SHALL CONTAIN BULBS THAT ARE LABELED AS JA8-2022 (JA8-2022-E FOR SEALED LENS OR RECESSED FIXTURE). SCREW BASE BULBS ARE PERMITTED, EXCEPT IN RECESSED LIGHTING FIXTURES.
7. RECESSED LIGHTING SHALL BE LISTED AS IC (ZERO CLEARANCE TO INSULATION) AND AT (AIR TIGHT), BE SEALED/CAULKED BETWEEN THE FIXTURE HOUSING AND CEILING, SHALL NOT CONTAIN A SCREW BASE SOCKET, AND CONTAIN BULBS MARKED WITH JA8-2022-E EFFICIENCY LABEL. INCANDESCENT BULBS ARE NOT PERMITTED.
8. LUMINARIES RECESSED IN INSULATED CEILINGS SHALL COMPLY WITH THE FOLLOWING 150(K) 1C
   A. SHALL BE ZERO CLEARANCE IC LISTED AND CERTIFIED AIRTIGHT
   B. BE SEALED WITH GASKET OR CAULK BETWEEN LUMINARIES HOUSING AND CEILING AND AT ALL AIR LEAK PATHS BETWEEN CONDITIONED AND UNCONDITIONED SPACES.
   C. SHALL NOT CONTAIN SCREW BASE SOCKETS
9. EXTERIOR LIGHT TO ILLUMINATE THE TOP LANDING OF EXTERIOR STAIRS, PER CRC R303.8. LIGHTING TO BE HIGH-EFFICACY AND WEATHERPROOF WHILE MEETING CA ENERGY CODE SECTION 150.0(K)3
9. SCREW-BASED PERMANENTLY INSTALLED LIGHT FIXTURES THAT ARE JA8 COMPLIANT LIGHT SOURCES MUST BE MARKED AS "JA8-2022" OR "JA8- 2022-E" ("JA8-2022-E" LUMINAIRES ARE DEEMED APPROPRIATE FOR USE IN ENCLOSED LUMINAIRES).
10. AS PER CEC 150.0(K)11 ANY NEW LIGHT SOURCES INTEGRAL TO DRAWERS, CABINETS, AND LINEN CLOSETS MUST BE HIGH EFFICACY AND CONTROLLED BY A VACANCY SENSOR.
11. ALL JA8 COMPLIANT LIGHT SOURCES IN THE FOLLOWING LOCATIONS ARE CONTROLLED BY VACANCY SENSORS OR DIMMERS (EXCEPTION CLOSETS LESS THAN 70 SF AND HALLWAYS). CEC 150.0(K)(2K):
   I.A. CEILING RECESSED DOWNLIGHT LUMINAIRES.
   II.B. LED LUMINAIRES WITH INTEGRAL SOURCES.
   III.C. PIN-BASED LED LAMPS (I.E. MR16, AR-111, ETC.)
   IV.D. GU-24 BASED LED LIGHT SOURCES.

N10 E-01

## BATHROOM NOTES:

1. CEMENT BOARD OR BETTER SHALL BE USED AT ALL TILE LOCATIONS, TUBS, AND SHOWER STALLS. ALL SILLS, SEATS, & SHELVES IN SHOWER/TUB AREAS SHALL BE WATERPROOFED, TILED, & SLOPED TO DRAIN MIN. 1/4" PER FOOT.
2. UNDERLAYMENT MATERIAL USED AS BACKERS FOR WALL TILE OR SOLID SURFACE MATERIAL IN TUB AND SHOWER ENCLOSURES SHALL BE EITHER GLASS MAT/FIBER-REINFORCED GYPSUM BACKING PANELS (I.E. DENSSHIELD, DENS ARMOR PLUS), NON-ASBESTOS FIBER-CEMENT /FIBER MAT BACK BOARD (I.E. HARDIBACKER, CEMENT BOARD). ALL MATERIAL SHALL BE INSTALLED IN ACCORDANCE WITH THE MANUFACTURER'S RECOMMENDATIONS.
3. WATER-RESISTANT GYPSUM BOARD (I.E. PURPLE BOARD) MAY BE USED WHEN ATTACHED DIRECTLY TO STUDS, OVERLAID WITH MINIMUM GRADE B BUILDING PAPER AND WIRE LATH. TILE SHALL BE ATTACHED TO THE WIRE LATH. (CBC 2509 AND CRC R702.4).
4. BATHTUB, SHOWER FLOORS AND WALLS ABOVE BATHTUBS TO BE SMOOTH, HARD, NONABSORBENT SURFACE (CERAMIC TILE ) OVER A MOISTURE RESISTANT UNDERLAYMENT (CEMENT, FIBER CEMENT, OR GLASS MAT GYPSUM BACKER) TO A HEIGHT OF 72 INCHES ABOVE THE DRAIN INLET AS PER CRC R307 AND R702.3.8
5. SHOWER FLOORS SHALL BE LINED WITH AN APPROVED SHOWER PAN OR AN ON-SITE BUILT WATERTIGHT APPROVED LINING (I.E. HOT MOP). ON-SITE BUILT SHOWER LININGS SHALL EXTEND A MINIMUM OF 3 INCHES VERTICALLY UP THE WALL AND SHALL BE SLOPED ¼" PER FOOT TO WEEP HOLES. (CPC 408.7)IF 72 INCHES ABOVE THE DRAIN INLET AS PER CRC R307 AND R702.3.8
6. AS PER CPC 407, WATER CLOSET TO HAVE A MINIMUM 30 INCH WIDE CLEAR SPACE, AND EXTENDING AT LEAST 24 INCHES IN FRONT OF THE WATER CLOSET
7. AS PER CPC 418.0, SHOWER AND TUB-SHOWER COMBINATIONS SHALL HAVE INDIVIDUAL CONTROL VALVES OF THE PRESSURE BALANCE OR THE THERMOSTATIC MIXING VALVE TYPE.
8. THE MIXING VALVE IN A SHOWER (INCLUDING OVER A TUB) SHALL BE PRESSURE BALANCING SET AT A MAXIMUM 120° F. THE WATER-FILLER VALVE IN BATHTUBS/WHIRLPOOLS SHALL HAVE A TEMPERATURE LIMITING DEVICE SET AT A MAXIMUM OF 120° F. THE WATER HEATER THERMOSTAT CANNOT BE USED TO MEET THESE PROVISIONS. (CPC 408.3, 409.4). WHERE THE WATER CLOSET COMES INTO CONTACT WITH THE WALL OR FLOOR, THE JOINT SHALL BE CAULKED AND SEALED TO BE WATERTIGHT. (CPC 402.2).
9. PROVIDE A MECHANICALLY OPERATED EXHAUST SYSTEM IN ALL BATHROOMS, WATER CLOSET, COMPARTMENTS, AND SIMILAR ROOMS PER SECTION R303.3 AND 303.4, 2022 C.R.C.
10. BATHROOM EXHAUST FANS SHALL BE ENERGY STAR DUCTED TO OUTSIDE. UNLESS FUNCTIONING AS A COMPONENT OF A WHOLE HOUSE VENTILATION SYSTEM, BATHROOM EXHAUST FANS MUST BE CONTROLLED BY A HUMIDISTAT BETWEEN A RELATIVE HUMIDITY RANGE OF 50% - 80%.
11. AS PER CPC 418.0 SHOWER AND TUB-SHOWER COMBINATIONS SHALL HAVE INDIVIDUAL CONTROL VALVES OF THE PRESSURE BALANCE OR THE THERMOSTATIC MIXING VALVE TYPE
12. AS PER CALIFORNIA CIVIL CODE ARTICLE 1101.4 AND CALGREEN SECTION 301.1, ALL FIXTURES WILL MEET THE COMPLIANT FLOW RATES
    a.a. WATER CLOSET FLOW RATE SHALL NOT EXCEED 1.28 GPF (CALGREEN 4.303.1)
    a.b. COMBINED FLOW RATE OF ALL SHOWER HEADS AND/OR SHOWER OUTLETS COMBINED BY A SINGLE VALVE SHALL NOT EXCEED 1.8 GPM @ 80 PSI (CALGREEN 4.303.1.5)
    a.c. LAVATORY FAUCET FLOW RATE SHALL NOT EXCEED 1.2 GPM @ 60PSI (CALGREEN 4.303.1.5)
    a.d. KITCHEN FAUCET FLOW RATE SHALL NOT EXCEED 1.8 GPM @60 PSI
13. TEMPERED GLAZING SHALL BE INSTALLED IN ACCORDANCE WITH CBC 2406.4, 2403.1 AND CRC 308.1, R308.4 AT THE LOCATIONS LISTED BELOW. TEMPERED GLAZING SHALL BE PERMANENTLY IDENTIFIED BY A MANUFACTURER MARKING THAT IS PERMANENTLY APPLIED.
    •WITHIN A PORTION OF WALL ENCLOSING A TUB/SHOWER WHERE THE BOTTOM EXPOSED EDGE OF THE GLAZING IS LESS THAN 60 INCHES ABOVE THE STANDING SURFACE AND DRAIN INLET.
    • WITHIN 60 INCHES OF A TUB/SHOWER WHERE THE GLAZING IS LESS THAN 60 INCHES ABOVE THE WALKING SURFACE.
    • GLAZING WITHIN 24 INCHES OF EITHER SIDE OF THE DOOR IN THE PLANE OF THE DOOR IN A CLOSED POSITION.
    • GLAZING ON THE HINGE-SIDE OF AN IN-SWINGING DOOR THAT IS INSTALLED PERPENDICULAR TO A DOOR IN A CLOSED POSITION AND WITHIN 24 INCHES OF THE DOOR.
14. AS PER 2022 CPC 408 ALL SHOWER AND SHOWER-OVER-TUB AREAS TO HAVE:

A. A MINIMUM INTERIOR FLOOR AREA OF 1,024 SQUARE INCHES.
B. CAPABLE OF ENCOMPASSING 30-INCH CIRCLE.
C. THE FINISHED FLOOR OF THE RECEPTOR SHALL SLOPE UNIFORMLY FROM THE SIDES TOWARD THE DRAIN NOT LESS THAN ¼" PER FOOT AND NOT MORE THAN ½" PER FOOT.
D. SHOWER DOORS SHALL BE SIZED AND OPEN TO MAINTAIN NOT LESS THAN 22" UNOBSTRUCTED OPENING. GLASS DOORS SHALL BE TEMPERED.
E. SHOWERS AND TUB/SHOWERS ARE PROVIDED WITH PRESSURE BALANCE OR THERMOSTATIC MIXING VALVE CONTROLS.
F. SHOWER AND TUB/SHOWER WALLS HAVE A SMOOTH, HARD, NONABSORBENT SURFACE (E.G., CERAMIC TILE) OVER AN APPROVED MOISTURE RESISTANT UNDERLAYMENT TO A HEIGHT OF 72 INCHES ABOVE THE DRAIN INLET PER 2022 CRC

AS PER 2022 CPC 408 ALL SHOWER AND SHOWER-OVER-TUB AREAS TO HAVE:
A. A MINIMUM INTERIOR FLOOR AREA OF 1,024 SQUARE INCHES.
B. CAPABLE OF ENCOMPASSING 30-INCH CIRCLE.
C. THE FINISHED FLOOR OF THE RECEPTOR SHALL SLOPE UNIFORMLY FROM THE SIDES TOWARD THE DRAIN NOT LESS THAN ¼" PER FOOT AND NOT MORE THAN ½" PER FOOT.
D. SHOWER DOORS SHALL BE SIZED AND OPEN TO MAINTAIN NOT LESS THAN A 22" UNOBSTRUCTED OPENING. GLASS DOORS SHALL BE TEMPERED.
E. SHOWERS AND TUB/SHOWERS ARE PROVIDED WITH PRESSURE BALANCE OR THERMOSTATIC MIXING VALVE CONTROLS.
F. SHOWER AND TUB/SHOWER WALLS HAVE A SMOOTH, HARD, NONABSORBENT SURFACE (E.G., CERAMIC TILE) OVER AN APPROVED MOISTURE RESISTANT UNDERLAYMENT TO A HEIGHT OF 72 INCHES ABOVE THE DRAIN INLET PER 2022 CRC

N12 E-01

## MECHANICAL NOTES:

1. THE KITCHEN EXHAUST HOOD VENT MUST TERMINATE ON THE BUILDING EXTERIOR AT LEAST 3 FT. FROM OTHER OPENINGS INTO THE BUILDING [CMC502.2.1].
2. DUCTED KITCHEN EXHAUST IS REQUIRED TO HAVE A METAL, SMOOTH INTERIOR SURFACE DUCT FOR VENT HOOD OR DOWN DRAFT EXHAUST VENT. ALUMINUM FLEX DUCT IS NOT APPROVED. PROVIDE BACK DRAFT DAMPER AS PER CMC 504.3
3. MOISTURE EXHAUST DUCTS FOR CLOTHES DRYERS SHALL TERMINATE OUTSIDE OF THE BUILDING AND HAVE A BACK-DRAFT DAMPER. SUCH DUCTS SHALL BE METAL WITH A SMOOTH INTERIOR SURFACE AND SHALL NOT CONTAIN SHEET METAL SCREWS OR OTHER FASTENERS THAT OBSTRUCT THE FLOW.
4. CLOTHES DRYER DUCTS SHALL HAVE A MAXIMUM LENGTH OF 14 FEET INCLUDING TWO 90 DEGREE ELBOWS.

N13 E-01

## PLUMBING NOTES:

1. DISHWASHERS SHALL BE CONNECTED WITH AN APPROVED DRAINAGE AIR GAP DEVICES LOCATED ABOVE THE FLOOD LEVEL RIM OF THE SINK [CPC 807.3].
2. ALL PIPING ¾ INCH OR MORE IN DIAMETER AND ALL HOT WATER PIPES FROM THE HEATING SOURCE TO THE KITCHEN FIXTURES MUST BE INSULATED WITH MIN. 1-INCH THICK INSULATION [CNC 150.0(J)2]. EXISTING INACCESSIBLE PIPING DOES NOT REQUIRE INSULATION.
3. ALL WATER DISTRIBUTION PIPES SHALL BE COPPER (TYPE L OR M)
4. NON-REMOVABLE BACKFLOW PREVENTION DEVICES ARE REQUIRED ON ALL HOSE BIBS. (CPC 603.3)
5. PLUMBING WASTE VENTS SHALL TERMINATE NOT LESS THAN 10 FEET FROM, OR NOT LESS THAN 3 FEET ABOVE, AN OPENABLE WINDOW, DOOR, OPENING, AIR INTAKE, OR VENT SHAFT, OR NOT LESS THAN 3 FEET IN EVERY DIRECTION FROM A LOT LINE, ALLEY AND STREET EXCEPTED. CPC 906.2.
6. THE GRADE OF HORIZONTAL DRAINAGE PIPE SHALL NOT BE LESS THAN 1/4" PER FOOT. CPC 708.1.
7. WATER HEATERS REQUIRE TWO SEISMIC STRAPS; ONE LOCATED WITHIN THE TOP 1/3 OF THE WATER HEATER UNIT AND ONE AT THE BOTTOM 1/3. THE BOTTOM STRAP MUST BE LOCATED AT LEAST 4 INCHES AWAY FROM THE WATER HEATER CONTROLS.

N14 E-01

## FIRE ALARM NOTES:

A. SMOKE ALARMS SHALL BE LISTED AS COMPLYING WITH UL 217 AND BE INSTALLED AND MAINTAINED IN ACCORDANCE WITH NFPA 720 AND THE MANUFACTURER'S INSTRUCTIONS.
B. CARBON MONOXIDE ALARMS SHALL BE LISTED AS COMPLYING WITH UL 2034 AND BE INSTALLED AND MAINTAINED IN ACCORDANCE WITH NFPA 720 AND THE MANUFACTURER'S INSTRUCTIONS.

PROJECT NUMBER:
-

PROJECT ADDRESS:
40 W SUMMIT DR,
EMERALD HILLS, CA 94062

DRAWN FOR:
BOB JOHNSTON
40 W SUMMIT DR, EMERALD HILLS, CA 94062

DRAWN BY:
SARRAH RESHAMWALA
XAR DESIGNS
2110 STANFORD AVE, MOUNTAIN VIEW CA 94040
sarrah.reshamwala@gmail.com

FOR OFFICE USE ONLY:

SCALE AT ARCH D:

| REV | DATE | ISSUE |
|---|---|---|
| | 09/12/2024 | |
| 1 | | |
| 2 | | |

# ELECTRICAL PLAN

**40 W SUMMIT DR.**
INTERIOR REMODEL & ADDITION

# E-01

# 2022 CALIFORNIA GREEN BUILDING STANDARDS CODE
## RESIDENTIAL MANDATORY MEASURES, SHEET 1

Y = YES
N/A = NOT APPLICABLE
RESPON. PARTY = RESPONSIBLE PARTY (ie: ARCHITECT, ENGINEER, OWNER, CONTRACTOR, INSPECTOR ETC.)

## CHAPTER 3
## GREEN BUILDING
### SECTION 301 GENERAL

☑ ☐ **301.1 SCOPE.** Buildings shall be designed to include the green building measures specified as mandatory in the application checklists contained in this code. Voluntary green building measures are also included in the application checklists and may be included in the design and construction of structures covered by this code, but are not required unless adopted by a city, county, or city and county as specified in Section 101.7.

**301.1.1 Additions and alterations. [HCD]** The mandatory provisions of Chapter 4 shall be applied to additions or alterations of existing residential buildings where the addition or alteration increases the building's conditioned area, volume, or size. The requirements shall apply only to and/or within the specific area of the addition or alteration.

**Note:** On and after January 1, 2014, residential buildings undergoing permitted alterations, additions, or improvements shall replace noncompliant plumbing fixtures with water-conserving plumbing fixtures. Plumbing fixture replacement is required prior to issuance of a certificate of final completion, certificate of occupancy or final permit approval by the local building department. See Civil Code Section 1101.1, et seq., for the definition of a noncompliant plumbing fixture, types of residential buildings affected and other important enactment dates.

☑ ☐ **301.2 LOW-RISE AND HIGH-RISE RESIDENTIAL BUILDINGS. [HCD]** The provisions of individual sections of CALGreen may apply to either low-rise residential buildings high-rise residential buildings, or both. Individual sections will be designated by banners to indicate where the section applies specifically to low-rise only (LR) or high-rise only (HR). When the section applies to both low-rise and high-rise buildings, no banner will be used.

**ABBREVIATION DEFINITIONS:**

| | |
|---|---|
| HCD | Department of Housing and Community Development |
| BSC | California Building Standards Commission |
| DSA-SS | Division of the State Architect, Structural Safety |
| OSHPD | Office of Statewide Health Planning and Development |
| LR | Low Rise |
| HR | High Rise |
| AA | Additions and Alterations |
| N | New |

☑ ☐

## CHAPTER 4
## RESIDENTIAL MANDATORY MEASURES

### DIVISION 4.1 PLANNING AND DESIGN

### SECTION 4.102 DEFINITIONS
**4.102.1 DEFINITIONS**
The following terms are defined in Chapter 2 *(and are included here for reference)*

☐ ☐ **FRENCH DRAIN.** A trench, hole or other depressed area loosely filled with rock, gravel, fragments of brick or similar pervious material used to collect or channel drainage or runoff water.

**WATTLES.** Wattles are used to reduce sediment in runoff. Wattles are often constructed of natural plant materials such as hay, straw or similar material shaped in the form of tubes and placed on a downflow slope. Wattles are also used for perimeter and inlet controls.

### 4.106 SITE DEVELOPMENT
**4.106.1 GENERAL.** Preservation and use of available natural resources shall be accomplished through evaluation and careful planning to minimize negative effects on the site and adjacent areas. Preservation of slopes, management of storm water drainage and erosion controls shall comply with this section.

☑ ☐ **4.106.2 STORM WATER DRAINAGE AND RETENTION DURING CONSTRUCTION.** Projects which disturb less than one acre of soil and are not part of a larger common plan of development which in total disturbs one acre or more, shall manage storm water drainage during construction. In order to manage storm water drainage during construction, one or more of the following measures shall be implemented to prevent flooding of adjacent property, prevent erosion and retain soil runoff on the site.

1. Retention basins of sufficient size shall be utilized to retain storm water on the site.
2. Where storm water is conveyed to a public drainage system, collection point, gutter or similar disposal method, water shall be filtered by use of a barrier system, wattle or other method approved by the enforcing agency.
3. Compliance with a lawfully enacted storm water management ordinance.

**Note:** Refer to the State Water Resources Control Board for projects which disturb one acre or more of soil, or are part of a larger common plan of development which in total disturbs one acre or more of soil.

(Website: https://www.waterboards.ca.gov/water_issues/programs/stormwater/construction.html)

☑ ☐ **4.106.3 GRADING AND PAVING.** Construction plans shall indicate how the site grading or drainage system will manage all surface water flows to keep water from entering buildings. Examples of methods to manage surface water include, but are not limited to, the following:

1. Swales
2. Water collection and disposal systems
3. French drains
4. Water retention gardens
5. Other water measures which keep surface water away from buildings and aid in groundwater recharge.

**Exception**: Additions and alterations not altering the drainage path.

☑ ☐ **A4.106.8.2 a)** The property owner shall provide Conduit Only, EVSE-Ready Outlet, or EVSE Installed for each residence. (b) Location. The proposed location of a charging station may be internal or external to the dwelling, and shall be in close proximity to an on-site parking space consistent with City guidelines, rules, and regulations.

☑ ☐ **A4.108.8.3** Provide at least one EVSE-ready outlet or charger for each residential unit in the structure. For guest parking provide conduit only, EVSE-ready outlet, or EVSE installed for at least 25% of guest parking spaces, of which at least 5% (no less than one) shall be EVSE installed. If multi-family residential structures have individual attached parking then property owner shall provide conduit only, EVSE-ready outlet, or EVSE installed in a parking space attached to the residence or a shared electrical panel between the residence and parking space.

☑ ☐ **A4.106.9** Projects must comply with the bicycle parking requirements in the Palo Alto Municipal Code.

PAMC 16.17.050/ 2016 Title 24, Part 6 Option 1: The performance approach specified within the 2016 CEC shall be used to demonstrate the TDV Energy of proposed new single-family residential construction is at least: 10 percent less than the TDV Energy of the Standard Design if the proposed building does not include a photovoltaic system.

PAMC 16.17.050/ 2016 Title 24, Part 6 Option 2: The performance approach specified within the 2016 CEC shall be used to demonstrate the TDV Energy of proposed new single-family residential construction is at least: 20 percent less than the TDV Energy of the Standard Design if proposed building includes a photovoltaic system.

PAMC 16.17.050/ 2016 Title 24, Part 6 Option 1: The performance approach specified within the 2016 CEC shall be used to demonstrate the TDV Energy of proposed new multi-family residential construction is at least: 10 percent less than the TDV Energy of the Standard Design if the proposed building does not include a photovoltaic system.

PAMC 16.17.050/ 2016 Title 24, Part 6 Option 2: The performance approach specified within the 2016 CEC shall be used to demonstrate the TDV Energy of proposed new multi-family residential construction is at least: 12 percent less than the TDV Energy of the Standard Design if proposed building includes a photovoltaic system.

☑ ☐ PAMC 16.17.060 A dedicated solar zone shall be located on the roof or overhang of the building and have a total area no less than 500 square feet. Install rigid conduit extending through the roofline and terminating within 10 feet of the electrical panel. Conduit shall penetrate the roof and electrical panal shall be solar ready. Conduit shall be labeled. Labels must be reflective and placed 1) on either side of plates, at major bends, and every 10 feet.

PAMC 16.17.060 Section 100.4/ Title 24, Part 6 All Electric Exemption: New single family and multi-family residential construction designed to be all-electric shall be exempt from the Local Energy Efficiency Reach Code. Electricity shall be the only permanent source of energy for water-heating, space-heating, cooking and clothes drying. Compliance to all other requirements of the 2016 California Energy Code shall not be relieved.

☑ ☐ **4.106.4.2.3 Single EV space required.** Install a listed raceway capable of accommodating a 208/240- volt dedicated branch circuit. The raceway shall not be less than trade size 1 (nominal 1-inch inside diameter). The raceway shall originate at the main service or subpanel and shall terminate into a listed cabinet, box or enclosure in close proximity to the proposed location of the EV space. Construction documents shall identify the raceway termination point. The service panel and/or subpanel shall provide capacity to install a 40-ampere minimum dedicated branch circuit and space(s) reserved to permit installation of a branch circuit overcurrent protective device.

**4.106.4.2.4 Multiple EV spaces required.** Construction documents shall indicate the raceway termination point and proposed location of future EV spaces and EV chargers. Construction documents shall also provide information on amperage of future EVSE, raceway method(s), wiring schematics and electrical load calculations to verify that the electrical panel service capacity and electrical system, including any on-site distribution transformer(s), have sufficient capacity to simultaneously charge all EVs at all required EV spaces at the full rated amperage of the EVSE. Plan design shall be based upon a 40-ampere minimum branch circuit. Required raceways and related components that are planned to be installed underground, enclosed, inaccessible or in concealed areas and spaces shall be installed at the time of original construction.

**4.106.4.2.5 Identification.** The service panel or subpanel circuit directory shall identify the overcurrent protective device space(s) reserved for future EV charging purposes as "EV CAPABLE" in accordance with the *California Electrical Code*.

### DIVISION 4.2 ENERGY EFFICIENCY

### 4.201 GENERAL
**4.201.1 SCOPE.** For the purposes of mandatory energy efficiency standards in this code, the California Energy Commission will continue to adopt mandatory standards.

### DIVISION 4.3 WATER EFFICIENCY AND CONSERVATION
### 4.303 INDOOR WATER USE

☑ ☐ **4.303.1.1** All toilets are 1.28 gpf or dual-flush.

☑ ☐ **4.303.1.2** Urinal flush rate no more than 0.9 gpf.

☑ ☐ **4.303.1.3.1** Showerheads have max flow rate of 1.8 gpm at 80 psi. Showerheads shall be certified to the performance criteria of the U.S.EPA WaterSense specs.

☑ ☐ **4.303.1.3.2** When a shower is served by more than one showerhead, the combined flow rate of all showerheads and/or other shower outlets controlled by a single valve shall not exceed 2.0 gpm at 80 psi, or the shower shall be designed to allow only one shower outlet to be in operation at a time.

☑ ☐ **4.303.1.4.1** Max flow rate for all lavy faucets is 1.2 gpm at 60 psi.

**4.303.1.4.2** Lavy faucets in common/public areas shall not exceed 0.5 gpm at 60 psi.

**4.303.1.4.3** Metering faucets when installed in residential buildings shall not deliver more than 0.25 gallons per cycle.

☑ ☐ **4.303.1.4.4** Kitchen faucets shall not exceed 1.8 gpm. Kitchen faucets may temporarily increase the flow above the maximum rate, but not to exceed 2.2 gpm at 60 psi, and must default to a maximim flow rate of 1.8 gpm at 60 psi.

☑ ☐ **4.303.2** Plumbing fixtures shall comply with CA Plumbing Code.

☑ ☐ **4.304.1** Outdoor potable water use in landscape areas. After December 1, 2015, new residential developments with an aggregate landscape area equal to or greater than 500 square feet shall comply with one of The following options:
1. A local water efficient landscape ordinance or the current California Department of Water Resources' Model Water Efficient Landscape Ordinance (MWELO), whichever is more stringent; or
2. Projects with aggregate landscape areas less than 2,500 square feet may comply with the MWELO's Appendix D Prescriptive Compliance Option."

**A4.303.5** One- and two-family dwellings shall be equipped with a demand hot water recirculation system with these features: The recirculation system is comprised of hot water supply and return piping with shutoff valves, balancing valves, circulating pumps, and a method of controlling the circulation system. The demand hot water recirculation shalled be installed in accordance with the California Plumbing Code, California Energy Code, and the manufacturer's installation instructions.

**A4.304.1** Rainwater catchment system is designed and installed to use rain water generated by at least 65% of the available roof area. Systems shall be designed and installed accordanging to CA Plumbing Code.

**A4.304.2** Irrigation Metering Device. Dedicated irrigation meters are to be installed in all new construction and rehabilitated landscapes when the landscape is greater than 1,000 square feet. [PAMC 16.14.220]

**A4.305.1** Alternative plumbing piping is installed to permit the discharge from the clothes washer or other fixtures to be used for an irrigation system in compliance with the CA Plumbing Code.

**A4.305.2** Based on projected availability, dual water piping is installed for future use of recycled water at the following locations: 1) Interior piping for the use of recycled water is installed to serve all toilets, urinals, and floor drains. 2) Exterior piping is installed to transport recycled water from the point of connection to the structure. Recycled water systems shall be designed and installed in accordance with the CA Plumbing Code.

**A4.305.3** Recycled water is used for landscape irrigation.

NOTE:THIS TABLE COMPILES THE DATA IN SECTION 4.303.1, AND IS INCLUDED AS A CONVENIENCE FOR THE USER.

TABLE - MAXIMUM FIXTURE WATER USE

| FIXTURE TYPE | FLOW RATE |
|---|---|
| SHOWER HEADS (RESIDENTIAL) | 1.8 GMP @ 80 PSI |
| LAVATORY FAUCETS (RESIDENTIAL) | MAX. 1.2 GPM @ 60 PSI<br>MIN. 0.8 GPM @ 20 PSI |
| LAVATORY FAUCETS IN COMMON & PUBLIC USE AREAS | 0.5 GPM @ 60 PSI |
| KITCHEN FAUCETS | 1.8 GPM @ 60 PSI |
| METERING FAUCETS | 0.2 GAL/CYCLE |
| WATER CLOSET | 1.28 GAL/FLUSH |
| URINALS | 0.125 GAL/FLUSH |

### 4.304 OUTDOOR WATER USE
☐ ☐ **4.304.1 OUTDOOR POTABLE WATER USE IN LANDSCAPE AREAS.** Residential developments shall comply with a local water efficient landscape ordinance or the current California Department of Water Resources' Model Water Efficient Landscape Ordinance (MWELO), whichever is more stringent.

**NOTES:**

1. The Model Water Efficient Landscape Ordinance (MWELO) is located in the *California Code Regulations,* Title 23, Chapter 2.7, Division 2. MWELO and supporting documents, including water budget calculator, are available at: https://www.water.ca.gov/

### DIVISION 4.4 MATERIAL CONSERVATION AND RESOURCE EFFICIENCY

### 4.406 ENHANCED DURABILITY AND REDUCED MAINTENANCE
☑ ☐ **4.406.1 RODENT PROOFING.** Annular spaces around pipes, electric cables, conduits or other openings in sole/bottom plates at exterior walls shall be protected against the passage of rodents by closing such openings wth cement mortar, concrete masonry or a similar method acceptable to the enforcing agency.

### 4.408 CONSTRUCTION WASTE REDUCTION, DISPOSAL AND RECYCLING
☑ ☐ **4.408.1 CONSTRUCTION WASTE MANAGEMENT.** Recycle and/or salvage for reuse a minimum of 65 percent of the non-hazardous construction and demolition waste in accordance with either Section 4.408.2, 4.408.3 or 4.408.4, or meet a more stringent local construction and demolition waste management ordinance.

**Exceptions:**

1. Excavated soil and land-clearing debris.
2. Alternate waste reduction methods developed by working with local agencies if diversion of recycle facilities capable of compliance with this item do not exist or are not located reasonably close to the jobsite.
3. The enforcing agency may make exceptions to the requirements of this section when isolated jobsites are located in areas beyond the haul boundaries of the diversion facility.

**4.408.2 CONSTRUCTION WASTE MANAGEMENT PLAN**. Submit a construction waste management plan in conformance with Items 1 through 5. The construction waste management plan shall be updated as necessary and shall be available during construction for examination by the enforcing agency.

1. Identify the construction and demolition waste materials to be diverted from disposal by recycling, reuse on the project or salvage for future use or sa
2. Specify if construction and demolition waste materials will be sorted on-site (source separated) or bulk mixed (single stream).
3. Identify diversion facilities where the construction and demolition waste material collected will betaken.
4. Identify construction methods employed to reduce the amount of construction and demolition waste generated.
5. Specify that the amount of construction and demolition waste materials diverted shall be calculated by weight or volume, but not by both.

☑ ☐ **4.408.2** All demolition and construction debris is tracked through a Green Halo account.

**4.408.3 WASTE MANAGEMENT COMPANY.** Utilize a waste management company, approved by the enforcing agency, which can provide verifiable documentation that the percentage of construction and demolition waste material diverted from the landfill complies with Section 4.408.1.

**Note:** The owner or contractor may make the determination if the construction and demolition waste materials will be diverted by a waste management company.

**4.408.4 WASTE STREAM REDUCTION ALTERNATIVE [LR].** Projects that generate a total combined weight of construction and demolition waste disposed of in landfills, which do not exceed 3.4 lbs./sq.ft. of the building area shall meet the minimum 65% construction waste reduction requirement in Section 4.408.1

**4.408.4.1 WASTE STREAM REDUCTION ALTERNATIVE.** Projets that generate a total combined weight of construction and demolition waste disposed of in landfills, which do not exceed 2 pounds per square foot of the building area, shall meet the minimum 65% construction waste reduction requirement in Section 4.408.1

☑ ☐ **4.408.5 DOCUMENTATION**. Documentation shall be provided to the enforcing agency which demonstrates compliance with Section 4.408.2, items 1 through 5, Section 4.408.3 or Section 4.408.4..

**Notes**:

1. Sample forms found in "A Guide to the California Green Building Standards Code (Residential)" located at www.hcd.ca.gov/CALGreen.html may be used to assist ing documenting compliance with this section.
2. Mixed construction and demolition debris (C & D) processors can be located at the California Department of Resources Recycling and Recovery (CalRecycle).

☑ ☐ ### 4.410 BUILDING MAINTENANCE AND OPERATION
**4.410.1 OPERATION AND MAINTENANCE MANUAL.** At the time of final inspection, a manual, compact disc, web-based reference or other media acceptable to the enforcing agency which includes all of the following shall be placed in the building:

1. Directions to the owner or occupant that the manual shall remain with the building throughout the life cycle of the structure.
2. Operation and maintenance instructions for the following:
   a. Equipment and appliances, including water-saving devices and systems, HVAC systems, photovoltaic systems, electric vehicle chargers, water-heating systems and other major appliances and equipment.
   b. Roof and yard drainage, including gutters and downspouts.
   c. Space conditioning systems, including condensers and air filters.
   d. Landscape irrigation systems.
   e. Water reuse systems.
3. Information from local utility, water and waste recovery providers on methods to further reduce resource consumption, including recycle programs and locations.
4. Public transportation and/or carpool options available in the area.
5. Educational material on the positive impacts of an interior relative humidity between 30-60 percent and what methods an occupant may use to maintain the relative humidity level in that range.
6. Information about water-conserving landscape and irrigation design and controllers which conserve water.
7. Instructions for maintaining gutters and downspouts and the importance of diverting water at least 5 feet away from the foundation.
8. Information on required routine maintenance measures, including, but not limited to, caulking, painting, grading around the building, etc.
9. Information about state solar energy and incentive programs available.
10. A copy of all special inspections verifications required by the enforcing agency or this code.

☐ N/A **4.410.2 RECYCLING BY OCCUPANTS.** Where 5 or more multifamily dwelling units are constructed on a building site, provide readily accessible area(s) that serves all buildings on the site and are identified for the depositing, storage and collection of non-hazardous materials for recycling, including (at a minimum) paper, corrugated cardboard, glass, plastics, organic waster, and metals, or meet a lawfully enacted local recycling ordinance, if more restrictive.

**Exception:** Rural jurisdictions that meet and apply for the exemption in Public Resources Code Section 42649.82 (a)(2)(A) et seq. are note required to comply with the organic waste portion of this section.

### DIVISION 4.5 ENVIRONMENTAL QUALITY

### SECTION 4.501 GENERAL
**4.501.1 Scope**
The provisions of this chapter shall outline means of reducing the quality of air contaminants that are odorous, irritating and/or harmful to the comfort and well being of a building's installers, occupants and neighbors.

### SECTION 4.502 DEFINITIONS
**5.102.1 DEFINITIONS**
The following terms are defined in Chapter 2 *(and are included here for reference)*

**AGRIFIBER PRODUCTS.** Agrifiber products include wheatboard, strawboard, panel substrates and door cores, not including furniture, fixtures and equipment (FF&E) not considered base building elements.

**COMPOSITE WOOD PRODUCTS.** Composite wood products include hardwood plywood, particleboard and medium density fiberboard. "Composite wood products" does not include hardboard, structural plywood, structural panels, structural composite lumber, oriented strand board, glued laminated timber, prefabricated wood I-joists or finger-jointed lumber, all as specified in California Code of regulations (CCR), title 17, Section 93120.1.

**DIRECT-VENT APPLIANCE.** A fuel-burning appliance with a sealed combustion system that draws all air for combustion from the outside atmosphere and discharges all flue gases to the outside atmosphere.

### SECTION 4.501 GENERAL
**4.501.1 Scope**
The provisions of this chapter shall outline means of reducing the quality of air contaminants that are odorous, irritating and/or harmful to the comfort and well being of a building's installers, occupants and neighbors.

### SECTION 4.502 DEFINITIONS
**5.102.1 DEFINITIONS**
The following terms are defined in Chapter 2 *(and are included here for reference)*

**AGRIFIBER PRODUCTS.** Agrifiber products include wheatboard, strawboard, panel substrates and door cores, not including furniture, fixtures and equipment (FF&E) not considered base building elements.

**COMPOSITE WOOD PRODUCTS.** Composite wood products include hardwood plywood, particleboard and medium density fiberboard. "Composite wood products" does not include hardboard, structural plywood, structural panels, structural composite lumber, oriented strand board, glued laminated timber, prefabricated wood I-joists or finger-jointed lumber, all as specified in California Code of regulations (CCR), title 17, Section 93120.1.

**DIRECT-VENT APPLIANCE.** A fuel-burning appliance with a sealed combustion system that draws all air for combustion from the outside atmosphere and discharges all flue gases to the outside atmosphere.

☐ N/A **A4.403.2** Tier 2 = 25%. Materials used to reduce cement are: fly ash, slag, silica fume, rice hull ash.

☐ N/A **A4.404.**1 Beams, headers, and trimmers are sized and installed as specified in CRC Tables R502.5(1) and R502.5(2).

☐ N/A **A4.404.2** Building are designed to minimize waste by one or more of the following: 1) Building design dimensions in 2 ft increments are used (stud 24" OC?). 2) Windows and doors are located at regular 16" or 24" stud positions.

☐ N/A **A4.404.3** Use premanufactured building systems whenever possible. One or more of the following: 1) Composite floor joist or premanufactured floor framing system. 2) Composite roof rafters or premanufactured roof framing system. 3) Panelized framing - SIPs, ICF, etc.

☐ N/A **A4.404.4** Materials lists are included in the plans that specify the material quantity and provide direction for on-site cuts to be made from the material provided. Material lists and direction shall be provided for the following systems: 1) Floor framing. 2) Wall framing. 3) Ceiling and roof framing. 4) Structural panels and roof sheathing.

☐ N/A **A4.405.1** Use prefinished building materials that do not require additional painting or staining when possible. Use one or more of the following: 1) Exterior trim not requiring paint or stain. 2) Windows not requiring paint or stain. 3) Siding or exterior wall coverings that do not require paint or stain.

☐ N/A **A4.405.2** Concrete floors that do not require additional coverings are used including but not limited to stained, natural, or stamped concrete floors.

☐ N/A **A4.405.4** Use one or more of the following materials manufactured from rapidly renewable sources: 1) Insulation. 2) Bamboo or cork. 3) Engineererd products. 4) Agricultural based products.

☐ N/A **A4.407.1** Install foundation and landscape drains that discharge to a dry well, sump, bioswale, etc.

☐ N/A **A4.407.2** Install gutter and downspout systems to route water at least 5' away from the foundation or connect to landscape drains that discharge to a dry well, sump, bioswale, rainwater capture system, etc.

☐ N/A **A4.407.3** Provide flashing details on the building plans that comply with accepted industry standards. Location to be shown on plans are: 1) Around windows and doors. 2) Roof valleys. 3) Deck connections to the structure. 4) Roof-to-wall intersections. 5) Chimney to roof intersection. 6) Drip caps above windows and doors with architectural projections.

☐ N/A **A4.407.4** Protect building materials delivered to the construction site from rain and other sources of moisture.

☐ N/A **A4.407.6** Exterior doors are covered to prevent water intrusion by one or more of the following: 1) An awning at leat 4' in depth. 2) The door is protected by a roof overhang at least 4' in depth. 3) The door is recessed at least 4'.

☐ N/A **A4.407.7** A permanent awning or overhang at least 2' in depth at all exterior walls.

***DISCLAIMER:*** *THIS DOCUMENT IS PROVIDED AND INTENDED TO BE USED AS A MEANS TO INDICATE AREAS OF COMPLIANCE WITH THE 2016 CALIFORNIA GREEN BUILDING STANDARDS (CALGREEN) CODE. DUE TO THE VARIABLES BETWEEN BUILDING DEPARTMENT JURISDICTIONS, THIS CHECKLIST IS TO BE USED ON AN INDIVIDUAL PROJECT BASIS AND MAY BE MODIFIED BY THE END USER TO MEET THOSE INDIVIDUAL NEEDS. THE END USER ASSUMES ALL RESPONSIBILITY ASSOCIATED WITH THE USE OF THIS DOCUMENT, INCLUDING VERIFICATION WITH THE FULL CODE.*

PROJECT NUMBER:
-

PROJECT ADDRESS:
40 W SUMMIT DR,
EMERALD HILLS, CA 94062

DRAWN FOR:
BOB JOHNSTON
40 W SUMMIT DR, EMERALD HILLS, CA 94062

DRAWN BY:
SARRAH RESHAMWALA
XAR DESIGNS
2110 STANFORD AVE, MOUNTAIN VIEW CA 94040
sarrah.reshamwala@gmail.com

FOR OFFICE USE ONLY:

SCALE AT ARCH D:

| REV | DATE | ISSUE |
|---|---|---|
| | 09/12/2024 | |
| 1 | | |
| 2 | | |

CALGREEN CHECKLIST

**40 W SUMMIT DR.**
INTERIOR REMODEL & ADDITION

**B-01**

# 2022 CALIFORNIA GREEN BUILDING STANDARDS CODE
## RESIDENTIAL MANDATORY MEASURES, SHEET 2

Y = YES
N/A = NOT APPLICABLE
RESPON. PARTY = RESPONSIBLE PARTY (ie: ARCHITECT, ENGINEER, OWNER, CONTRACTOR, INSPECTOR ETC.)

**MAXIMUM INCREMENTAL REACTIVITY (MIR).** The maximum change in weight of ozone formed by adding a compound to the "Base Reactive Organic Gas (ROG) Mixture" per weight of compound added, expressed to hundredths of a gram (g $O^3$/g ROC).
Note: MIR values for individual compounds and hydrocarbon solvents are specified in CCR, Title 17, Sections 94700 and 94701.

**MOISTURE CONTENT.** The weight of the water in wood expressed in percentage of the weight of the oven-dry wood.

**PRODUCT-WEIGHTED MIR (PWMIR).** The sum of all weighted-MIR for all ingredients in a product subject to this article. The PWMIR is the total product reactivity expressed to hundredths of a gram of ozone formed per gram of product (excluding container and packaging).
Note: PWMIR is calculated according to equations found in CCR, Title 17, Section 94521 (a).

**REACTIVE ORGANIC COMPOUND (ROC).** Any compound that has the potential, once emitted, to contribute to ozone formation in the troposphere.

**VOC.** A volatile organic compound (VOC) broadly defined as a chemical compound based on carbon chains or rings with vapor pressures greater than 0.1 millimeters of mercury at room temperature. These compounds typically contain hydrogen and may contain oxygen, nitrogen and other elements. See CCR Title 17, Section 94508(a).

### 4.503 FIREPLACES
**4.503.1 GENERAL.** Any installed gas fireplace shall be a direct-vent sealed-combustion type. Any installed woodstove or pellet stove shall comply with U.S. EPA New Source Performance Standards (NSPS) emission limits as applicable, and shall have a permanent label indicating they are certified to meet the emission limits. Woodstoves, pellet stoves and fireplaces shall also comply with applicable local ordinances.

### 4.504 POLLUTANT CONTROL
**4.504.1 COVERING OF DUCT OPENINGS & PROTECTION OF MECHANICAL EQUIPMENT DURING CONSTRUCTION.** At the time of rough installation, during storage on the construction site and until final startup of the heating, cooling and ventilating equipment, all duct and other related air distribution component openings shall be covered with tape, plastic, sheet metal or other methods acceptable to the enforcing agency to reduce the amount of water, dust or debris which may enter the system.

**4.504.2 FINISH MATERIAL POLLUTANT CONTROL.** Finish materials shall comply with this section.

**4.504.2.1 Adhesives, Sealants and Caulks.** Adhesives, sealant and caulks used on the project shall meet the requirements of the following standards unless more stringent local or regional air pollution or air quality management district rules apply:

1. Adhesives, adhesive bonding primers, adhesive primers, sealants, sealant primers and caulks shall comply with local or regional air pollution control or air quality management district rules where applicable or SCAQMD Rule 1168 VOC limits, as shown in Table 4.504.1 or 4.504.2, as applicable. Such products also shall comply with the Rule 1168 prohibition on the use of certain toxic compounds (chloroform, ethylene dichloride, methylene chloride, perchloroethylene and tricloroethylene), except for aerosol products, as specified in Subsection 2 below.

2. Aerosol adhesives, and smaller unit sizes of adhesives, and sealant or caulking compounds (in units of product, less packaging, which do not weigh more than 1 pound and do not consist of more than 16 fluid ounces) shall comply with statewide VOC standards and other requirements, including prohibitions on use of certain toxic compounds, of *California Code of Regulations*, Title 17, commencing with section 94507.

**4.504.2.2 Paints and Coatings.** Architectural paints and coatings shall comply with VOC limits in Table 1 of the ARB Architectural Suggested Control Measure, as shown in Table 4.504.3, unless more stringent local limits apply. The VOC content limit for coatings that do not meet the definitions for the specialty coatings categories listed in Table 4.504.3 shall be determined by classifying the coating as a Flat, Nonflat or Nonflat-High Gloss coating, based on its gloss, as defined in subsections 4.21, 4.36, and 4.37 of the 2007 California Air Resources Board, Suggested Control Measure, and the corresponding Flat, Nonflat or Nonflat-High Gloss VOC limit in Table 4.504.3 shall apply.

**4.504.2.3 Aerosol Paints and Coatings.** Aerosol paints and coatings shall meet the Product-weighted MIR Limits for ROC in Section 94522(a)(2) and other requirements, including prohibitions on use of certain toxic compounds and ozone depleting substances, in Sections 94522(e)(1) and (f)(1) of *California Code of Regulations*, Title 17, commencing with Section 94520; and in areas under the jurisdiction of the Bay Area Air Quality Management District additionally comply with the percent VOC by weight of product limits of Regulation 8, Rule 49.

**4.504.2.4 Verification.** Verification of compliance with this section shall be provided at the request of the enforcing agency. Documentation shall include at least one of the following:

1. Manufacturer's product specification.
2. Field verification of on-site product containers.

TABLE 4.504.1 - ADHESIVE VOC LIMIT
(Less Water and Less Exempt Compounds in Grams per Liter)

| ARCHITECTURAL APPLICATIONS | VOC LIMIT |
|---|---|
| INDOOR CARPET ADHESIVES | 50 |
| CARPET PAD ADHESIVES | 50 |
| OUTDOOR CARPET ADHESIVES | 150 |
| WOOD FLOORING ADHESIVES | 100 |
| RUBBER FLOOR ADHESIVES | 60 |
| SUBFLOOR ADHESIVES | 50 |
| CERAMIC TILE ADHESIVES | 65 |
| VCT & ASPHALT TILE ADHESIVES | 50 |
| DRYWALL & PANEL ADHESIVES | 50 |
| COVE BASE ADHESIVES | 50 |
| MULTIPURPOSE CONSTRUCTION ADHESIVE | 70 |
| STRUCTURAL GLAZING ADHESIVES | 100 |
| SINGLE-PLY ROOF MEMBRANE ADHESIVES | 250 |
| OTHER ADHESIVES NOT LISTED | 50 |
| **SPECIALTY APPLICATIONS** | |
| PVC WELDING | 510 |
| CPVC WELDING | 490 |
| ABS WELDING | 325 |
| PLASTIC CEMENT WELDING | 250 |
| ADHESIVE PRIMER FOR PLASTIC | 550 |
| CONTACT ADHESIVE | 80 |
| SPECIAL PURPOSE CONTACT ADHESIVE | 250 |
| STRUCTURAL WOOD MEMBER ADHESIVE | 140 |
| TOP & TRIM ADHESIVE | 250 |
| **SUBSTRATE SPECIFIC APPLICATIONS** | |
| METAL TO METAL | 30 |
| PLASTIC FOAMS | 50 |
| POROUS MATERIAL (EXCEPT WOOD) | 50 |
| WOOD | 30 |
| FIBERGLASS | 80 |

1. IF AN ADHESIVE IS USED TO BOND DISSIMILAR SUBSTRATES TOGETHER, THE ADHESIVE WITH THE HIGHEST VOC CONTENT SHALL BE ALLOWED.

2. FOR ADDITIONAL INFORMATION REGARDING METHODS TO MEASURE THE VOC CONTENT SPECIFIED IN THIS TABLE, SEE SOUTH COAST AIR QUALITY MANAGEMENT DISTRICT RULE 1168.

TABLE 4.504.2 - SEALANT VOC LIMIT
(Less Water and Less Exempt Compounds in Grams per Liter)

| SEALANTS | VOC LIMIT |
|---|---|
| ARCHITECTURAL | 250 |
| MARINE DECK | 760 |
| NONMEMBRANE ROOF | 300 |
| ROADWAY | 250 |
| SINGLE-PLY ROOF MEMBRANE | 450 |
| OTHER | 420 |
| **SEALANT PRIMERS** | |
| ARCHITECTURAL | |
| NON-POROUS | 250 |
| POROUS | 775 |
| MODIFIED BITUMINOUS | 500 |
| MARINE DECK | 760 |
| OTHER | 750 |

TABLE 4.504.3 - VOC CONTENT LIMITS FOR ARCHITECTURAL COATINGS[2,3]
GRAMS OF VOC PER LITER OF COATING, LESS WATER & LESS EXEMPT COMPOUNDS

| COATING CATEGORY | VOC LIMIT |
|---|---|
| FLAT COATINGS | 50 |
| NON-FLAT COATINGS | 100 |
| NONFLAT-HIGH GLOSS COATINGS | 150 |
| **SPECIALTY COATINGS** | |
| ALUMINUM ROOF COATINGS | 400 |
| BASEMENT SPECIALTY COATINGS | 400 |
| BITUMINOUS ROOF COATINGS | 50 |
| BITUMINOUS ROOF PRIMERS | 350 |
| BOND BREAKERS | 350 |
| CONCRETE CURING COMPOUNDS | 350 |
| CONCRETE/MASONRY SEALERS | 100 |
| DRIVEWAY SEALERS | 50 |
| DRY FOG COATINGS | 150 |
| FAUX FINISHING COATINGS | 350 |
| FIRE RESISTIVE COATINGS | 350 |
| FLOOR COATINGS | 100 |
| FORM-RELEASE COMPOUNDS | 250 |
| GRAPHIC ARTS COATINGS (SIGN PAINTS) | 500 |
| HIGH TEMPERATURE COATINGS | 420 |
| INDUSTRIAL MAINTENANCE COATINGS | 250 |
| LOW SOLIDS COATINGS[1] | 120 |
| MAGNESITE CEMENT COATINGS | 450 |
| MASTIC TEXTURE COATINGS | 100 |
| METALLIC PIGMENTED COATINGS | 500 |
| MULTICOLOR COATINGS | 250 |
| PRETREATMENT WASH PRIMERS | 420 |
| PRIMERS, SEALERS, & UNDERCOATERS | 100 |
| REACTIVE PENETRATING SEALERS | 350 |
| RECYCLED COATINGS | 250 |
| ROOF COATINGS | 50 |
| RUST PREVENTATIVE COATINGS | 250 |
| SHELLACS | |
| CLEAR | 730 |
| OPAQUE | 550 |
| SPECIALTY PRIMERS, SEALERS & UNDERCOATERS | 100 |
| STAINS | 250 |
| STONE CONSOLIDANTS | 450 |
| SWIMMING POOL COATINGS | 340 |
| TRAFFIC MARKING COATINGS | 100 |
| TUB & TILE REFINISH COATINGS | 420 |
| WATERPROOFING MEMBRANES | 250 |
| WOOD COATINGS | 275 |
| WOOD PRESERVATIVES | 350 |
| ZINC-RICH PRIMERS | 340 |

1. GRAMS OF VOC PER LITER OF COATING, INCLUDING WATER & EXEMPT COMPOUNDS

2. THE SPECIFIED LIMITS REMAIN IN EFFECT UNLESS REVISED LIMITS ARE LISTED IN SUBSEQUENT COLUMNS IN THE TABLE.

3. VALUES IN THIS TABLE ARE DERIVED FROM THOSE SPECIFIED BY THE CALIFORNIA AIR RESOURCES BOARD, ARCHITECTURAL COATINGS SUGGESTED CONTROL MEASURE, FEB. 1, 2008. MORE INFORMATION IS AVAILABLE FROM THE AIR RESOURCES BOARD.

TABLE 4.504.5 - FORMALDEHYDE LIMITS[1]
MAXIMUM FORMALDEHYDE EMISSIONS IN PARTS PER MILLION

| PRODUCT | CURRENT LIMIT |
|---|---|
| HARDWOOD PLYWOOD VENEER CORE | 0.05 |
| HARDWOOD PLYWOOD COMPOSITE CORE | 0.05 |
| PARTICLE BOARD | 0.09 |
| MEDIUM DENSITY FIBERBOARD | 0.11 |
| THIN MEDIUM DENSITY FIBERBOARD[2] | 0.13 |

1. VALUES IN THIS TABLE ARE DERIVED FROM THOSE SPECIFIED BY THE CALIF. AIR RESOURCES BOARD, AIR TOXICS CONTROL MEASURE FOR COMPOSITE WOOD AS TESTED IN ACCORDANCE WITH ASTM E 1333. FOR ADDITIONAL INFORMATION, SEE CALIF. CODE OF REGULATIONS, TITLE 17, SECTIONS 93120 THROUGH 93120.12.

2. THIN MEDIUM DENSITY FIBERBOARD HAS A MAXIMUM THICKNESS OF 5/16" (8 MM).

## DIVISION 4.5 ENVIRONMENTAL QUALITY (continued)
**4.504.3 CARPET SYSTEMS.** All carpet installed in the building interior shall meet the testing and product requirements of at least one of the following:

1. Carpet and Rug Institute's Green Label Plus Program.
2. California Department of Public Health, "Standard Method for the Testing and Evaluation of Volatile Organic Chemical Emissions from Indoor Sources Using Environmental Chambers" Version 1.1, February 2010 (also known as Specification 01350).
3. NSF/ANSI 140 at the Gold level.
4. Scientific Certifications Systems Indoor Advantage™ Gold.

**4.504.3.1 Carpet cushion.** All carpet cushion installed in the building interior shall meet the requirements of the Carpet and Rug Institute's Green Label program.

**4.504.3.2 Carpet adhesive.** All carpet adhesive shall meet the requirements of Table 4.504.1.

**4.504.4 RESILIENT FLOORING SYSTEMS.** Where resilient flooring is installed , at least 80% of floor area receiving resilient flooring shall comply with one or more of the following:

1. Products compliant with the California Department of Public Health, "Standard Method for the Testing and Evaluation of Volatile Organic Chemical Emissions from Indoor Sources Using Environmental Chambers," Version 1.1, February 2010 (also known as Specification 01350), certified as a CHPS Low-Emitting Material in the Collaborative for High Performance Schools (CHPS) High Performance Products Database.
2. Products certified under UL GREENGUARD Gold (formerly the Greenguard Children & Schools program).
3. Certification under the Resilient Floor Covering Institute (RFCI) FloorScore program.
4. Meet the California Department of Public Health, "Standard Method for the Testing and Evaluation of Volatile Organic Chemical Emissions from Indoor Sources Using Environmental Chambers", Version 1.1, February 2010 (also known as Specification 01350).

**4.504.5 COMPOSITE WOOD PRODUCTS.** Hardwood plywood, particleboard and medium density fiberboard composite wood products used on the interior or exterior of the buildings shall meet the requirements for formaldehyde as specified in ARB's Air Toxics Control Measure for Composite Wood (17 CCR 93120 et seq.), by or before the dates specified in those sections, as shown in Table 4.504.5

**4.504.5.1 Documentation.** Verification of compliance with this section shall be provided as requested by the enforcing agency. Documentation shall include at least one of the following:

1. Product certifications and specifications.
2. Chain of custody certifications.
3. Product labeled and invoiced as meeting the Composite Wood Products regulation (see CCR, Title 17, Section 93120, et seq.).
4. Exterior grade products marked as meeting the PS-1 or PS-2 standards of the Engineered Wood Association, the Australian AS/NZS 2269, European 636 3S standards, and Canadian CSA 0121, CSA 0151, CSA 0153 and CSA 0325 standards.
5. Other methods acceptable to the enforcing agency.

### 4.505 INTERIOR MOISTURE CONTROL
**4.505.1 General.** Buildings shall meet or exceed the provisions of the *California Building Standards Code*.

**4.505.2 CONCRETE SLAB FOUNDATIONS.** Concrete slab foundations required to have a vapor retarder by California Building Code, Chapter 19, or concrete slab-on-ground floors required to have a vapor retarder by the California Residential Code, Chapter 5, shall also comply with this section.

**4.505.2.1 Capillary break.** A capillary break shall be installed in compliance with at least one of the following:

1. A 4-inch (101.6 mm) thick base of 1/2 inch (12.7mm) or larger clean aggregate shall be provided with a vapor barrier in direct contact with concrete and a concrete mix design, which will address bleeding, shrinkage, and curling, shall be used. For additional information, see American Concrete Institute, ACI 302.2R-06.
2. Other equivalent methods approved by the enforcing agency.
3. A slab design specified by a licensed design professional.

**4.505.3 MOISTURE CONTENT OF BUILDING MATERIALS.** Building materials with visible signs of water damage shall not be installed. Wall and floor framing shall not be enclosed when the framing members exceed 19 percent moisture content. Moisture content shall be verified in compliance with the following:

1. Moisture content shall be determined with either a probe-type or contact-type moisture meter.Equivalent moisture verification methods may be approved by the enforcing agency and shall satisfy requirements found in Section 101.8 of this code.
2. Moisture readings shall be taken at a point 2 feet (610 mm) to 4 feet (1219 mm) from the grade stamped end of each piece verified.
3. At least three random moisture readings shall be performed on wall and floor framing with documentation acceptable to the enforcing agency provided at the time of approval to enclose the wall and floor framing.

Insulation products which are visibly wet or have a high moisture content shall be replaced or allowed to dry prior to enclosure in wall or floor cavities. Wet-applied insulation products shall follow the manufacturers' drying recommendations prior to enclosure.

### 4.506 INDOOR AIR QUALITY AND EXHAUST
**4.506.1 Bathroom exhaust fans.** Each bathroom shall be mechanically ventilated and shall comply with the following:

1. Fans shall be ENERGY STAR compliant and be ducted to terminate outside the building.
2. Unless functioning as a component of a whole house ventilation system, fans must be controlled by a humidity control.

a. Humidity controls shall be capable of adjustment between a relative humidity range less than or equal to 50% to a maximum of 80%. A humidity control may utilize manual or automatic means of adjustment.
b. A humidity control may be a separate component to the exhaust fan and is not required to be integral (i.e., built-in)

**Notes:**

1. For the purposes of this section, a bathroom is a room which contains a bathtub, shower or tub/shower combination.
2. Lighting integral to bathroom exhaust fans shall comply with the *California Energy Code*.

### 4.507 ENVIRONMENTAL COMFORT
**4.507.2 HEATING AND AIR-CONDITIONING SYSTEM DESIGN.** Heating and air conditioning systems shall be sized, designed and have their equipment selected using the following methods:

1. The heat loss and heat gain is established according to ANSI/ACCA 2 Manual J - 2011 (Residential Load Calculation), ASHRAE handbooks or other equivalent design software or methods.
2. Duct systems are sized according to ANSI/ACCA 1 Manual D - 2014 (Residential Duct Systems), ASHRAE handbooks or other equivalent design software or methods.
3. Select heating and cooling equipment according to ANSI/ACCA 3 Manual S - 2014 (Residential Equipment Selection), or other equivalent design software or methods.

**Exception:** Used alternate design temperatures necessary to ensure the system functions acceptably.

## CHAPTER 7
## INSTALLER & SPECIAL INSPECTOR QUALIFICATIONS
### 702 QUALIFICATIONS
**702.1 INSTALLER TRAINING.** HVAC system installers shall be trained and certified in the proper installation of HVAC systems including ducts and equipment by a nationally or regionally recognized training or certification program. Uncertified persons may perform HVAC installations when under the direct supervision and responsibility of a person trained and certified to install HVAC systems or contractor licensed to install HVAC systems. Examples of acceptable HVAC training and certification programs include but are not limited to the following:

1. State certified apprenticeship programs.
2. Public utility training programs.
3. Training programs sponsored by trade, labor or statewide energy consulting or verification organizations.
4. Programs sponsored by manufacturing organizations.
5. Other programs acceptable to the enforcing agency.

**702.2 SPECIAL INSPECTION [HCD].** When required by the enforcing agency, the owner or the responsible entity acting as the owner's agent shall employ one or more special inspectors to provide inspection or other duties necessary to substantiate compliance with this code. Special inspectors shall demonstrate competence to the satisfaction of the enforcing agency for the particular type of inspection or task to be performed. In addition to other certifications or qualifications acceptable to the enforcing agency, the following certifications or education may be considered by the enforcing agency when evaluating the qualifications of a special inspector:

1. Certification by a national or regional green building program or standard publisher.
2. Certification by a statewide energy consulting or verification organization, such as HERS raters, building performance contractors, and home energy auditors.
3. Successful completion of a third party apprentice training program in the appropriate trade.
4. Other programs acceptable to the enforcing agency.

**Notes:**
1. Special inspectors shall be independent entities with no financial interest in the materials or the project they are inspecting for compliance with this code.
2. HERS raters are special inspectors certified by the California Energy Commission (CEC) to rate homes in California according to the Home Energy Rating System (HERS).

[BSC] When required by the enforcing agency, the owner or the responsible entity acting as the owner's agent shall employ one or more special inspectors to provide inspection or other duties necessary to substantiate compliance with this code. Special inspectors shall demonstrate competence to the satisfaction of the enforcing agency for the particular type of inspection or task to be performed. In addition, the special inspector shall have a certification from a recognized state, national or international association, as determined by the local agency. The area of certification shall be closely related to the primary job function, as determined by the local agency.

**Note:** Special inspectors shall be independent entities with no financial interest in the materials or the project they are inspecting for compliance with this code.

### 703 VERIFICATIONS
**703.1 DOCUMENTATION.** Documentation used to show compliance with this code shall include but is not limited to, construction documents, plans, specifications, builder or installer certification, inspection reports, or other methods acceptable to the enforcing agency which demonstrate substantial conformance. When specific documentation or special inspection is necessary to verify compliance, that method of compliance will be specified in the appropriate section or identified applicable checklist.

**DISCLAIMER:** *THIS DOCUMENT IS PROVIDED AND INTENDED TO BE USED AS A MEANS TO INDICATE AREAS OF COMPLIANCE WITH THE 2016 CALIFORNIA GREEN BUILDING STANDARDS (CALGREEN) CODE. DUE TO THE VARIABLES BETWEEN BUILDING DEPARTMENT JURISDICTIONS, THIS CHECKLIST IS TO BE USED ON A CASE BY CASE BASIS. THE END USER ASSUMES ALL RESPONSIBILITY ASSOCIATED WITH THE USE OF THIS DOCUMENT, INCLUDING VERIFICATION WITH THE FULL CODE.*

PROJECT NUMBER:
-

PROJECT ADDRESS:
40 W SUMMIT DR,
EMERALD HILLS, CA 94062

DRAWN FOR:
BOB JOHNSTON
40 W SUMMIT DR, EMERALD HILLS, CA 94062

DRAWN BY:
SARRAH RESHAMWALA
XAR DESIGNS
2110 STANFORD AVE, MOUNTAIN VIEW CA 94040
sarrah.reshamwala@gmail.com

FOR OFFICE USE ONLY:

SCALE AT ARCH D:

| REV | DATE | ISSUE |
|---|---|---|
| | 09/12/2024 | |
| 1 | | |
| 2 | | |

CALGREEN CHECKLIST

**40 W SUMMIT DR.**
INTERIOR REMODEL & ADDITION

**B-02**

SAN MATEO COUNTYWIDE
Water Pollution Prevention Program
Clean Water. Healthy Community.

# Construction Best Management Practices (BMPs)

Construction projects are required to implement the stormwater best management practices (BMP) on this page, as they apply to your project, all year long.

## Materials & Waste Management

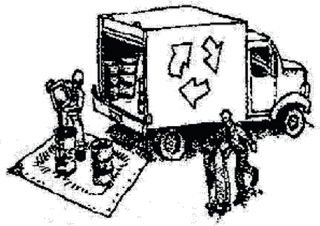

**Non-Hazardous Materials**

- ❑ Berm and cover stockpiles of sand, dirt or other construction material with tarps when rain is forecast or if not actively being used within 14 days.
- ❑ Use (but don't overuse) reclaimed water for dust control.

**Hazardous Materials**

- ❑ Label all hazardous materials and hazardous wastes (such as pesticides, paints, thinners, solvents, fuel, oil, and antifreeze) in accordance with city, county, state and federal regulations.
- ❑ Store hazardous materials and wastes in water tight containers, store in appropriate secondary containment, and cover them at the end of every work day or during wet weather or when rain is forecast.
- ❑ Follow manufacturer's application instructions for hazardous materials and be careful not to use more than necessary. Do not apply chemicals outdoors when rain is forecast within 24 hours.
- ❑ Arrange for appropriate disposal of all hazardous wastes.

**Waste Management**

- ❑ Cover waste disposal containers securely with tarps at the end of every work day and during wet weather.
- ❑ Check waste disposal containers frequently for leaks and to make sure they are not overfilled. Never hose down a dumpster on the construction site.
- ❑ Clean or replace portable toilets, and inspect them frequently for leaks and spills.
- ❑ Dispose of all wastes and debris properly. Recycle materials and wastes that can be recycled (such as asphalt, concrete, aggregate base materials, wood, gyp board, pipe, etc.)
- ❑ Dispose of liquid residues from paints, thinners, solvents, glues, and cleaning fluids as hazardous waste.

**Construction Entrances and Perimeter**

- ❑ Establish and maintain effective perimeter controls and stabilize all construction entrances and exits to sufficiently control erosion and sediment discharges from site and tracking off site.
- ❑ Sweep or vacuum any street tracking immediately and secure sediment source to prevent further tracking. Never hose down streets to clean up tracking.

## Equipment Management & Spill Control

**Maintenance and Parking**

- ❑ Designate an area, fitted with appropriate BMPs, for vehicle and equipment parking and storage.
- ❑ Perform major maintenance, repair jobs, and vehicle and equipment washing off site.
- ❑ If refueling or vehicle maintenance must be done onsite, work in a bermed area away from storm drains and over a drip pan or drop cloths big enough to collect fluids. Recycle or dispose of fluids as hazardous waste.
- ❑ If vehicle or equipment cleaning must be done onsite, clean with water only in a bermed area that will not allow rinse water to run into gutters, streets, storm drains, or surface waters.
- ❑ Do not clean vehicle or equipment onsite using soaps, solvents, degreasers, or steam cleaning equipment.

**Spill Prevention and Control**

- ❑ Keep spill cleanup materials (e.g., rags, absorbents and cat litter) available at the construction site at all times.
- ❑ Inspect vehicles and equipment frequently for and repair leaks promptly. Use drip pans to catch leaks until repairs are made.
- ❑ Clean up spills or leaks immediately and dispose of cleanup materials properly.
- ❑ Do not hose down surfaces where fluids have spilled. Use dry cleanup methods (absorbent materials, cat litter, and/or rags).
- ❑ Sweep up spilled dry materials immediately. Do not try to wash them away with water, or bury them.
- ❑ Clean up spills on dirt areas by digging up and properly disposing of contaminated soil.
- ❑ Report significant spills immediately. You are required by law to report all significant releases of hazardous materials, including oil. To report a spill: 1) Dial 911 or your local emergency response number, 2) Call the Governor's Office of Emergency Services Warning Center, (800) 852-7550 (24 hours).

## Earthmoving

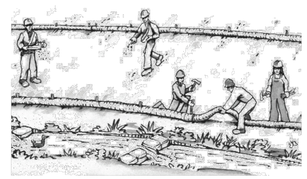

- ❑ Schedule grading and excavation work during dry weather.
- ❑ Stabilize all denuded areas, install and maintain temporary erosion controls (such as erosion control fabric or bonded fiber matrix) until vegetation is established.
- ❑ Remove existing vegetation only when absolutely necessary, and seed or plant vegetation for erosion control on slopes or where construction is not immediately planned.
- ❑ Prevent sediment from migrating offsite and protect storm drain inlets, gutters, ditches, and drainage courses by installing and maintaining appropriate BMPs, such as fiber rolls, silt fences, sediment basins, gravel bags, berms, etc.
- ❑ Keep excavated soil on site and transfer it to dump trucks on site, not in the streets.

**Contaminated Soils**

- ❑ If any of the following conditions are observed, test for contamination and contact the Regional Water Quality Control Board:
  - Unusual soil conditions, discoloration, or odor.
  - Abandoned underground tanks.
  - Abandoned wells
  - Buried barrels, debris, or trash.

## Paving/Asphalt Work

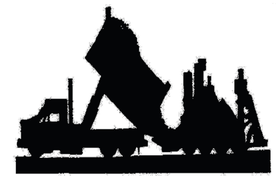

- ❑ Avoid paving and seal coating in wet weather or when rain is forecast, to prevent materials that have not cured from contacting stormwater runoff.
- ❑ Cover storm drain inlets and manholes when applying seal coat, tack coat, slurry seal, fog seal, etc.
- ❑ Collect and recycle or appropriately dispose of excess abrasive gravel or sand. Do NOT sweep or wash it into gutters.
- ❑ Do not use water to wash down fresh asphalt concrete pavement.

**Sawcutting & Asphalt/Concrete Removal**

- ❑ Protect nearby storm drain inlets when saw cutting. Use filter fabric, catch basin inlet filters, or gravel bags to keep slurry out of the storm drain system.
- ❑ Shovel, abosorb, or vacuum saw-cut slurry and dispose of all waste as soon as you are finished in one location or at the end of each work day (whichever is sooner!).
- ❑ If sawcut slurry enters a catch basin, clean it up immediately.

## Concrete, Grout & Mortar Application

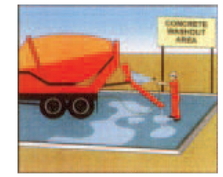


- ❑ Store concrete, grout, and mortar away from storm drains or waterways, and on pallets under cover to protect them from rain, runoff, and wind.
- ❑ Wash out concrete equipment/trucks offsite or in a designated washout area, where the water will flow into a temporary waste pit, and in a manner that will prevent leaching into the underlying soil or onto surrounding areas. Let concrete harden and dispose of as garbage.
- ❑ When washing exposed aggregate, prevent washwater from entering storm drains. Block any inlets and vacuum gutters, hose washwater onto dirt areas, or drain onto a bermed surface to be pumped and disposed of properly.

## Landscaping

- ❑ Protect stockpiled landscaping materials from wind and rain by storing them under tarps all year-round.
- ❑ Stack bagged material on pallets and under cover.
- ❑ Discontinue application of any erodible landscape material within 2 days before a forecast rain event or during wet weather.

## Painting & Paint Removal

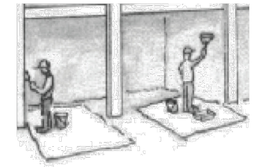

**Painting Cleanup and Removal**

- ❑ Never clean brushes or rinse paint containers into a street, gutter, storm drain, or stream.
- ❑ For water-based paints, paint out brushes to the extent possible, and rinse into a drain that goes to the sanitary sewer. Never pour paint down a storm drain.
- ❑ For oil-based paints, paint out brushes to the extent possible and clean with thinner or solvent in a proper container. Filter and reuse thinners and solvents. Dispose of excess liquids as hazardous waste.
- ❑ Paint chips and dust from non-hazardous dry stripping and sand blasting may be swept up or collected in plastic drop cloths and disposed of as trash.
- ❑ Chemical paint stripping residue and chips and dust from marine paints or paints containing lead, mercury, or tributyltin must be disposed of as hazardous waste. Lead based paint removal requires a state-certified contractor.

## Dewatering

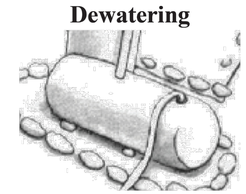

- ❑ Discharges of groundwater or captured runoff from dewatering operations must be properly managed and disposed. When possible send dewatering discharge to landscaped area or sanitary sewer. If discharging to the sanitary sewer call your local wastewater treatment plant.
- ❑ Divert run-on water from offsite away from all disturbed areas.
- ❑ When dewatering, notify and obtain approval from the local municipality before discharging water to a street gutter or storm drain. Filtration or diversion through a basin, tank, or sediment trap may be required.
- ❑ In areas of known or suspected contamination, call your local agency to determine whether the ground water must be tested. Pumped groundwater may need to be collected and hauled off-site for treatment and proper disposal.

**Storm drain polluters may be liable for fines of up to $10,000 per day!**

PROJECT NUMBER:
-

PROJECT ADDRESS:
40 W SUMMIT DR,
EMERALD HILLS, CA 94062

DRAWN FOR:
BOB JOHNSTON
40 W SUMMIT DR, EMERALD HILLS, CA 94062

DRAWN BY:
SARRAH RESHAMWALA
XAR DESIGNS
2110 STANFORD AVE, MOUNTAIN VIEW CA 94040
sarrah.reshamwala@gmail.com

FOR OFFICE USE ONLY:

SCALE AT ARCH D:

| REV | DATE | ISSUE |
|---|---|---|
| | 09/12/2024 | |
| 1 | | |
| 2 | | |

BMP's

**40 W SUMMIT DR.**
INTERIOR REMODEL & ADDITION

**B-03**

## BUILDING ENERGY ANALYSIS REPORT

**PROJECT:**

New Addition
40 W Summit Dr
Emerald Hills, CA 94062

**Project Designer:**

,

**Report Prepared by:**

Radik Musin
MECONE INC.
P.O. Box 1301
Murrieta, CA 92564
9514457213

**Job Number:**

240913

**Date:**

9/15/2024

The EnergyPro computer program has been used to perform the calculations summarized in this compliance report. This program has approval and is authorized by the California Energy Commission for use with both the Residential and Nonresidential 2022 Building Energy Efficiency Standards.

This program developed by EnergySoft, LLC – www.energysoft.com.

## TABLE OF CONTENTS

| | |
|---|---|
| Cover Page | 1 |
| Table of Contents | 2 |
| Form CF1R-PRF-01-E Certificate of Compliance | 3 |
| Form CF3R-EXC-20-H Certificate of Verification | 18 |
| Mandatory Measures | 21 |



**GENERAL INFORMATION**

| | | | | | |
|---|---|---|---|---|---|
| 01 | Project Name | New Addition | | | |
| 02 | Run Title | Title 24 Analysis | | | |
| 03 | Project Location | 40 W Summit Dr | | | |
| 04 | City | Emerald Hills | 05 | Standards Version | 2022 |
| 06 | Zip code | 94062 | 07 | Software Version | EnergyPro 9.3 |
| 08 | Climate Zone | 3 | 09 | Front Orientation (deg/ Cardinal) | 180 |
| 10 | Building Type | Single family | 11 | Number of Dwelling Units | 1 |
| 12 | Project Scope | Addition and/or Alteration | 13 | Number of Bedrooms | 4 |
| 14 | Addition Cond. Floor Area ($ft^2$) | 563 | 15 | Number of Stories | 2 |
| 16 | Existing Cond. Floor Area ($ft^2$) | 2030 | 17 | Fenestration Average U-factor | 0.31 |
| 18 | Total Cond. Floor Area ($ft^2$) | 2593 | 19 | Glazing Percentage (%) | 16.49% |
| 20 | ADU Bedroom Count | n/a | 21 | ADU Conditioned Floor Area | n/a |
| 22 | Fuel Type | Natural gas | 23 | No Dwelling Unit: | No |

**COMPLIANCE RESULTS**

| | |
|---|---|
| 01 | Building Complies with Computer Performance |
| 02 | This building incorporates features that require field testing and/or verification by a certified HERS rater under the supervision of a CEC-approved HERS provider. |
| 03 | This building incorporates one or more Special Features shown below |





**ENERGY USE SUMMARY**

| Energy Use | Standard Design Source Energy (EDR1) (kBtu/$ft^2$ -yr) | Standard Design TDV Energy (EDR2) (kTDV/$ft^2$ -yr) | Proposed Design Source Energy (EDR1) (kBtu/$ft^2$ -yr) | Proposed Design TDV Energy (EDR2) (kTDV/$ft^2$ -yr) | Compliance Margin (EDR1) | Compliance Margin (EDR2) |
|---|---|---|---|---|---|---|
| Space Heating | 0 | 50.18 | 0 | 58.26 | 0 | -8.08 |
| Space Cooling | 0 | 6.57 | 0 | 5.26 | 0 | 1.31 |
| IAQ Ventilation | 0 | 0 | 0 | 0 | 0 | 0 |
| Water Heating | 0 | 25.67 | 0 | 16.6 | 0 | 9.07 |
| Self Utilization/Flexibility Credit | | | | 0 | | 0 |
| Efficiency Compliance Total | **0** | **82.42** | **0** | **80.12** | **0** | **2.3** |
| Photovoltaics | | 0 | | 0 | | |
| Battery | | | | 0 | | |
| Flexibility | | | | | | |
| Indoor Lighting | 0 | 6.91 | 0 | 6.91 | | |
| Appl. & Cooking | 0 | 10.39 | 0 | 10.37 | | |
| Plug Loads | 0 | 26.11 | 0 | 26.11 | | |
| Outdoor Lighting | 0 | 1.76 | 0 | 1.76 | | |
| TOTAL COMPLIANCE | **0** | **127.59** | **0** | **125.27** | | |





**ENERGY USE INTENSITY**

| | Standard Design (kBtu/$ft^2$ - yr ) | Proposed Design (kBtu/$ft^2$ - yr ) | Compliance Margin (kBtu/$ft^2$ - yr ) | Margin Percentage |
|---|---|---|---|---|
| Gross EUI[1] | 25.6 | 24.97 | 0.63 | 2.46 |
| Net EUI[2] | 25.6 | 24.97 | 0.63 | 2.46 |

Notes
1. Gross EUI is Energy Use Total (not including PV) / Total Building Area.
2. Net EUI is Energy Use Total (including PV) / Total Building Area.

**REQUIRED SPECIAL FEATURES**

The following are features that must be installed as condition for meeting the modeled energy performance for this computer analysis.

- Ceiling has high level of insulation

**HERS FEATURE SUMMARY**

The following is a summary of the features that must be field-verified by a certified HERS Rater as a condition for meeting the modeled energy performance for this computer analysis. Additional detail is provided in the building tables below. Registered CF2Rs and CF3Rs are required to be completed in the HERS Registry

- Kitchen range hood
- Verified Existing Conditions
- Minimum Airflow
- Fan Efficacy Watts/CFM
- Duct leakage testing

**BUILDING - FEATURES INFORMATION**

| 01 | 02 | 03 | 04 | 05 | 06 | 07 |
|---|---|---|---|---|---|---|
| Project Name | Conditioned Floor Area ($ft^2$) | Number of Dwelling Units | Number of Bedrooms | Number of Zones | Number of Ventilation Cooling Systems | Number of Water Heating Systems |
| New Addition | 2593 | 1 | 4 | 4 | 0 | 2 |





**ZONE INFORMATION**

| 01 | 02 | 03 | 04 | 05 | 06 | 07 |
|---|---|---|---|---|---|---|
| Zone Name | Zone Type | HVAC System Name | Zone Floor Area ($ft^2$) | Avg. Ceiling Height | Water Heating System 1 | Status |
| (E) Upper Floor | Conditioned | (E) HVAC1 | 1580 | 8 | DHW Sys 1 | Existing Unchanged |
| (A) Upper Floor | Conditioned | (E) HVAC1 | 89 | 8 | DHW Sys 1 | New |
| (E) Lower Floor | Conditioned | (E) HVAC1 | 450 | 8 | DHW Sys 1 | Existing Unchanged |
| (A) Lower Floor | Conditioned | (E) HVAC1 | 474 | 8 | DHW Sys 1 | New |

**OPAQUE SURFACES**

| 01 | 02 | 03 | 04 | 05 | 06 | 07 | 08 | 09 | 10 | 11 |
|---|---|---|---|---|---|---|---|---|---|---|
| Name | Zone | Construction | Azimuth | Orientation | Gross Area ($ft^2$) | Window and Door Area (ft2) | Tilt (deg) | Wall Exceptions | Status | Verified Existing Condition |
| (E) North Wall | (E) Upper Floor | Default Wall Prior to 197 | 0 | Back | 115.5 | 24 | 90 | none | Existing | No |
| (A) North Wall | (E) Upper Floor | New R-15 Wall | 0 | Back | 128 | 109.33 | 90 | none | Altered | No |
| (E) East Wall | (E) Upper Floor | Default Wall Prior to 197 | 90 | Right | 257.8 | 30 | 90 | none | Existing | No |
| (E) South Wall | (E) Upper Floor | Default Wall Prior to 197 | 180 | Front | 245.33 | 66 | 90 | none | Existing | No |
| (E) West Wall | (E) Upper Floor | Default Wall Prior to 197 | 270 | Left | 215 | 0 | 90 | none | Existing | No |
| New North Wall | (A) Upper Floor | New R-15 Wall | 0 | Back | 88 | 10 | 90 | Extension | New | n/a |
| New East Wall | (A) Upper Floor | New R-15 Wall | 90 | Right | 112 | 16 | 90 | none | New | n/a |
| (A) East Wall | (E) Lower Floor | New R-15 Wall | 90 | Right | 48 | 16 | 90 | none | Altered | No |
| (E) West Wall 2 | (E) Lower Floor | Default Wall Prior to 197 | 270 | Left | 126 | 12 | 90 | none | Existing | No |
| New North Wall 2 | (A) Lower Floor | New R-15 Wall | 0 | Back | 354 | 144.14 | 90 | none | New | n/a |
| New East Wall 2 | (A) Lower Floor | New R-15 Wall | 90 | Right | 163 | 0 | 90 | Extension | New | n/a |



PROJECT NUMBER:
-

PROJECT ADDRESS:
40 W SUMMIT DR,
EMERALD HILLS, CA 94062

DRAWN FOR:
BOB JOHNSTON
40 W SUMMIT DR, EMERALD HILLS, CA 94062

DRAWN BY:
SARRAH RESHAMWALA
XAR DESIGNS
2110 STANFORD AVE, MOUNTAIN VIEW CA 94040
sarrah.reshamwala@gmail.com

FOR OFFICE USE ONLY:

SCALE AT ARCH D:

| REV | DATE | ISSUE |
|---|---|---|
| | 09/12/2024 | |
| 1 | | |
| 2 | | |

TITLE 24 COMPLIANCE

40 W SUMMIT DR.
INTERIOR REMODEL & ADDITION

T-01

**CERTIFICATE OF COMPLIANCE - RESIDENTIAL PERFORMANCE COMPLIANCE METHOD** **CF1R-PRF-01-E**

**Project Name:** New Addition **Calculation Date/Time:** 2024-09-15T20:11:20-07:00 **(Page 5 of 15)**

**Calculation Description:** Title 24 Analysis **Input File Name:** Title 24 - 40W Summit Dr.ribd22x

**OPAQUE SURFACES**

| 01 | 02 | 03 | 04 | 05 | 06 | 07 | 08 | 09 | 10 | 11 |
|---|---|---|---|---|---|---|---|---|---|---|
| Name | Zone | Construction | Azimuth | Orientation | Gross Area ($ft^2$) | Window and Door Area (ft2) | Tilt (deg) | Wall Exceptions | Status | Verified Existing Condition |
| New West Wall | (A) Lower Floor | New R-15 Wall | 270 | Left | 90 | 0 | 90 | Extension | New | n/a |
| New Interior Surface | (A) Upper Floor>>(E) Upper Floor | New Interior Wall | n/a | n/a | 100 | 0 | n/a | | New | n/a |
| New Interior Surface 2 | (A) Upper Floor>>(E) Upper Floor | New Interior Wall | n/a | n/a | 50 | 0 | n/a | | New | n/a |
| New Interior Surface 3 | (A) Lower Floor>>(E) Lower Floor | New Interior Wall | n/a | n/a | 150 | 0 | n/a | | New | n/a |
| (E) Roof 2 | (E) Upper Floor | Default Roof 1978 to Pres | n/a | n/a | 1552 | n/a | n/a | | Existing | No |
| New R38 Roof 2 | (A) Upper Floor | New R-38 Attic | n/a | n/a | 89 | n/a | n/a | | New | n/a |
| (E) Raised Floor | (E) Upper Floor | Default Floor Crawlspace | n/a | n/a | 1130 | n/a | n/a | | Existing | No |
| (E) Raised Floor 2 | (E) Lower Floor | Default Floor Crawlspace | n/a | n/a | 450 | n/a | n/a | | Existing | No |
| New Raised Floor | (A) Lower Floor | R-19 Floor Crawlspace | n/a | n/a | 474 | n/a | n/a | | New | n/a |
| Underground Wall | (E) Lower Floor | Existing UG Wall | n/a | n/a | 312 | n/a | n/a | | Existing | No |
| (E) Interior Surface | (E) Upper Floor | Existing Interior Floor | n/a | n/a | 450 | n/a | n/a | | Existing | No |
| New Interior Surface 4 | (A) Upper Floor | New Interior Floor | n/a | n/a | 89 | n/a | n/a | | New | n/a |



*NOTICE: This document has been generated by California Home Energy Efficiency Rating Services (CHEERS) using information uploaded by third parties not affiliated with or related to CHEERS. Therefore, CHEERS is not responsible for, and cannot guarantee, the accuracy or completeness of the information contained in this document.*



**CERTIFICATE OF COMPLIANCE - RESIDENTIAL PERFORMANCE COMPLIANCE METHOD** **CF1R-PRF-01-E**

**Project Name:** New Addition **Calculation Date/Time:** 2024-09-15T20:11:20-07:00 **(Page 6 of 15)**

**Calculation Description:** Title 24 Analysis **Input File Name:** Title 24 - 40W Summit Dr.ribd22x

**OPAQUE SURFACES - CATHEDRAL CEILINGS**

| 01 | 02 | 03 | 04 | 05 | 06 | 07 | 08 | 09 | 10 | 11 | 12 | 13 | 14 |
|---|---|---|---|---|---|---|---|---|---|---|---|---|---|
| Name | Zone | Construction | Azimuth | Orientation | Area ($ft^2$) | Skylight Area ($ft^2$) | Roof Rise (x in 12) | Roof Reflectance | Roof Emittance | Cool Roof | Status | Verified Existing Condition | Existing Construction |
| (E) Roof | (E) Upper Floor | Default Roof 1978 to Pres1 | 0 | Back | 28.1 | 28 | 4 | 0.1 | 0.85 | No | Existing | No | |
| New R38 Roof | (A) Lower Floor | New R-38 Roof No Attic | 0 | Back | 385 | 0 | 0 | 0.1 | 0.85 | No | New | n/a | |

**ATTIC**

| 01 | 02 | 03 | 04 | 05 | 06 | 07 | 08 | 09 | 10 |
|---|---|---|---|---|---|---|---|---|---|
| Name | Construction | Type | Roof Rise (x in 12) | Roof Reflectance | Roof Emittance | Radiant Barrier | Cool Roof | Status | Verified Existing Condition |
| Attic (E) Upper Floor | Attic Roof(E) Upper Floor | Ventilated | 4 | 0.1 | 0.85 | No | No | Existing | No |
| Attic (A) Upper Floor | Attic Roof(A) Upper Floor | Ventilated | 4 | 0.1 | 0.85 | No | No | New | n/a |

**FENESTRATION / GLAZING**

| 01 | 02 | 03 | 04 | 05 | 06 | 07 | 08 | 09 | 10 | 11 | 12 | 13 | 14 | 15 | 16 |
|---|---|---|---|---|---|---|---|---|---|---|---|---|---|---|---|
| Name | Type | Surface | Orientation | Azimuth | Width (ft) | Height (ft) | Mult. | Area ($ft^2$) | U-factor | U-factor Source | SHGC | SHGC Source | Exterior Shading | Status | Verified Existing Condition |
| (E) Window | Window | (E) North Wall | Back | 0 | | | 1 | 24 | 0.71 | Table 110.6-A | 0.73 | Table 110.6-B | Bug Screen | Existing | No |
| (A) Glass Door part-A | Window | (A) North Wall | Back | 0 | | | 1 | 66 | 0.3 | NFRC | 0.45 | NFRC | Bug Screen | New | NA |
| (N) Glass Door part-B | Window | (A) North Wall | Back | 0 | | | 1 | 43.33 | 0.3 | NFRC | 0.45 | NFRC | Bug Screen | New | NA |
| (E) Window 2 | Window | (E) East Wall | Right | 90 | | | 1 | 16 | 0.71 | Table 110.6-A | 0.73 | Table 110.6-B | Bug Screen | Existing | No |



*NOTICE: This document has been generated by California Home Energy Efficiency Rating Services (CHEERS) using information uploaded by third parties not affiliated with or related to CHEERS. Therefore, CHEERS is not responsible for, and cannot guarantee, the accuracy or completeness of the information contained in this document.*



**CERTIFICATE OF COMPLIANCE - RESIDENTIAL PERFORMANCE COMPLIANCE METHOD** **CF1R-PRF-01-E**

**Project Name:** New Addition **Calculation Date/Time:** 2024-09-15T20:11:20-07:00 **(Page 7 of 15)**

**Calculation Description:** Title 24 Analysis **Input File Name:** Title 24 - 40W Summit Dr.ribd22x

**FENESTRATION / GLAZING**

| 01 | 02 | 03 | 04 | 05 | 06 | 07 | 08 | 09 | 10 | 11 | 12 | 13 | 14 | 15 | 16 |
|---|---|---|---|---|---|---|---|---|---|---|---|---|---|---|---|
| Name | Type | Surface | Orientation | Azimuth | Width (ft) | Height (ft) | Mult. | Area ($ft^2$) | U-factor | U-factor Source | SHGC | SHGC Source | Exterior Shading | Status | Verified Existing Condition |
| (E) Window 3 | Window | (E) East Wall | Right | 90 | | | 1 | 7 | 0.71 | Table 110.6-A | 0.73 | Table 110.6-B | Bug Screen | Existing | No |
| (E) Window 4 | Window | (E) East Wall | Right | 90 | | | 1 | 7 | 0.71 | Table 110.6-A | 0.73 | Table 110.6-B | Bug Screen | Existing | No |
| (E) Window 5 | Window | (E) South Wall | Front | 180 | | | 1 | 20 | 0.71 | Table 110.6-A | 0.73 | Table 110.6-B | Bug Screen | Existing | No |
| (E) Window 6 | Window | (E) South Wall | Front | 180 | | | 1 | 6 | 0.71 | Table 110.6-A | 0.73 | Table 110.6-B | Bug Screen | Existing | No |
| (E) Sidelight Window | Window | (E) South Wall | Front | 180 | | | 1 | 6 | 0.71 | Table 110.6-A | 0.73 | Table 110.6-B | Bug Screen | Existing | No |
| (E) Sidelight Window 2 | Window | (E) South Wall | Front | 180 | | | 1 | 6 | 0.71 | Table 110.6-A | 0.73 | Table 110.6-B | Bug Screen | Existing | No |
| (N) Window | Window | New North Wall | Back | 0 | | | 1 | 10 | 0.3 | NFRC | 0.45 | NFRC | Bug Screen | New | NA |
| (N) Window 2 | Window | New East Wall | Right | 90 | | | 1 | 16 | 0.3 | NFRC | 0.45 | NFRC | Bug Screen | New | NA |
| (N) Window 3 | Window | (A) East Wall | Right | 90 | | | 1 | 16 | 0.3 | NFRC | 0.45 | NFRC | Bug Screen | New | NA |
| (N) Window 4 | Window | (E) West Wall 2 | Left | 270 | | | 1 | 6 | 0.3 | NFRC | 0.45 | NFRC | Bug Screen | New | NA |
| (N) Window 5 | Window | (E) West Wall 2 | Left | 270 | | | 1 | 6 | 0.3 | NFRC | 0.45 | NFRC | Bug Screen | New | NA |
| (N) Window 6 | Window | New North Wall 2 | Back | 0 | | | 1 | 16 | 0.3 | NFRC | 0.45 | NFRC | Bug Screen | New | NA |



*NOTICE: This document has been generated by California Home Energy Efficiency Rating Services (CHEERS) using information uploaded by third parties not affiliated with or related to CHEERS. Therefore, CHEERS is not responsible for, and cannot guarantee, the accuracy or completeness of the information contained in this document.*



**CERTIFICATE OF COMPLIANCE - RESIDENTIAL PERFORMANCE COMPLIANCE METHOD** **CF1R-PRF-01-E**

**Project Name:** New Addition **Calculation Date/Time:** 2024-09-15T20:11:20-07:00 **(Page 8 of 15)**

**Calculation Description:** Title 24 Analysis **Input File Name:** Title 24 - 40W Summit Dr.ribd22x

**FENESTRATION / GLAZING**

| 01 | 02 | 03 | 04 | 05 | 06 | 07 | 08 | 09 | 10 | 11 | 12 | 13 | 14 | 15 | 16 |
|---|---|---|---|---|---|---|---|---|---|---|---|---|---|---|---|
| Name | Type | Surface | Orientation | Azimuth | Width (ft) | Height (ft) | Mult. | Area ($ft^2$) | U-factor | U-factor Source | SHGC | SHGC Source | Exterior Shading | Status | Verified Existing Condition |
| (N) Glass Door | Window | New North Wall 2 | Back | 0 | | | 1 | 41 | 0.3 | NFRC | 0.45 | NFRC | Bug Screen | New | NA |
| (N) Window 7 | Window | New North Wall 2 | Back | 0 | | | 1 | 22.5 | 0.3 | NFRC | 0.45 | NFRC | Bug Screen | New | NA |
| (N) Glass Door 2 | Window | New North Wall 2 | Back | 0 | | | 1 | 54.64 | 0.3 | NFRC | 0.45 | NFRC | Bug Screen | New | NA |
| (N) Window 8 | Window | New North Wall 2 | Back | 0 | | | 1 | 10 | 0.3 | NFRC | 0.45 | NFRC | Bug Screen | New | NA |
| New Skylight S1 | Skylight | (E) Roof | Back | 0 | | | 1 | 4 | 0.44 | NFRC | 0.25 | NFRC | | New | NA |
| New Skylight S2 | Skylight | (E) Roof | Back | 0 | | | 1 | 16 | 0.44 | NFRC | 0.25 | NFRC | | New | NA |
| New Skylight S3 | Skylight | (E) Roof | Back | 0 | | | 1 | 8 | 0.44 | NFRC | 0.25 | NFRC | | New | NA |

**OPAQUE DOORS**

| 01 | 02 | 03 | 04 | 05 | 06 |
|---|---|---|---|---|---|
| Name | Side of Building | Area ($ft^2$) | U-factor | Status | Verified Existing Condition |
| Entry Door D1 | (E) South Wall | 28 | 0.5 | New | n/a |



*NOTICE: This document has been generated by California Home Energy Efficiency Rating Services (CHEERS) using information uploaded by third parties not affiliated with or related to CHEERS. Therefore, CHEERS is not responsible for, and cannot guarantee, the accuracy or completeness of the information contained in this document.*



**CERTIFICATE OF COMPLIANCE - RESIDENTIAL PERFORMANCE COMPLIANCE METHOD** **CF1R-PRF-01-E**

**Project Name:** New Addition **Calculation Date/Time:** 2024-09-15T20:11:20-07:00 **(Page 9 of 15)**

**Calculation Description:** Title 24 Analysis **Input File Name:** Title 24 - 40W Summit Dr.ribd22x

**OPAQUE SURFACE CONSTRUCTIONS**

| 01 | 02 | 03 | 04 | 05 | 06 | 07 | 08 |
|---|---|---|---|---|---|---|---|
| Construction Name | Surface Type | Construction Type | Framing | Total Cavity R-value | Interior / Exterior Continuous R-value | U-factor | Assembly Layers |
| Default Wall Prior to 197 | Exterior Walls | Wood Framed Wall | 2x4 @ 16 in. O. C. | R-0 | None / None | 0.361 | Inside Finish: Gypsum Board<br>Cavity / Frame: no insul. / 2x4<br>Exterior Finish: 3 Coat Stucco |
| New R-15 Wall | Exterior Walls | Wood Framed Wall | 2x4 @ 16 in. O. C. | R-15 | None / None | 0.095 | Inside Finish: Gypsum Board<br>Cavity / Frame: R-15 / 2x4<br>Exterior Finish: 3 Coat Stucco |
| Default Roof 1978 to Pres1 | Cathedral Ceilings | Wood Framed Ceiling | 2x4 @ 16 in. O. C. | R-19 | None / None | 0.061 | Roofing: Light Roof (Asphalt Shingle)<br>Roof Deck: Wood<br>Siding/sheathing/decking<br>Cavity / Frame: R-19 / 2x4<br>Inside Finish: Gypsum Board |
| New R-38 Roof No Attic | Cathedral Ceilings | Wood Framed Ceiling | 2x12 @ 16 in. O. C. | R-38 | None / None | 0.03 | Roofing: Light Roof (Asphalt Shingle)<br>Roof Deck: Wood<br>Siding/sheathing/decking<br>Cavity / Frame: R-38 / 2x12<br>Inside Finish: Gypsum Board |
| New Interior Wall | Interior Walls | Wood Framed Wall | 2x4 @ 16 in. O. C. | R-0 | None / None | 0.277 | Inside Finish: Gypsum Board<br>Cavity / Frame: no insul. / 2x4<br>Other Side Finish: Gypsum Board |
| Attic Roof(E) Upper Floor | Attic Roofs | Wood Framed Ceiling | 2x4 @ 24 in. O. C. | R-0 | None / 0 | 0.644 | Roofing: Light Roof (Asphalt Shingle)<br>Roof Deck: Wood<br>Siding/sheathing/decking<br>Cavity / Frame: no insul. / 2x4 |
| Attic Roof(A) Upper Floor | Attic Roofs | Wood Framed Ceiling | 2x4 @ 24 in. O. C. | R-0 | None / 0 | 0.644 | Roofing: Light Roof (Asphalt Shingle)<br>Roof Deck: Wood<br>Siding/sheathing/decking<br>Cavity / Frame: no insul. / 2x4 |



*NOTICE: This document has been generated by California Home Energy Efficiency Rating Services (CHEERS) using information uploaded by third parties not affiliated with or related to CHEERS. Therefore, CHEERS is not responsible for, and cannot guarantee, the accuracy or completeness of the information contained in this document.*



**CERTIFICATE OF COMPLIANCE - RESIDENTIAL PERFORMANCE COMPLIANCE METHOD** **CF1R-PRF-01-E**

**Project Name:** New Addition **Calculation Date/Time:** 2024-09-15T20:11:20-07:00 **(Page 10 of 15)**

**Calculation Description:** Title 24 Analysis **Input File Name:** Title 24 - 40W Summit Dr.ribd22x

**OPAQUE SURFACE CONSTRUCTIONS**

| 01 | 02 | 03 | 04 | 05 | 06 | 07 | 08 |
|---|---|---|---|---|---|---|---|
| Construction Name | Surface Type | Construction Type | Framing | Total Cavity R-value | Interior / Exterior Continuous R-value | U-factor | Assembly Layers |
| Default Floor Crawlspace | Floors Over Crawlspace | Wood Framed Floor | 2x12 @ 16 in. O. C. | R-0 | None / None | 0.216 | Floor Surface: Carpeted<br>Floor Deck: Wood<br>Siding/sheathing/decking<br>Cavity / Frame: no insul. / 2x12 |
| R-19 Floor Crawlspace | Floors Over Crawlspace | Wood Framed Floor | 2x10 @ 16 in. O. C. | R-19 | None / None | 0.046 | Floor Surface: Carpeted<br>Floor Deck: Wood<br>Siding/sheathing/decking<br>Cavity / Frame: R-19 / 2x10 |
| Default Roof 1978 to Pres | Ceilings (below attic) | Wood Framed Ceiling | 2x4 @ 16 in. O. C. | R-19 | None / None | 0.049 | Over Ceiling Joists: R-9.9 insul.<br>Cavity / Frame: R-9.1 / 2x4<br>Inside Finish: Gypsum Board |
| New R-38 Attic | Ceilings (below attic) | Wood Framed Ceiling | 2x4 @ 24 in. O. C. | R-38 | None / None | 0.025 | Over Ceiling Joists: R-28.9 insul.<br>Cavity / Frame: R-9.1 / 2x4<br>Inside Finish: Gypsum Board |
| Existing Interior Floor | Interior Floors | Wood Framed Floor | 2x12 @ 16 in. O. C. | R-0 | None / None | 0.196 | Floor Surface: Carpeted<br>Floor Deck: Wood<br>Siding/sheathing/decking<br>Cavity / Frame: no insul. / 2x12<br>Ceiling Below Finish: Gypsum Board |
| New Interior Floor | Interior Floors | Wood Framed Floor | 2x12 @ 16 in. O. C. | R-0 | None / None | 0.196 | Floor Surface: Carpeted<br>Floor Deck: Wood<br>Siding/sheathing/decking<br>Cavity / Frame: no insul. / 2x12<br>Ceiling Below Finish: Gypsum Board |
| Existing UG Wall | Underground Walls | Concrete / ICF / Brick | None | n/a | None / None | 0.892 | Inside Finish: Gypsum Board<br>Mass Layer: 8 in. Concrete |



*NOTICE: This document has been generated by California Home Energy Efficiency Rating Services (CHEERS) using information uploaded by third parties not affiliated with or related to CHEERS. Therefore, CHEERS is not responsible for, and cannot guarantee, the accuracy or completeness of the information contained in this document.*



PROJECT NUMBER:
-

PROJECT ADDRESS:
40 W SUMMIT DR,
EMERALD HILLS, CA 94062

DRAWN FOR:
BOB JOHNSTON
40 W SUMMIT DR, EMERALD HILLS, CA 94062

DRAWN BY:
SARRAH RESHAMWALA
XAR DESIGNS
2110 STANFORD AVE, MOUNTAIN VIEW CA 94040
sarrah.reshamwala@gmail.com

FOR OFFICE USE ONLY:

SCALE AT ARCH D:

| REV | DATE | ISSUE |
|---|---|---|
| | 09/12/2024 | |
| 1 | | |
| 2 | | |

TITLE 24 COMPLIANCE

**40 W SUMMIT DR.**
INTERIOR REMODEL & ADDITION

**T-02**

**CERTIFICATE OF COMPLIANCE - RESIDENTIAL PERFORMANCE COMPLIANCE METHOD** **CF1R-PRF-01-E**

**Project Name:** New Addition **Calculation Date/Time:** 2024-09-15T20:11:20-07:00 **(Page 11 of 15)**

**Calculation Description:** Title 24 Analysis **Input File Name:** Title 24 - 40W Summit Dr.ribd22x

**BUILDING ENVELOPE - HERS VERIFICATION**

| 01 | 02 | 03 | 04 | 05 |
|---|---|---|---|---|
| **Quality Insulation Installation (QII)** | **High R-value Spray Foam Insulation** | **Building Envelope Air Leakage** | **CFM50** | **CFM50** |
| Not Required | Not Required | N/A | n/a | n/a |

**WATER HEATING SYSTEMS**

| 01 | 02 | 03 | 04 | 05 | 06 | 07 | 08 | 09 | 10 | 11 | 12 |
|---|---|---|---|---|---|---|---|---|---|---|---|
| **Name** | **System Type** | **Distribution Type** | **Water Heater Name** | **Number of Units** | **Solar Heating System** | **Compact Distribution** | **HERS Verification** | **Water Heater Name (#)** | **Status** | **Verified Existing Condition** | **Existing Water Heating System** |
| DHW Sys 1 | Domestic Hot Water (DHW) | Standard | DHW Heater 1 | 1 | n/a | None | n/a | DHW Heater 1 (1) | Altered | Yes | |

**WATER HEATERS**

| 01 | 02 | 03 | 04 | 05 | 06 | 07 | 08 | 09 | 10 | 11 | 12 | 13 | 14 | 15 |
|---|---|---|---|---|---|---|---|---|---|---|---|---|---|---|
| **Name** | **Heating Element Type** | **Tank Type** | **# of Units** | **Tank Vol. (gal)** | **Heating Efficiency Type** | **Efficiency** | **Rated Input Type** | **Input Rating or Pilot** | **Tank Insulation R-value (Int/Ext)** | **Standby Loss or Recovery Eff** | **1st Hr. Rating or Flow Rate** | **Tank Location** | **Status** | **Verified Existing Condition** |
| DHW Heater 1 | Gas | Consumer Instantaneous | 1 | 0 | UEF | 0.95 | Btu/Hr | 200000 | 0 | n/a | n/a | | Altered | Yes |

**WATER HEATING - HERS VERIFICATION**

| 01 | 02 | 03 | 04 | 05 | 06 | 07 |
|---|---|---|---|---|---|---|
| **Name** | **Pipe Insulation** | **Parallel Piping** | **Compact Distribution** | **Compact Distribution Type** | **Recirculation Control** | **Shower Drain Water Heat Recovery** |
| DHW Sys 1 - 1/1 | Not Required | Not Required | Not Required | None | Not Required | Not Required |



*NOTICE: This document has been generated by California Home Energy Efficiency Rating Services (CHEERS) using information uploaded by third parties not affiliated with or related to CHEERS. Therefore, CHEERS is not responsible for, and cannot guarantee, the accuracy or completeness of the information contained in this document.*



**CERTIFICATE OF COMPLIANCE - RESIDENTIAL PERFORMANCE COMPLIANCE METHOD** **CF1R-PRF-01-E**

**Project Name:** New Addition **Calculation Date/Time:** 2024-09-15T20:11:20-07:00 **(Page 12 of 15)**

**Calculation Description:** Title 24 Analysis **Input File Name:** Title 24 - 40W Summit Dr.ribd22x

**SPACE CONDITIONING SYSTEMS**

| 01 | 02 | 03 | 04 | 05 | 06 | 07 | 08 | 09 | 10 | 11 | 12 |
|---|---|---|---|---|---|---|---|---|---|---|---|
| **Name** | **System Type** | **Heating Unit Name** | **Heating Equipment Count** | **Cooling Unit Name** | **Cooling Equipment Count** | **Fan Name** | **Distribution Name** | **Required Thermostat Type** | **Status** | **Verified Existing Condition** | **Existing HVAC System** |
| (E) HVAC1 | Heating and cooling system other | Heating Component 1 | 1 | Cooling Component 1 | 1 | HVAC Fan 1 | Air Distribution System 1 | n/a | Existing | No | |

**HVAC - HEATING UNIT TYPES**

| 01 | 02 | 03 | 04 | 05 |
|---|---|---|---|---|
| **Name** | **System Type** | **Number of Units** | **Heating Efficiency** | **Heating Unit Brand** |
| Heating Component 1 | Central gas furnace | 1 | AFUE - 80 | n/a |

**HVAC - COOLING UNIT TYPES**

| 01 | 02 | 03 | 04 | 05 | 06 | 07 | 08 | 09 |
|---|---|---|---|---|---|---|---|---|
| **Name** | **System Type** | **Number of Units** | **Efficiency Metric** | **Efficiency EER/EER2/CEER** | **Efficiency SEER/SEER2** | **Zonally Controlled** | **Mulit-speed Compressor** | **HERS Verification** |
| Cooling Component 1 | Central split AC | 1 | EER/SEER | 11.7 | 14 | Not Zonal | Single Speed | Cooling Component 1-hers-cool |



*NOTICE: This document has been generated by California Home Energy Efficiency Rating Services (CHEERS) using information uploaded by third parties not affiliated with or related to CHEERS. Therefore, CHEERS is not responsible for, and cannot guarantee, the accuracy or completeness of the information contained in this document.*



**CERTIFICATE OF COMPLIANCE - RESIDENTIAL PERFORMANCE COMPLIANCE METHOD** **CF1R-PRF-01-E**

**Project Name:** New Addition **Calculation Date/Time:** 2024-09-15T20:11:20-07:00 **(Page 13 of 15)**

**Calculation Description:** Title 24 Analysis **Input File Name:** Title 24 - 40W Summit Dr.ribd22x

**HVAC - DISTRIBUTION SYSTEMS**

| 01 | 02 | 03 | 04 | 05 | 06 | 07 | 08 | 09 | 10 | 11 | 12 | 13 | 14 | 15 | 16 |
|---|---|---|---|---|---|---|---|---|---|---|---|---|---|---|---|
| **Name** | **Type** | **Design Type** | **Duct Ins. R-value** | | **Duct Location** | | **Surface Area** | | **Bypass Duct** | **Duct Leakage** | **HERS Verification** | **Status** | **Verified Existing Condition** | **Existing Distribution system** | **New Ducts >= 25 ft** |
| | | | **Supply** | **Return** | **Supply** | **Return** | **Supply** | **Return** | | | | | | | |
| Air Distribution System 1 | Unconditioned attic | Non-Verified | R-6 | R-6 | Attic | Attic | n/a | n/a | No Bypass Duct | Sealed and Tested | Air Distribution System 1-hers-dist | Alteration | No | | n/a |

**HVAC DISTRIBUTION - HERS VERIFICATION**

| 01 | 02 | 03 | 04 | 05 | 06 | 07 | 08 | 09 |
|---|---|---|---|---|---|---|---|---|
| **Name** | **Duct Leakage Verification** | **Duct Leakage Target (%)** | **Verified Duct Location** | **Verified Duct Design** | **Buried Ducts** | **Deeply Buried Ducts** | **Low-leakage Air Handler** | **Low Leakage Ducts Entirely in Conditioned Space** |
| Air Distribution System 1-hers-dist | Yes | 10.0 | Not Required | Not Required | Not Required | Credit not taken | Not Required | No |

**HVAC - FAN SYSTEMS**

| 01 | 02 | 03 | 04 |
|---|---|---|---|
| **Name** | **Type** | **Fan Power (Watts/CFM)** | **Name** |
| HVAC Fan 1 | HVAC Fan | 0.58 | HVAC Fan 1-hers-fan |

**HVAC FAN SYSTEMS - HERS VERIFICATION**

| 01 | 02 | 03 |
|---|---|---|
| **Name** | **Verified Fan Watt Draw** | **Required Fan Efficacy (Watts/CFM)** |
| HVAC Fan 1-hers-fan | Required | 0.58 |



*NOTICE: This document has been generated by California Home Energy Efficiency Rating Services (CHEERS) using information uploaded by third parties not affiliated with or related to CHEERS. Therefore, CHEERS is not responsible for, and cannot guarantee, the accuracy or completeness of the information contained in this document.*



**CERTIFICATE OF COMPLIANCE - RESIDENTIAL PERFORMANCE COMPLIANCE METHOD** **CF1R-PRF-01-E**

**Project Name:** New Addition **Calculation Date/Time:** 2024-09-15T20:11:20-07:00 **(Page 14 of 15)**

**Calculation Description:** Title 24 Analysis **Input File Name:** Title 24 - 40W Summit Dr.ribd22x

**HERS RATER VERIFICATION OF EXISTING CONDITIONS**

**WATER HEATING SYSTEMS - VERIFIED AND ALTERED**

| 01 | 02 | 03 | 04 |
|---|---|---|---|
| **Name** | **Name** | **Number of Heaters** | **Distribution Type** |
| DHW Sys 2 | Standard Distribution System | 1 | n/a |

**WATER HEATERS - VERIFIED AND ALTERED**

| 01 | 02 | 03 | 04 | 05 | 06 | 07 | 08 |
|---|---|---|---|---|---|---|---|
| **Name** | **Heater Element Type** | **Tank Type** | **Tank Volume (gal)** | **Energy Factor or Efficiency** | **Input Rating** | **Tank Exterior Insulation R-value** | **Standby Loss (Fraction)** |
| DHW Heater 2 | Natural Gas | Consumer Storage | 40 | 0.62 Water Heater Uniform Energy Factor | 75000 | 0 | n/a |



*NOTICE: This document has been generated by California Home Energy Efficiency Rating Services (CHEERS) using information uploaded by third parties not affiliated with or related to CHEERS. Therefore, CHEERS is not responsible for, and cannot guarantee, the accuracy or completeness of the information contained in this document.*



**CERTIFICATE OF COMPLIANCE - RESIDENTIAL PERFORMANCE COMPLIANCE METHOD** **CF1R-PRF-01-E**

**Project Name:** New Addition **Calculation Date/Time:** 2024-09-15T20:11:20-07:00 **(Page 15 of 15)**

**Calculation Description:** Title 24 Analysis **Input File Name:** Title 24 - 40W Summit Dr.ribd22x

**DOCUMENTATION AUTHOR'S DECLARATION STATEMENT**

1. I certify that this Certificate of Compliance documentation is accurate and complete.

| | |
|---|---|
| Documentation Author Name: Radik Musin | Documentation Author Signature: Radik Musin |
| Company: MECONE, Inc. | Signature Date: 09/15/2024 |
| Address: PO Box 1301 | CEA/ HERS Certification Identification (If applicable): RCN14284 |
| City/State/Zip: Murrieta, CA 92564 | Phone: 951-445-7213 |

**RESPONSIBLE PERSON'S DECLARATION STATEMENT**

I certify the following under penalty of perjury, under the laws of the State of California:

1. I am eligible under Division 3 of the Business and Professions Code to accept responsibility for the building design identified on this Certificate of Compliance.
2. I certify that the energy features and performance specifications identified on this Certificate of Compliance conform to the requirements of Title 24, Part 1 and Part 6 of the California Code of Regulations.
3. The building design features or system design features identified on this Certificate of Compliance are consistent with the information provided on other applicable compliance documents, worksheets, calculations, plans and specifications submitted to the enforcement agency for approval with this building permit application.

| | |
|---|---|
| Responsible Designer Name: Radik Musin | Responsible Designer Signature: Radik Musin |
| Company: MECONE, Inc. | Date Signed: 09/15/2024 |
| Address: PO Box 1301 | License: |
| City/State/Zip: Murrieta, CA 92564 | Phone: 951-445-7213 |

*Digitally signed by California Home Energy Efficiency Rating Services (CHEERS). This digital signature is provided in order to secure the content of this registered document, and in no way implies Registration Provider responsibility for the accuracy of the information.*



*NOTICE: This document has been generated by California Home Energy Efficiency Rating Services (CHEERS) using information uploaded by third parties not affiliated with or related to CHEERS. Therefore, CHEERS is not responsible for, and cannot guarantee, the accuracy or completeness of the information contained in this document.*



**CERTIFICATE OF VERIFICATION** **CF3R-EXC-20-H**

**Existing Conditions For Residential Alterations** **(Page 1 of 3)**

| | | | |
|---|---|---|---|
| **Project Name:** | New Addition | **CF1R-PRF Calculation Date/Time:** | 2024-09-15 20:11:20 |
| **CF1R-PRF Calculation Description:** | New Addition | **CF1R-PRF Input File Name:** | New Addition - AnalysisResults-BEES.xml |

**A. General Information**

| | | | | | |
|---|---|---|---|---|---|
| 01 | Project Name | New Addition | | | |
| 02 | Calculation Description | AdditionAlteration | | | |
| 03 | Project Location | 40 W Summit Dr | | | |
| 04 | CA City | Emerald Hills | 05 | Standards Version | Compliance 2019 |
| 06 | Zip code | 94062 | 07 | Software Version | EnergyPro 9.3 |
| 08 | Climate Zone | 3 | 09 | Front Orientation (deg/Cardinal) | 180 |
| 10 | Total Building Volume (ft3) | 20744 | 11 | Number of Dwelling Units | 1 |
| 12 | Project Scope | Addition and/or Alteration | 13 | Number of Bedrooms | 4 |
| 14 | New Conditioned Floor Area ($ft^2$) | 563 | 15 | Number of Stories in Building | 2 |
| 16 | Existing Conditioned Floor Area ($ft^2$) | 2030 | 17 | Fenestration Average U-factor | 0.31 |
| 18 | Total Conditioned Floor Area ($ft^2$) | 2593 | 19 | Glazing Percentage (%) | 16.5 |

**G. Water Heaters**

| 01 | 02 | 03 | 04 | 05 | 06 | 07 | 08 | 09 |
|---|---|---|---|---|---|---|---|---|
| Name | Heater Element Type | Tank Type | Tank Volume (gal) | Energy Factor or Efficiency | Input Rating | Tank Exterior Insulation R-value | Standby Loss Total (Fraction) | Verification |
| DHW Heater 2 | Natural Gas | Consumer Storage | 40 | 0.62 | 75000 | 0 | n/a | Pass |

| | | |
|---|---|---|
| 10 | Verification Status | Pass - all existing conditions have been verified |
| 11 | Correction Notes | |



*NOTICE: This document has been generated by California Home Energy Efficiency Rating Services (CHEERS) using information uploaded by third parties not affiliated with or related to CHEERS. Therefore, CHEERS is not responsible for, and cannot guarantee, the accuracy or completeness of the information contained in this document.*



PROJECT NUMBER:
-

PROJECT ADDRESS:
40 W SUMMIT DR,
EMERALD HILLS, CA 94062

DRAWN FOR:
BOB JOHNSTON
40 W SUMMIT DR, EMERALD HILLS, CA 94062

DRAWN BY:
SARRAH RESHAMWALA
XAR DESIGNS
2110 STANFORD AVE, MOUNTAIN VIEW CA 94040
sarrah.reshamwala@gmail.com

FOR OFFICE USE ONLY:

SCALE AT ARCH D:

| REV | DATE | ISSUE |
|---|---|---|
| | 09/12/2024 | |
| 1 | | |
| 2 | | |

TITLE 24 COMPLIANCE

**40 W SUMMIT DR.**
INTERIOR REMODEL & ADDITION

**T-03**

## EXISTING CONDITIONS FOR RESIDENTIAL ALTERATIONS

CALIFORNIA ENERGY COMMISSION

**CF3R-EXC-20-H**

**(Page 2 of 3)**

| H. Water Heating | | | | |
|---|---|---|---|---|
| 01 | 02 | 03 | 04 | 05 |
| Name | Distribution Type | Number of Heaters | Solar Fraction | Verification |
| DHW Sys 2 | Standard Distribution System | 1 | n/a | Pass |

| | | |
|---|---|---|
| 06 | Verification Status | Pass - all existing conditions have been verified |
| 07 | Correction Notes | |

**M. Determination of HERS Verification Compliance**
All applicable sections of this document shall indicate compliance with the specified verification protocol requirements in order for this Certificate of Verification as a whole to be determined to be in compliance.

| | |
|---|---|
| 01 | Complies: All specified verification protocol requirements on this document are met. |



## EXISTING CONDITIONS FOR RESIDENTIAL ALTERATIONS

CALIFORNIA ENERGY COMMISSION

**CF3R-EXC-20-H**

**(Page 3 of 3)**

| DOCUMENTATION AUTHOR'S DECLARATION STATEMENT | |
|---|---|
| 1. I certify that this Certificate of Verification documentation is accurate and complete. | |
| Documentation Author Name: Radik Musin | Documentation Author Signature: Radik Musin |
| Company: MECONE, Inc. | Date Signed: 2024-09-15 |
| Address: PO Box 1301 | CEA/ HERS Certification Identification (if applicable): RCN14284 |
| City/State/Zip: Murrieta CA 92564 | Phone: 951-445-7213 |

**RESPONSIBLE PERSON'S DECLARATION STATEMENT**

I certify the following under penalty of perjury, under the laws of the State of California:

1. information provided on this Certificate of Verification is true and correct.
2. I am the certified HERS Rater who performed the verification identified and reported on this Certificate of Verification (responsible rater).
3. I field inspected the existing building features, materials, components, manufactured devices, or system performance characteristics proposed for compliance credit for energy efficiency improvement identified on this Certificate of Verification and determined these existing building features, materials, components, manufactured devices, or system performance characteristics qualify for the proposed existing conditions compliance credit unless reported as not qualified in verification status and correction notes fields on this Certificate of Verification.
4. I understand that a registered copy of this Certificate of Verification shall be posted, or made available with the building permit(s) issued for the building, and made available to the enforcement agency for all applicable inspections, and I will take the necessary steps to ensure this requirement is accomplished.
5. I understand that a registered copy of this Certificate of Verification is required to be included with the documentation the builder provides to the building owner at occupancy, and I will take the necessary steps to ensure this requirement is accomplished.

| HERS RATER INFORMATION | |
|---|---|
| HERS Rater Company Name: MECONE, Inc. | |
| Responsible Rater Name: Radik Musin | Responsible Rater Signature: Radik Musin |
| Responsible Rater Certification Number w/ this HERS Provider: RCN14284 | Date Signed: 2024-09-15 |



## 2022 Single-Family Residential Mandatory Requirements Summary

*NOTE: Single-family residential buildings subject to the Energy Codes must comply with all applicable mandatory measures, regardless of the compliance approach used. Review the respective section for more information.*
(04/2022)

**Building Envelope:**

| | |
|---|---|
| § 110.6(a)1: | **Air Leakage.** Manufactured fenestration, exterior doors, and exterior pet doors must limit air leakage to 0.3 CFM per square foot or less when tested per NFRC-400, ASTM E283, or AAMA/WDMA/CSA 101/I.S.2/A440-2011. * |
| § 110.6(a)5: | **Labeling.** Fenestration products and exterior doors must have a label meeting the requirements of § 10-111(a). |
| § 110.6(b): | **Field fabricated exterior doors and fenestration** products must use U-factors and solar heat gain coefficient (SHGC) values from Tables 110.6-A, 110.6-B, or JA4.5 for exterior doors. They must be caulked and/or weather-stripped. * |
| § 110.7: | **Air Leakage.** All joints, penetrations, and other openings in the building envelope that are potential sources of air leakage must be caulked, gasketed, or weather stripped. |
| § 110.8(a): | **Insulation Certification by Manufacturers.** Insulation must be certified by the Department of Consumer Affairs, Bureau of Household Goods and Services (BHGS). |
| § 110.8(g): | **Insulation Requirements for Heated Slab Floors.** Heated slab floors must be insulated per the requirements of § 110.8(g). |
| § 110.8(i): | **Roofing Products Solar Reflectance and Thermal Emittance.** The thermal emittance and aged solar reflectance values of the roofing material must meet the requirements of § 110.8(i) and be labeled per §10-113 when the installation of a cool roof is specified on the CF1R. |
| § 110.8(j): | **Radiant Barrier.** When required, radiant barriers must have an emittance of 0.05 or less and be certified to the Department of Consumer Affairs. |
| § 150.0(a): | **Roof Deck, Ceiling and Rafter Roof Insulation.** Roof decks in newly constructed attics in climate zones 4 and 8-16 area-weighted average U-factor not exceeding U-0.184. Ceiling and rafter roofs minimum R-22 insulation in wood-frame ceiling; or area-weighted average U-factor must not exceed 0.043. Rafter roof alterations minimum R-19 or area-weighted average U-factor of 0.054 or less. Attic access doors must have permanently attached insulation using adhesive or mechanical fasteners. The attic access must be gasketed to prevent air leakage. Insulation must be installed in direct contact with a roof or ceiling which is sealed to limit infiltration and exfiltration as specified in § 110.7, including but not limited to placing insulation either above or below the roof deck or on top of a drywall ceiling. * |
| § 150.0(b): | **Loose-fill Insulation.** Loose fill insulation must meet the manufacturer's required density for the labeled R-value. |
| § 150.0(c): | **Wall Insulation.** Minimum R-13 insulation in 2x4 inch wood framing wall or have a U-factor of 0.102 or less, or R-20 in 2x6 inch wood framing or have a U-factor of 0.071 or less. Opaque non-framed assemblies must have an overall assembly U-factor not exceeding 0.102. Masonry walls must meet Tables 150.1-A or B. * |
| § 150.0(d): | **Raised-floor Insulation.** Minimum R-19 insulation in raised wood framed floor or 0.037 maximum U-factor. * |
| § 150.0(f): | **Slab Edge Insulation.** Slab edge insulation must meet all of the following: have a water absorption rate, for the insulation material alone without facings, no greater than 0.3 percent; have a water vapor permeance no greater than 2.0 perm per inch; be protected from physical damage and UV light deterioration; and, when installed as part of a heated slab floor, meet the requirements of § 110.8(g). |
| § 150.0(g)1: | **Vapor Retarder.** In climate zones 1 through 16, the earth floor of unvented crawl space must be covered with a Class I or Class II vapor retarder. This requirement also applies to controlled ventilation crawl space for buildings complying with the exception to §150.0(d). |
| § 150.0(g)2: | **Vapor Retarder.** In climate zones 14 and 16, a Class I or Class II vapor retarder must be installed on the conditioned space side of all insulation in all exterior walls, vented attics, and unvented attics with air-permeable insulation. |
| § 150.0(q): | **Fenestration Products.** Fenestration, including skylights, separating conditioned space from unconditioned space or outdoors must have a maximum U-factor of 0.45; or area-weighted average U-factor of all fenestration must not exceed 0.45. * |

**Fireplaces, Decorative Gas Appliances, and Gas Log:**

| | |
|---|---|
| § 110.5(e) | **Pilot Light.** Continuously burning pilot lights are not allowed for indoor and outdoor fireplaces. |
| § 150.0(e)1: | **Closable Doors.** Masonry or factory-built fireplaces must have a closable metal or glass door covering the entire opening of the firebox. |
| § 150.0(e)2: | **Combustion Intake.** Masonry or factory-built fireplaces must have a combustion outside air intake, which is at least six square inches in area and is equipped with a readily accessible, operable, and tight-fitting damper or combustion-air control device. * |
| § 150.0(e)3: | **Flue Damper.** Masonry or factory-built fireplaces must have a flue damper with a readily accessible control. * |

**Space Conditioning, Water Heating, and Plumbing System:**

| | |
|---|---|
| § 110.0-§ 110.3: | **Certification.** Heating, ventilation, and air conditioning (HVAC) equipment, water heaters, showerheads, faucets, and all other regulated appliances must be certified by the manufacturer to the California Energy Commission. * |
| § 110.2(a): | **HVAC Efficiency.** Equipment must meet the applicable efficiency requirements in Table 110.2-A through Table 110.2-N. * |
| § 110.2(b): | **Controls for Heat Pumps with Supplementary Electric Resistance Heaters.** Heat pumps with supplementary electric resistance heaters must have controls that prevent supplementary heater operation when the heating load can be met by the heat pump alone; and in which the cut-on temperature for compression heating is higher than the cut-on temperature for supplementary heating, and the cut-off temperature for compression heating is higher than the cut-off temperature for supplementary heating. * |
| § 110.2(c): | **Thermostats.** All heating or cooling systems not controlled by a central energy management control system (EMCS) must have a setback thermostat. * |
| § 110.3(c)3: | **Insulation.** Unfired service water heater storage tanks and solar water-heating backup tanks must have adequate insulation, or tank surface heat loss rating. |
| § 110.3(c)6: | **Isolation Valves.** Instantaneous water heaters with an input rating greater than 6.8 kBtu per hour (2 kW) must have isolation valves with hose bibbs or other fittings on both cold and hot water lines to allow for flushing the water heater when the valves are closed. |



## 2022 Single-Family Residential Mandatory Requirements Summary

| | |
|---|---|
| § 110.5: | **Pilot Lights.** Continuously burning pilot lights are prohibited for natural gas: fan-type central furnaces; household cooking appliances (except appliances without an electrical supply voltage connection with pilot lights that consume less than 150 Btu per hour ); and pool and spa heaters. * |
| § 150.0(h)1: | **Building Cooling and Heating Loads.** Heating and/or cooling loads are calculated in accordance with the ASHRAE Handbook, Equipment Volume, Applications Volume, and Fundamentals Volume; the SMACNA Residential Comfort System Installation Standards Manual; or the ACCA Manual J using design conditions specified in § 150.0(h)2. |
| § 150.0(h)3A: | **Clearances.** Air conditioner and heat pump outdoor condensing units must have a clearance of at least five feet from the outlet of any dryer. |
| § 150.0(h)3B: | **Liquid Line Drier.** Air conditioners and heat pump systems must be equipped with liquid line filter driers if required, as specified by the manufacturer's instructions. |
| § 150.0(j)1: | **Water Piping, Solar Water-heating System Piping, and Space Conditioning System Line Insulation.** All domestic hot water piping must be insulated as specified in § 609.11 of the California Plumbing Code. * |
| § 150.0(j)2: | **Insulation Protection.** Piping insulation must be protected from damage, including that due to sunlight, moisture, equipment` maintenance, and wind as required by §120.3(b). Insulation exposed to weather must be water retardant and protected from UV light (no adhesive tapes). Insulation covering chilled water piping and refrigerant suction piping located outside the conditioned space must include, or be protected by, a Class I or Class II vapor retarder. Pipe insulation buried below grade must be installed in a waterproof and non-crushable casing or sleeve. |
| § 150.0(n)1: | **Gas or Propane Water Heating Systems.** Systems using gas or propane water heaters to serve individual dwelling units must designate a space at least 2.5' x 2.5' x 7' suitable for the future installation of a heat pump water heater, and meet electrical and plumbing requirements, based on the distance between this designated space and the water heater location; and a condensate drain no more than 2" higher than the base of the water heater |
| § 150.0(n)3: | **Solar Water-heating Systems.** Solar water-heating systems and collectors must be certified and rated by the Solar Rating and Certification Corporation (SRCC), the International Association of Plumbing and Mechanical Officials, Research and Testing (IAPMO R&T), or by a listing agency that is approved by the executive director. |

**Ducts and Fans:**

| | |
|---|---|
| § 110.8(d)3: | **Ducts.** Insulation installed on an existing space-conditioning duct must comply with § 604.0 of the California Mechanical Code (CMC). If a contractor installs the insulation, the contractor must certify to the customer, in writing, that the insulation meets this requirement. |
| § 150.0(m)1: | **CMC Compliance.** All air-distribution system ducts and plenums must meet CMC §§ 601.0-605.0 and ANSI/SMACNA-006-2006 HVAC Duct Construction Standards Metal and Flexible 3rd Edition. Portions of supply-air and return-air ducts and plenums must be insulated to R-6.0 or higher; ducts located entirely in conditioned space as confirmed through field verification and diagnostic testing (RA3.1.4.3.8) do not require insulation. Connections of metal ducts and inner core of flexible ducts must be mechanically fastened. Openings must be sealed with mastic, tape, or other duct-closure system that meets the applicable UL requirements, or aerosol sealant that meets UL 723. The combination of mastic and either mesh or tape must be used to seal openings greater than ¼", If mastic or tape is used. Building cavities, air handler support platforms, and plenums designed or constructed with materials other than sealed sheet metal, duct board or flexible duct must not be used to convey conditioned air. Building cavities and support platforms may contain ducts; ducts installed in these spaces must not be compressed. * |
| § 150.0(m)2: | **Factory-Fabricated Duct Systems.** Factory-fabricated duct systems must comply with applicable requirements for duct construction, connections, and closures; joints and seams of duct systems and their components must not be sealed with cloth back rubber adhesive duct tapes unless such tape is used in combination with mastic and draw bands. |
| § 150.0(m)3: | **Field-Fabricated Duct Systems.** Field-fabricated duct systems must comply with applicable requirements for: pressure-sensitive tapes, mastics, sealants, and other requirements specified for duct construction. |
| § 150.0(m)7: | **Backdraft Damper.** Fan systems that exchange air between the conditioned space and outdoors must have backdraft or automatic dampers. |
| § 150.0(m)8: | **Gravity Ventilation Dampers.** Gravity ventilating systems serving conditioned space must have either automatic or readily accessible, manually operated dampers in all openings to the outside, except combustion inlet and outlet air openings and elevator shaft vents. |
| § 150.0(m)9: | **Protection of Insulation.** Insulation must be protected from damage due tosunlight, moisture, equipment maintenance, and wind. Insulation exposed to weather must be suitable for outdoor service (e.g., protected by aluminum, sheet metal, painted canvas, or plastic cover). Cellular foam insulation must be protected as above or painted with a water retardant and solar radiation-resistant coating. |
| § 150.0(m)10: | **Porous Inner Core Flex Duct.** Porous inner cores of flex ducts must have a non-porous layer or air barrier between the inner core and outer vapor barrier. |
| § 150.0(m)11: | **Duct System Sealing and Leakage Test.** When space conditioning systems use forced air duct systems to supply conditioned air to an occupiable space, the ducts must be sealed and duct leakage tested, as confirmed through field verification and diagnostic testing, in accordance with Reference Residential Appendix RA3.1. |
| § 150.0(m)12: | **Air Filtration.** Space conditioning systems with ducts exceeding 10 feet and the supply side of ventilation systems must have MERV 13 or equivalent filters. Filters for space conditioning systems must have a two inch depth or can be one inch if sized per Equation 150.0-A. Clean-filter pressure drop and labeling must meet the requirements in §150.0(m)12. Filters must be accessible for regular service. Filter racks or grilles must use gaskets, sealing, or other means to close gaps around the inserted filters to and prevents air from bypassing the filter. * |



## 2022 Single-Family Residential Mandatory Requirements Summary

| | |
|---|---|
| § 150.0(m)13: | **Space Conditioning System Airflow Rate and Fan Efficacy.** Space conditioning systems that use ducts to supply cooling must have a hole for the placement of a static pressure probe, or a permanently installed static pressure probe in the supply plenum. Airflow must be ≥ 350 CFM per ton of nominal cooling capacity, and an air-handling unit fan efficacy ≤ 0.45 watts per CFM for gas furnace air handlers and ≤ 0.58 watts per CFM for all others. Small duct high velocity systems must provide an airflow ≥ 250 CFM per ton of nominal cooling capacity, and an air-handling unit fan efficacy ≤ 0.62 watts per CFM. Field verification testing is required in accordance with Reference Residential Appendix RA3.3. * |

**Ventilation and Indoor Air Quality:**

| | |
|---|---|
| § 150.0(o)1: | **Requirements for Ventilation and Indoor Air Quality**. All dwelling units must meet the requirements of ASHRAE Standard 62.2, Ventilation and Acceptable Indoor Air Quality in Residential Buildings subject to the amendments specified in § 150.0(o)1. * |
| § 150.0(o)1B: | **Central Fan Integrated (CFI) Ventilation Systems.** Continuous operation of CFI air handlers is not allowed to provide the whole-dwelling unit ventilation airflow required per §150.0(o)1C. A motorized damper(s) must be installed on the ventilation duct(s) that prevents all airflow through the space conditioning duct system when the damper(s) is closed andcontrolled per §150.0(o)1Biii&iv. CFI ventilation systems must have controls that track outdoor air ventilation run time, and either open or close the motorized damper(s) for compliance with §150.0(o)1C. |
| § 150.0(o)1C: | **Whole-Dwelling Unit Mechanical Ventilation for Single-Family Detached and townhouses .** Single-family detached dwelling units, and attached dwelling units not sharing ceilings or floors with other dwelling units, occupiable spaces, public garages, or commercial spaces must have mechanical ventilation airflow specified in § 150.0(o)1Ci-iii. |
| § 150.0(o)1G: | **Local Mechanical Exhaust.** Kitchens and bathrooms must have local mechanical exhaust; nonenclosed kitchens must have demand-controlled exhaust system meeting requirements of §150.0(o)1Giii,enclosed kitchens and bathrooms can use demand-controlled or continuous exhaust meeting §150.0(o)1Giii-iv. Airflow must be measured by the installer per §150.0(o)1Gv, and rated for sound per §150.0(o)1Gvi. * |
| § 150.0(o)1H&I: | **Airflow Measurement and Sound Ratings of Whole-Dwelling Unit Ventilation Systems.** The airflow required per § 150.0(o)1C must be measured by using a flow hood, flow grid, or other airflow measuring device at the fan's inlet or outlet terminals/grilles per Reference Residential Appendix RA3.7. Whole-Dwelling unit ventilation systems must be rated for sound per ASHRAE 62.2 §7.2 at no less than the minimum airflow rate required by §150.0(o)1C. |
| § 150.0(o)2: | **Field Verification and Diagnostic Testing.** Whole-Dwelling Unit ventilation airflow, vented range hood airflow and sound rating, and HRV and ERV fan efficacy must be verified in accordance with Reference Residential Appendix RA3.7. Vented range hoods must be verified per Reference Residential Appendix RA3.7.4.3 to confirm if it is rated by HVI or AHAM to comply with the airflow rates and sound requirements per §150.0(o)1G |

**Pool and Spa Systems and Equipment:**

| | |
|---|---|
| § 110.4(a): | **Certification by Manufacturers.** Any pool or spa heating system or equipment must be certified to have all of the following: compliance with the Appliance Efficiency Regulations and listing in MAEDbS; an on-off switch mounted outside of the heater that allows shutting off the heater without adjusting the thermostat setting; a permanent weatherproof plate or card with operating instructions; and must not use electric resistance heating. * |
| § 110.4(b)1: | **Piping.** Any pool or spa heating system or equipment must be installed with at least 36 inches of pipe between the filter and the heater, or dedicated suction and return lines, or built-in or built-up connections to allow for future solar heating. |
| § 110.4(b)2: | **Covers.** Outdoor pools or spas that have a heat pump or gas heater must have a cover. |
| § 110.4(b)3: | **Directional Inlets and Time Switches for Pools.** Pools must have directional inlets that adequately mix the pool water, and a time switch that will allow all pumps to be set or programmed to run only during off-peak electric demand periods. |
| § 110.5: | **Pilot Light.** Natural gas pool and spa heaters must not have a continuously burning pilot light. |
| § 150.0(p): | **Pool Systems and Equipment Installation.** Residential pool systems or equipment must meet the specified requirements for pump sizing, flow rate, piping, filters, and valves. * |

**Lighting:**

| | |
|---|---|
| § 110.9: | **Lighting Controls and Components.** All lighting control devices and systems, ballasts, and luminaires must meet the applicable requirements of § 110.9. * |
| § 150.0(k)1A: | **Luminaire Efficacy.** All installed luminaires must meet the requirements in Table 150.0-A, except lighting integral to exhaust fans, kitchen range hoods, bath vanity mirrors, and garage door openers; navigation lighting less than 5 watts; and lighting internal to drawers, cabinets, and linen closets with an efficacy of at least 45 lumens per watt. |
| § 150.0(k)1B: | **Screw based luminaires.** Screw based luminaires must contain lamps that comply with Reference Joint Appendix JA8. * |
| § 150.0(k)1C: | **Recessed Downlight Luminaires in Ceilings.** Luminaires recessed into ceilings must not contain screw based sockets, must be airtight, and must be sealed with a gasket or caulk. California Electrical Code § 410.116 must also be met. |
| § 150.0(k)1D: | **Light Sources in Enclosed or Recessed Luminaires.** Lamps and other separable light sources that are not compliant with the JA8 elevated temperature requirements, including marking requirements, must not be installed in enclosed or recessed luminaires. |
| § 150.0(k)1E: | **Blank Electrical Boxes.** The number of electrical boxes that are more than five feet above the finished floor and do not contain a luminaire or other device shall be no more than the number of bedrooms. These boxes must be served by a dimmer, vacancy sensor control, low voltage wiring, or fan speed control. |
| § 150.0(k)1F: | **Lighting Integral to Exhaust Fans.** Lighting integral to exhaust fans (except when installed by the manufacturer in kitchen exhaust hoods) must meet the applicable requirements of § 150.0(k). * |



## 2022 Single-Family Residential Mandatory Requirements Summary

| | |
|---|---|
| § 150.0(k)1G: | **Screw based luminaires.** Screw based luminaires must contain lamps that comply with Reference Joint Appendix JA8. * |
| § 150.0(k)1H: | **Light Sources in Enclosed or Recessed Luminaires.** Lamps and other separable light sources that are not compliant with the JA8 elevated temperature requirements, including marking requirements, must not be installed in enclosed or recessed luminaires. |
| § 150.0(k)1I: | **Light Sources in Drawers, Cabinets, and Linen Closets.** Light sources internal to drawers, cabinetry or linen closets are not required to comply with Table 150.0-A or be controlled by vacancy sensors provided that they are rated to consume no more than 5 watts of power, emit no more than 150 lumens, and are equipped with controls that automatically turn the lighting off when the drawer, cabinet or linen closet is closed. |
| § 150.0(k)2A: | **Interior Switches and Controls.** All forward phase cut dimmers used with LED light sources must comply with NEMA SSL 7A. |
| § 150.0(k)2B: | **Interior Switches and Controls.** Exhaust fans must be controlled separately from lighting systems. * |
| § 150.0(k)2A: | **Accessible Controls.** Lighting must have readily accessible wall-mounted controls that allow the lighting to be manually turned on and off. * |
| § 150.0(k)2B: | **Multiple Controls.** Controls must not bypass a dimmer, occupant sensor, or vacancy sensor function if the dimmer or sensor is installed to comply with § 150.0(k). |
| § 150.0(k)2C: | **Mandatory Requirements.** Lighting controls must comply with the applicable requirements of § 110.9. |
| § 150.0(k)2D: | **Energy Management Control Systems.** An energy management control system (EMCS) may be used to comply with dimming, occupancy, and control requirements if it provides the functionality of the specified control per § 110.9 and the physical controls specified in § 150.0(k)2A. |
| § 150.0(k)2E: | **Automatic Shutoff Controls.** In bathrooms, garages, laundry rooms, utility rooms and walk-in closets, at least one installed luminaire must be controlled by an occupancy or vacancy sensor providing automatic-off functionality. Lighting inside drawers and cabinets with opaque fronts or doors must have controls that turn the light off when the drawer or door is closed. |
| § 150.0(k)2F: | **Dimmers.** Lighting in habitable spaces (e.g., living rooms, dining rooms, kitchens, and bedrooms) must have readily accessible wall-mounted dimming controls that allow the lighting to be manually adjusted up and down. Forward phase cut dimmers controlling LED light sources in these spaces must comply with NEMA SSL 7A. |
| § 150.0(k)2K: | **Independent controls.** Integrated lighting of exhaust fans shall be controlled independently from the fans. Lighting under cabinets or shelves, lighting in display cabinets, and switched outlets must be controlled separately from ceiling-installed lighting. |
| § 150.0(k)3A: | **Residential Outdoor Lighting.** For single-family residential buildings, outdoor lighting permanently mounted to a residential building, or to other buildings on the same lot, must have a manual on/off switch and either a photocell and motion sensor or automatic time switch control) or an astronomical time clock. An energy management control system that provides the specified control functionality and meets all applicable requirements may be used to meet these requirements. |
| § 150.0(k)4: | **Internally illuminated address signs.** Internally illuminated address signs must either comply with § 140.8 or consume no more than 5 watts of power. |
| § 150.0(k)5: | **Residential Garages for Eight or More Vehicles.** Lighting for residential parking garages for eight or more vehicles must comply with the applicable requirements for nonresidential garages in §§ 110.9, 130.0, 130.1, 130.4, 140.6, and 141.0. |

**Solar Readiness:**

| | |
|---|---|
| § 110.10(a)1: | **Single-family Residences.** Single-family residences located in subdivisions with 10 or more single-family residences and where the application for a tentative subdivision map for the residences has been deemed complete and approved by the enforcement agency, which do not have a photovoltaic system installed, must comply with the requirements of § 110.10(b)-(e). |
| §110.10(b)1A: | **Minimum Solar Zone Area.** The solar zone must have a minimum total area as described below. The solar zone must comply with access, pathway, smoke ventilation, and spacing requirements as specified in Title 24, Part 9 or other parts of Title 24 or in any requirements adopted by a local jurisdiction. The solar zone total area must be comprised of areas that have no dimension less than 5 feet and are no less than 80 square feet each for buildings with roof areas less than or equal to 10,000 square feet or no less than 160 square feet each for buildings with roof areas greater than 10,000 square feet. For single-family residences, the solar zone must be located on the roof or overhang of the building and have a total area no less than 250 square feet. * |
| § 110.10(b)2: | **Azimuth.** All sections of the solar zone located on steep-sloped roofs must have an azimuth between 90-300° of true north. |
| § 110.10(b)3A: | **Shading.** The solar zone must not contain any obstructions, including but not limited to: vents, chimneys, architectural features, and roof mounted equipment. * |
| § 110.10(b)3B: | **Shading.** Any obstruction located on the roof or any other part of the building that projects above a solar zone must be located at least twice the horizontal distance of the height difference between the highest point of the obstruction and the horizontal projection of the nearest point of the solar zone, measured in the vertical plane. * |
| § 110.10(b)4: | **Structural Design Loads on Construction Documents.** For areas of the roof designated as a solar zone, the structural design loads for roof dead load and roof live load must be clearly indicated on the construction documents. |
| § 110.10(c): | **Interconnection Pathways.** The construction documents must indicate: a location reserved for inverters and metering equipment and a pathway reserved for routing of conduit from the solar zone to the point of interconnection with the electrical service; and for single-family residences and central water-heating systems, a pathway reserved for routing plumbing from the solar zone to the water-heating system. |
| § 110.10(d): | **Documentation.** A copy of the construction documents or a comparable document indicating the information from § 110.10(b)-(c) must be provided to the occupant. |
| § 110.10(e)1: | **Main Electrical Service Panel.** The main electrical service panel must have a minimum busbar rating of 200 amps. |
| § 110.10(e)2: | **Main Electrical Service Panel.** The main electrical service panel must have a reserved space to allow for the installation of a double pole circuit breaker for a future solar electric installation. The reserved space must be permanently marked as "For Future Solar Electric." |

**Electric and Energy Storage Ready:**



## 2022 Single-Family Residential Mandatory Requirements Summary

| | |
|---|---|
| § 150.0(s) | **Energy Storage System (ESS) Ready.** All single-family residences must meet all of the following: Either ESS-ready interconnection equipment with backed up capacity of 60 amps or more and four or more ESS supplied branch circuits, *or* a dedicated raceway from the main service to a subpanel that supplies the branch circuits in § 150.0(s); at least four branch circuits must be identified and have their source collocated at a single panelboard suitable to be supplied by the ESS, with one circuit supplying the refrigerator, one lighting circuit near the primary exit, and one circuit supplying a sleeping room receptacle outlet; main panelboard must have a minimum busbar rating of 225 amps; sufficient space must be reserved to allow future installation of a system isolation equipment/transfer switch within 3' of the main panelboard, with raceways installed between the panelboard and the switch location to allow the connection of backup power source. |
| § 150.0(t) | **Heat Pump Space Heater Ready.** Systems using gas or propane furnaces to serve individual dwelling units must include: A dedicated unobstructed 240V branch circuit wiring installed within 3' of the furnace with circuit conductors rated at least 30 amps with the blank cover identified as "240V ready;" and a reserved main electrical service panel space to allow for the installation of a double pole circuit breaker permanently marked as "For Future 240V use." |
| § 150.0(u) | **Electric Cooktop Ready.** Systems using gas or propane cooktop to serve individual dwelling units must include: A dedicated unobstructed 240V branch circuit wiring installed within 3' of the cooktop with circuit conductors rated at least 50 amps with the blank cover identified as "240V ready;" and a reserved main electrical service panel space to allow for the installation of a double pole circuit breaker permanently marked as "For Future 240V use." |
| § 150.0(v) | **Electric Clothes Dryer Ready.** Clothes dryer locations with gas or propane plumbing to serve individual dwelling units must include: A dedicated unobstructed 240V branch circuit wiring installed within 3' of the dryer location with circuit conductors rated at least 30 amps with the blank cover identified as "240V ready;" and a reserved main electrical service panel space to allow for the installation of a double pole circuit breaker permanently marked as "For Future 240V use." |

*Exceptions may apply.



PROJECT NUMBER:
-

PROJECT ADDRESS:
40 W SUMMIT DR,
EMERALD HILLS, CA 94062

DRAWN FOR:
BOB JOHNSTON
40 W SUMMIT DR, EMERALD HILLS, CA 94062

DRAWN BY:
SARRAH RESHAMWALA
XAR DESIGNS
2110 STANFORD AVE. MOUNTAIN VIEW CA 94040
sarrah.reshamwala@gmail.com
Sarrah Reshamwala

FOR OFFICE USE ONLY:

SCALE AT ARCH D:

| REV | DATE | ISSUE |
|---|---|---|
| | 09/12/2024 | |
| 1 | | |
| 2 | | |

# TITLE 24 COMPLIANCE

**40 W SUMMIT DR.**
INTERIOR REMODEL & ADDITION

# T-04

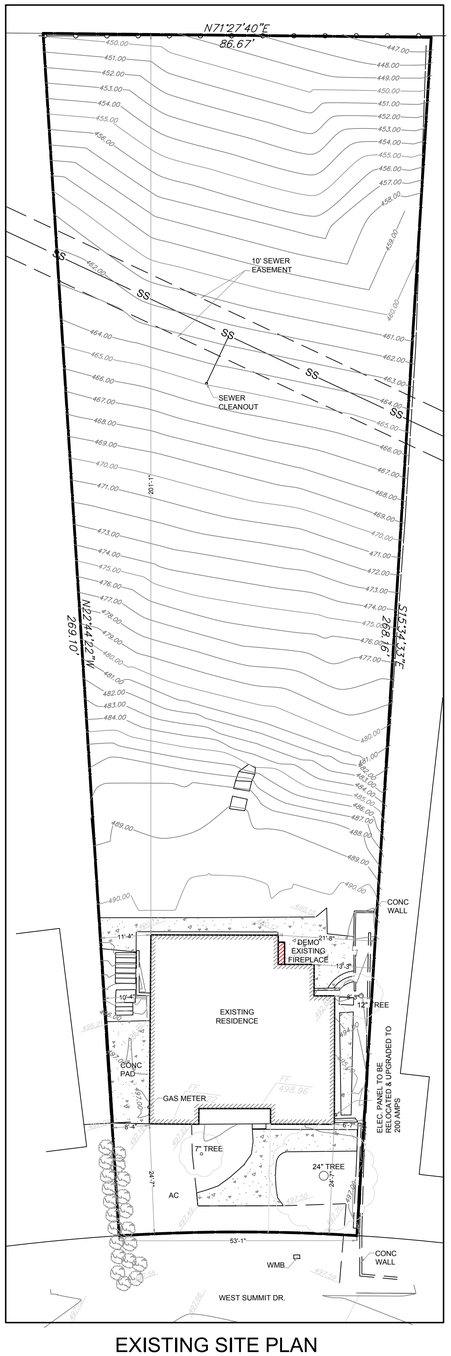


EXISTING SITE PLAN

$\frac{1}{16}$"=1'0"@ARCH D

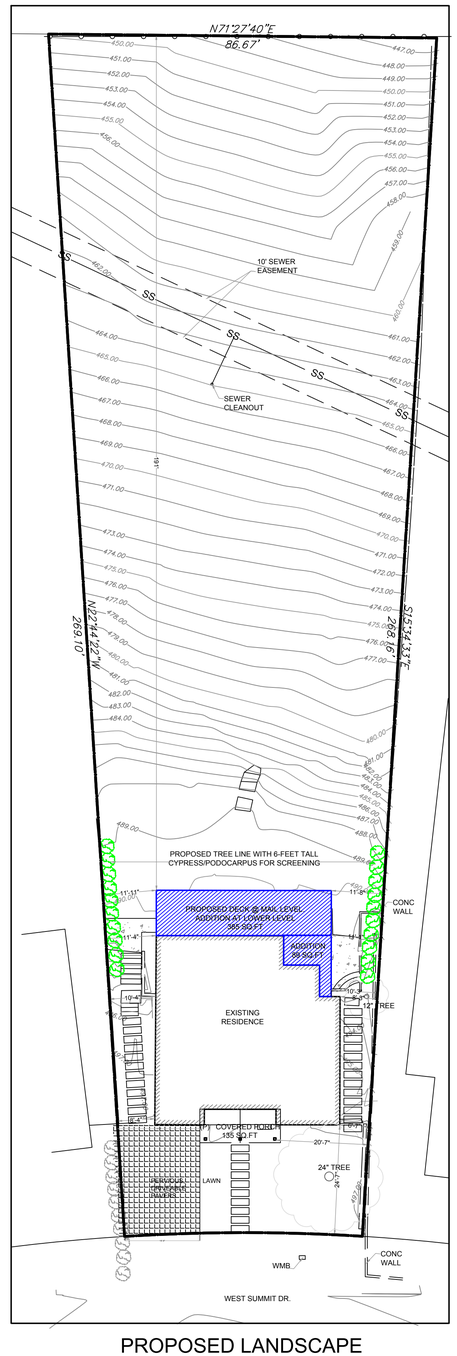


PROPOSED LANDSCAPE

$\frac{1}{16}$"=1'0"@ARCH D

## NOTES

1. A MINIMUM THREE-INCH (3") LAYER OF MULCH SHALL BE APPLIED ON ALL EXPOSED SOIL SURFACES OF PLANTING AREAS EXCEPT IN TURFGRASS AREAS, CREEPING OR ROOTING GROUNDCOVERS, OR DIRECT SEEDING APPLICATIONS WHERE MULCH IS CONTRAINDICATED.
2. AT THE TIME OF FINAL INSPECTION, THE PERMIT APPLICANT MUST PROVIDE THE OWNER OF THE PROPERTY AND THE LOCAL AGENCY WITH A CERTIFICATE OF COMPLETION, CERTIFICATE OF INSTALLATION, IRRIGATION SCHEDULE OF LANDSCAPE AND IRRIGATION MAINTENANCE.
3. UNLESS CONTRADICTED BY A SOILS TEST, COMPOST AT A RATE OF MINIMUM OF FOUR CUBIC YARDS PER 1000 SQUARE FEET OF PERMEABLE AREA SHALL BE INCORPORATED TO A DEPTH OF SIX INCHES INTO THE SOIL.

PROJECT NUMBER:
-

PROJECT ADDRESS:
40 W SUMMIT DR,
EMERALD HILLS, CA 94062

DRAWN FOR:
BOB JOHNSTON
40 W SUMMIT DR, EMERALD HILLS, CA 94062

DRAWN BY:
SARRAH RESHAMWALA

XAR DESIGNS
2110 STANFORD AVE, MOUNTAIN VIEW CA 94040
sarrah.reshamwala@gmail.com

FOR OFFICE USE ONLY:

SCALE AT ARCH D:

| REV | DATE | ISSUE |
|---|---|---|
| | 09/12/2024 | |
| 1 | | |
| 2 | | |

# LANDSCAPE PLAN

**40 W SUMMIT DR.**
INTERIOR REMODEL & ADDITION

**L-01**

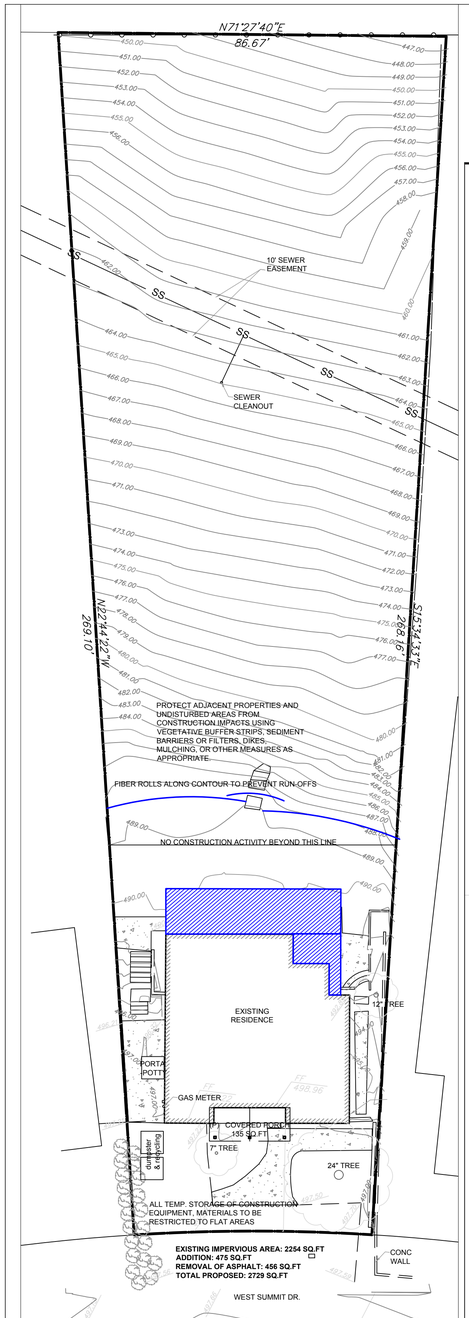


## EROSION, SEDIMENT CONTROL PLAN

$\frac{1}{16}$"=1'0"@ARCH D

**EXISTING IMPERVIOUS AREA: 2254 SQ.FT**
**ADDITION: 475 SQ.FT**
**REMOVAL OF ASPHALT DRIVEWAY: 456 SQ.FT**
**TOTAL PROPOSED: 2273 SQ.FT**

### 7 Geotextiles and Mats

**CASQA Detail EC-7**

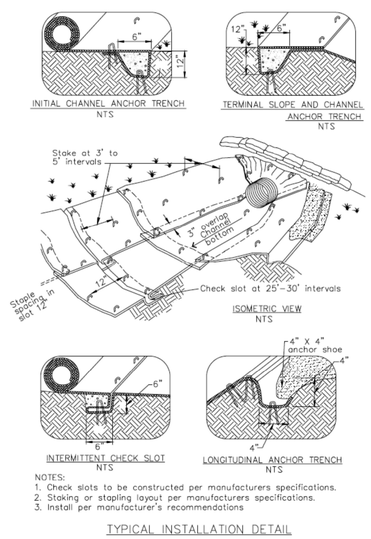


NOTES:
1. Check slots to be constructed per manufacturers specifications.
2. Staking or stapling layout per manufacturers specifications.
3. Install per manufacturer's recommendations

TYPICAL INSTALLATION DETAIL

### 5 Geotextiles and Mats

**CASQA Detail EC-7**

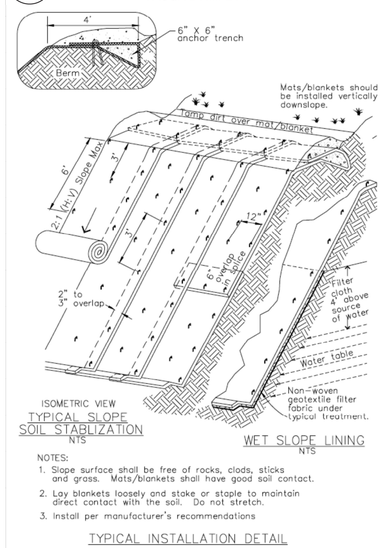


NOTES:
1. Slope surface shall be free of rocks, clods, sticks and grass. Mats/blankets shall have good soil contact.
2. Lay blankets loosely and stake or staple to maintain direct contact with the soil. Do not stretch.
3. Install per manufacturer's recommendations

TYPICAL INSTALLATION DETAIL

### 3 Entrance/Outlet Tire Wash

**CASQA Detail TC-3**

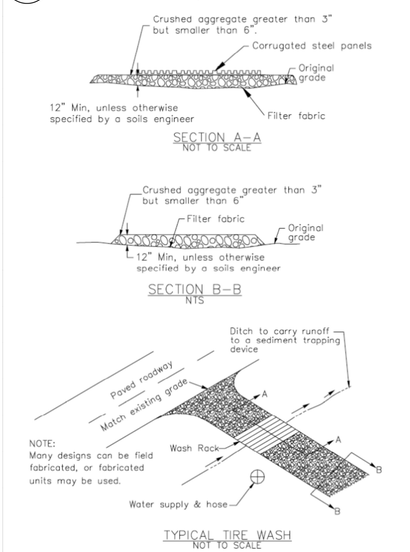


### 1 Fiber Rolls

**CASQA Detail SE-5**

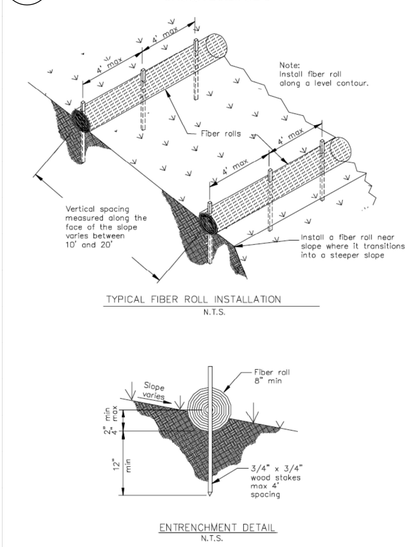


### 8 Storm Drain Inlet Protection

**CASQA Detail SE-10**

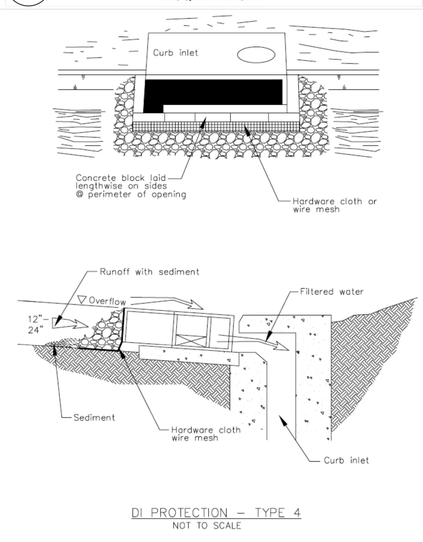


DI PROTECTION – TYPE 4
NOT TO SCALE

### 6 Storm Drain Inlet Protection

**CASQA Detail SE-10**

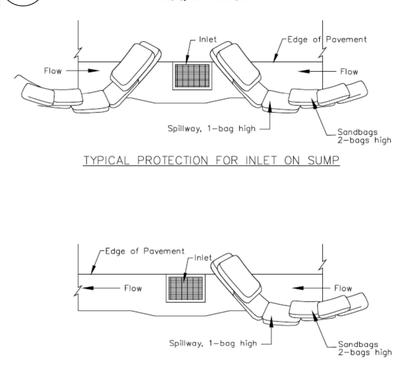


NOTES:
1. Intended for short-term use.
2. Use to inhibit non-storm water flow.
3. Allow for proper maintenance and cleanup.
4. Bags must be removed after adjacent operation is completed
5. Not applicable in areas with high silts and clays without filter fabric.

DI PROTECTION TYPE 3
NOT TO SCALE

### 4 Storm Drain Inlet Protection

**CASQA Detail SE-10**

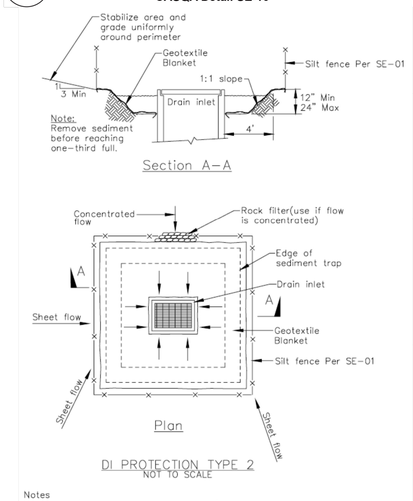


Notes
1. For use in cleared and grubbed and in graded areas.
2. Shape basin so that longest inflow area faces longest length of trap.
3. For concentrated flows, shape basin in 2:1 ratio with length oriented towards direction of flow.

### 2 Concrete Waste Management

**CASQA Detail WM-8**

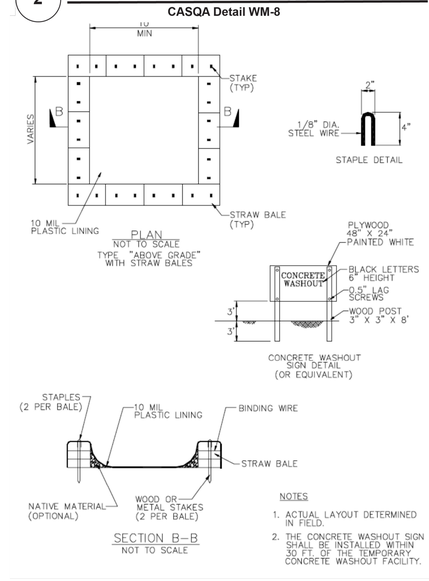


NOTES
1. ACTUAL LAYOUT DETERMINED IN FIELD.
2. THE CONCRETE WASHOUT SIGN SHALL BE INSTALLED WITHIN 30 FT. OF THE TEMPORARY CONCRETE WASHOUT FACILITY.

Source for Graphics: California Stormwater BMP Handbook, California Stormwater Quality Association, January 2003.
Available from www.cabmphandbooks.com.

PROJECT NUMBER:
-

PROJECT ADDRESS:
40 W SUMMIT DR,
EMERALD HILLS, CA 94062

DRAWN FOR:
BOB JOHNSTON
40 W SUMMIT DR, EMERALD HILLS, CA 94062

DRAWN BY:
SARRAH RESHAMWALA
XAR DESIGNS
2110 STANFORD AVE, MOUNTAIN VIEW CA 94040
sarrah.reshamwala@gmail.com

FOR OFFICE USE ONLY:

SCALE AT ARCH D:

| REV | DATE | ISSUE |
|---|---|---|
| 1 | 09/12/2024 | |
| 2 | | |

# EROSION CONTROL

**40 W SUMMIT DR.**
INTERIOR REMODEL & ADDITION

# C-01

## 3 Stabilized Construction Entrance/Exit

**CASQA Detail TC-1**

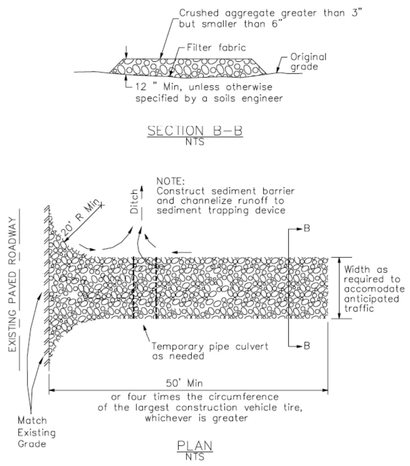


## 1 Silt Fence

**CASQA Detail SE-1**

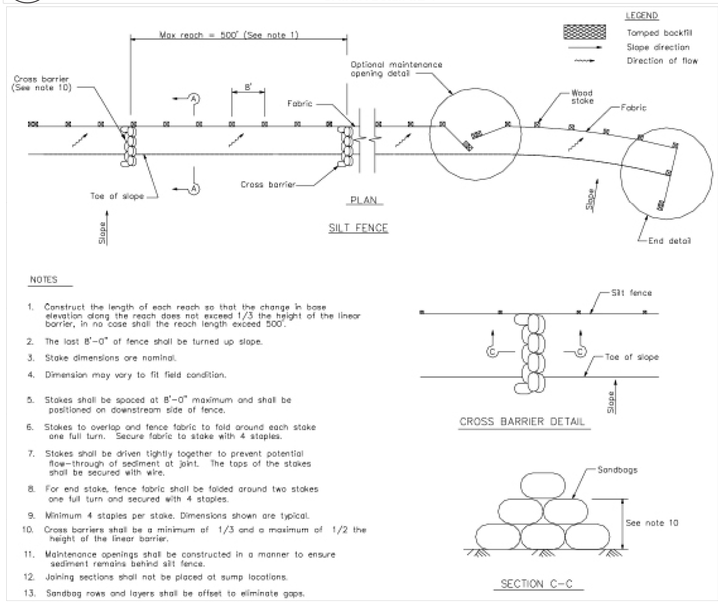


## 4 Velocity Dissipation Devices

**CASQA Detail EC-10**

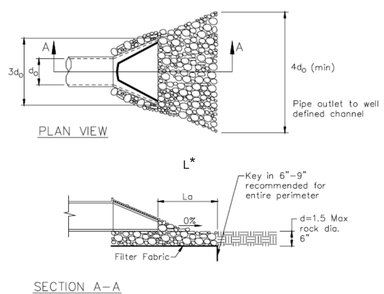


* Length per ABAG Design Standards

## 2 Silt Fence

**CASQA Detail SE-1**

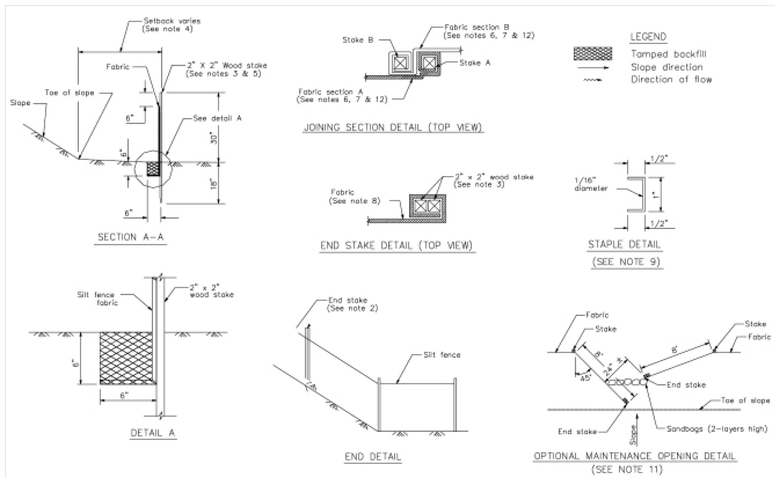


Source for Graphics: California Stormwater BMP Handbook, California Stormwater Quality Association, January 2003.
Available from www.cabmphandbooks.com.

### STANDARD BEST MANAGEMENT PRACTICE NOTES

1. Solid and Demolition Waste Management: Provide designated waste collection areas and containers on site away from streets, gutters, storm drains, and waterways, and arrange for regular disposal. Waste containers must be watertight and covered at all times except when waste is deposited. Refer to Erosion & Sediment Control Field Manual, 4th Edition (page C3) or latest.
2. Hazardous Waste Management: Provide proper handling and disposal of hazardous wastes by a licensed hazardous waste material hauler. Hazardous wastes shall be stored and properly labeled in sealed containers constructed of suitable materials. Refer to Erosion & Sediment Control Field Manual, 4th Edition (pages C-5 to C-6) or latest.
3. Spill Prevention and Control: Provide proper storage areas for liquid and solid materials, including chemicals and hazardous substances, away from streets, gutters, storm drains, and waterways. Spill control materials must be kept on site where readily accessible. Spills must be cleaned up immediately and contaminated soil disposed properly. Refer to Erosion & Sediment Control Field Manual, 4th Edition (pages C-7 to C-8, C-13 to C-14) or latest.
4. Vehicle and Construction Equipment Service and Storage: An area shall be designated for the maintenance, where on-site maintenance is required, and storage of equipment that is protected from stormwater run-on and runoff. Measures shall be provided to capture any waste oils, lubricants, or other potential pollutants and these wastes shall be properly disposed of off site. Fueling and major maintenance/repair, and washing shall be conducted off-site whenever feasible. Refer to Erosion & Sediment Control Field Manual, 4th Edition (page C9) or latest.
5. Material Delivery, Handling and Storage: In general, materials should not be stockpiled on site. Where temporary stockpiles are necessary and approved by the County, they shall be covered with secured plastic sheeting or tarp and located in designated areas near construction entrances and away from drainage paths and waterways. Barriers shall be provided around storage areas where materials are potentially in contact with runoff. Refer to Erosion & Sediment Control Field Manual, 4th Edition (pages C-11 to C-12) or latest.
6. Handling and Disposal of Concrete and Cement: When concrete trucks and equipment are washed on-site, concrete wastewater shall be contained in designated containers or in a temporary lined and watertight pit where wasted concrete can harden for later removal. If possible have concrete contractor remove concrete wash water from site. In no case shall fresh concrete be washed into the road right-of-way. Refer to Erosion & Sediment Control Field Manual, 4th Edition (pages C-15 to C-16) or latest.
7. Pavement Construction Management: Prevent or reduce the discharge of pollutants from paving operations, using measures to prevent run-on and runoff pollution and properly disposing of wastes. Avoid paving in the wet season and reschedule paving when rain is in the forecast. Residue from saw-cutting shall be vacuumed for proper disposal. Refer to Erosion & Sediment Control Field Manual, 4th Edition (pages C-17 to C-18) or latest.
8. Contaminated Soil and Water Management: Inspections to identify contaminated soils should occur prior to construction and at regular intervals during construction. Remediating contaminated soil should occur promptly after identification and be specific to the contaminant identified, which may include hazardous waste removal. Refer to Erosion & Sediment Control Field Manual, 4th Edition (pages C-19 to C-20) or latest.
9. Sanitary/Septic Water Management: Temporary sanitary facilities should be located away from drainage paths, waterways, and traffic areas. Only licensed sanitary and septic waste haulers should be used. Secondary containment should be provided for all sanitary facilities. Refer to Erosion & Sediment Control Field Manual, 4th Edition (page C-21) or latest.
10. Inspection & Maintenance: Areas of material and equipment storage sites and temporary sanitary facilities must be inspected weekly. Problem areas shall be identified and appropriate additional and/or alternative control measures implemented immediately, within 24 hours of the problem being identified.

### STANDARD EROSION CONTROL NOTES

1. Sediment Control Management:

   Tracking Prevention & Clean Up: Activities shall be organized and measures taken as needed to prevent or minimize tracking of soil onto the public street system. A gravel or proprietary device construction entrance/exit is required for all sites. Clean up of tracked material shall be provided by means of a street sweeper prior to an approaching rain event, or at least once at the end of each workday that material is tracked, or, more frequently as determined by the County Inspector. Refer to Erosion & Sediment Control Field Manual, 4th Edition (pages B-31 to B-33) or latest.

   Storm Drain Inlet and Catch Basin Inlet Protection: All inlets within the vicinity of the project and within the project limits shall be protected with gravel bags placed around inlets or other inlet protection. At locations where exposed soils are present, staked fiber roles or staked silt fences can be used. Inlet filters are not allowed due to clogging and subsequent flooding. Refer to Erosion & Sediment Control Field Manual, 4th Edition (pages B-49 to B-51) or latest.

   Storm Water Runoff: No storm water runoff shall be allowed to drain in to the existing and/or proposed underground storm drain system or other above ground watercourses until appropriate erosion control measures are fully installed.

   Dust Control: The contractor shall provide dust control in graded areas as required by providing wet suppression or chemical stabilization of exposed soils, providing for rapid clean up of sediments deposited on paved roads, furnishing construction road entrances and vehicle wash down areas, and limiting the amount of areas disturbed by clearing and earth moving operations by scheduling these activities in phases.

   Stockpiling: Excavated soils shall not be placed in streets or on paved areas. Borrow and temporary stockpiles shall be protected with appropriate erosion control measures(tarps, straw bales, silt fences, ect.) to ensure silt does not leave the site or enter the storm drain system or neighboring watercourse.
2. Erosion Control: During the rainy season, all disturbed areas must include an effective combination of erosion and sediment control. It is required that temporary erosion control measures are applied to all disturbed soil areas prior to a rain event. During the non-rainy season, erosion control measures must be applied sufficient to control wind erosion at the site.
3. Inspection & Maintenance: Disturbed areas of the Project's site, locations where vehicles enter or exit the site, and all erosion and sediment controls that are identified as part of the Erosion Control Plans must be inspected by the Contractor before, during, and after storm events, and at least weekly during seasonal wet periods. Problem areas shall be identified and appropriate additional and/ or alternative control measures implemented immediately, within 24 hours of the problem being identified.
4. Project Completion: Prior to project completion and signoff by the County Inspector, all disturbed areas shall be reseeded, planted, or landscaped to minimize the potential for erosion on the subject site.
5. It shall be the Owner's/Contractor's responsibility to maintain control of the entire construction operation and to keep the entire site in compliance with the erosion control plan.
6. Erosion and sediment control best management practices shall be operable year round or until vegetation is fully established on landscaped surfaces.

Project Information

PROJECT NUMBER:
-

PROJECT ADDRESS:
40 W SUMMIT DR,
EMERALD HILLS, CA 94062

DRAWN FOR:
BOB JOHNSTON
40 W SUMMIT DR, EMERALD HILLS, CA 94062

DRAWN BY:
SARRAH RESHAMWALA
XAR DESIGNS
2110 STANFORD AVE, MOUNTAIN VIEW CA 94040
sarrah.reshamwala@gmail.com

FOR OFFICE USE ONLY:

SCALE AT ARCH D:

| REV | DATE | ISSUE |
|---|---|---|
| | 09/12/2024 | |
| 1 | | |
| 2 | | |

EROSION CONTROL

**40 W SUMMIT DR.**
INTERIOR REMODEL & ADDITION

**C-02**

Best Management Practices and Erosion Control Details Sheet 1
County of Santa Clara

BMP-1

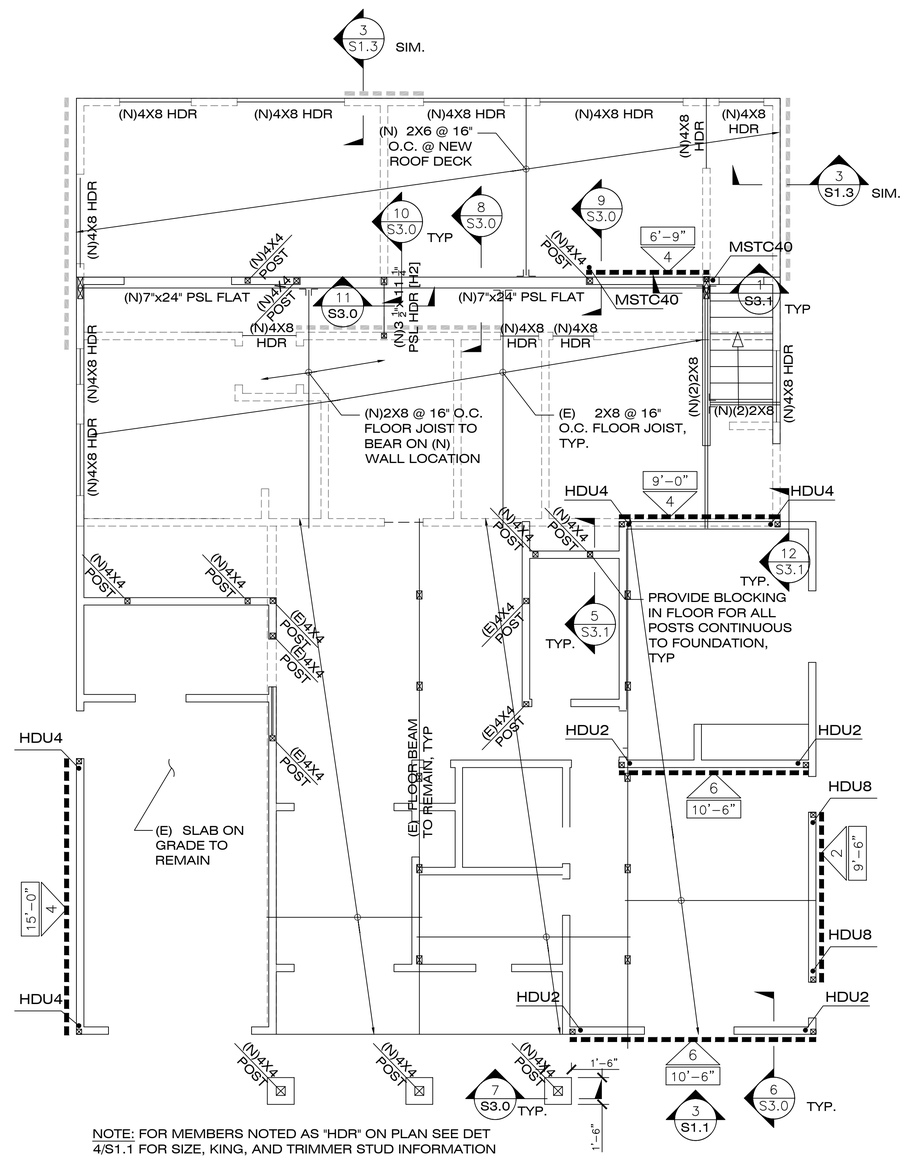


NOTE: FOR MEMBERS NOTED AS "HDR" ON PLAN SEE DET 4/S1.1 FOR SIZE, KING, AND TRIMMER STUD INFORMATION

1 / - MAIN LEVEL FRAMING PLAN

SCALE: 1/4" = 1'-0"

## LEGEND

| | |
|---|---|
| *'-**" / # | "*'-**" DENOTES SHEAR WALL LENGTH, AND "#" DENOTES EDGE NAILING SPACING AND SHEAR WALL TYPE. SEE TYPICAL DETAILS ON S1.0 FOR SHEAR WALL SCHEDULE. |
| #### | SHEAR WALL HOLDOWN, #### DENOTES HOLDOWN TYPE. SEE TYPICAL DETAILS ON S1.0 FOR INFO AND MIN. END POST SIZE |
| #### SHARED | SHAREDSHEAR WALL HOLDOWN, #### DENOTES HOLDOWN TYPE. BOTH ORTHOGONAL WALLS SHALL BE NAILED TO THE SAME END POST WITH ONE HOLDOWN PER PLAN. SEE TYPICAL DETAILS ON S1.0 FOR INFO AND MIN. END POST SIZE |
| | (N) CONCRETE FOUNDAITON |


WINGERT ENGINEERING
Residential Design Services

LAUREN WINGERT
5049 SUTHERLAND DR
CONCORD, CA 94521

T. 925.330.3731

lauren@wingertengineering.com


REGISTERED PROFESSIONAL ENGINEER LAUREN M WINGERT C 80032 CIVIL STATE OF CALIFORNIA

# SUMMIT REMODEL & ADDITION

40 W SUMMIT
EMERALD HILLS, CA

| Rev# | Date | By | Issue |
|---|---|---|---|
| | 10/22/2024 | LW | PERMIT SET |
| ⚠ | | | |
| | | | |
| | | | |

UPPER FLOOR & LOW ROOF FRAMING PLAN

S2.1

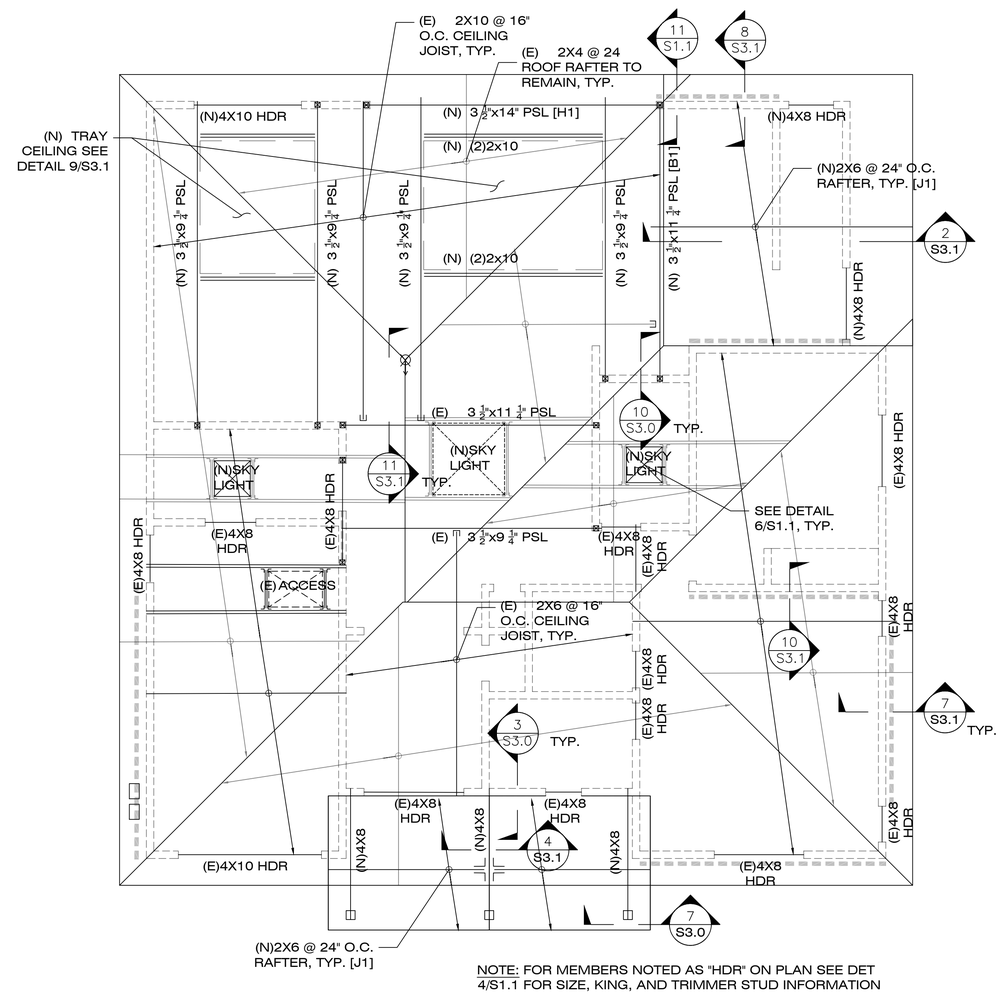


NOTE: FOR MEMBERS NOTED AS "HDR" ON PLAN SEE DET 4/S1.1 FOR SIZE, KING, AND TRIMMER STUD INFORMATION

## 1 ROOF FRAMING PLAN

SCALE: 1/4" = 1'-0"

## LEGEND

| | |
|---|---|
| *'–**" / # | "*'–**" DENOTES SHEAR WALL LENGTH, AND "#" DENOTES EDGE NAILING SPACING AND SHEAR WALL TYPE. SEE TYPICAL DETAILS ON S1.0 FOR SHEAR WALL SCHEDULE. |
| #### | SHEAR WALL HOLDOWN, #### DENOTES HOLDOWN TYPE. SEE TYPICAL DETAILS ON S1.0 FOR INFO AND MIN. END POST SIZE |
| #### SHARED | SHAREDSHEAR WALL HOLDOWN, #### DENOTES HOLDOWN TYPE. BOTH ORTHOGONAL WALLS SHALL BE NAILED TO THE SAME END POST WITH ONE HOLDOWN PER PLAN. SEE TYPICAL DETAILS ON S1.0 FOR INFO AND MIN. END POST SIZE |
| | (N) CONCRETE FOUNDAITON |


WINGERT ENGINEERING
Residential Design Services

LAUREN WINGERT
5049 SUTHERLAND DR
CONCORD, CA 94521

T. 925.330.3731

lauren@wingertengineering.com


REGISTERED PROFESSIONAL ENGINEER LAUREN M WINGERT C 80032 CIVIL STATE OF CALIFORNIA

# SUMMIT REMODEL & ADDITION

40 W SUMMIT
EMERALD HILLS, CA

| Rev# | Date | By | Issue |
|---|---|---|---|
| | 10/22/2024 | LW | PERMIT SET |
| ⚠ | | | |
| | | | |
| | | | |

HIGH ROOF FRAMING PLAN

S2.2

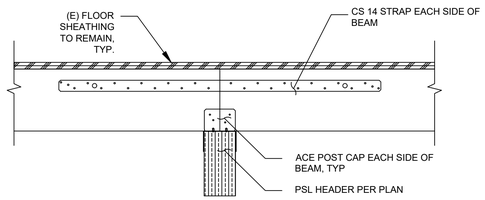


11 DETAIL
SCALE: 1-1/2"=1'-0"

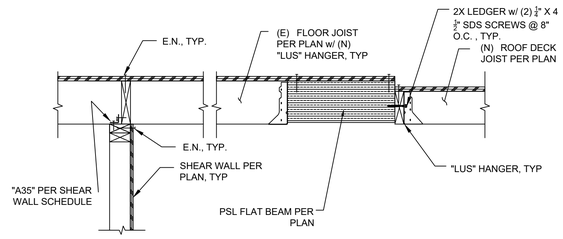


8 DETAIL
SCALE: 1"=1'-0"

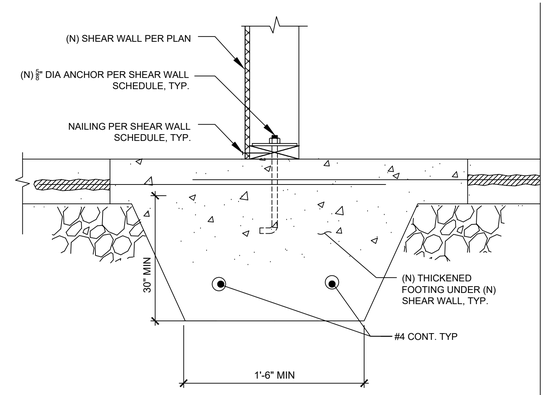


3 (N) SHEAR WALL TO (E) SLAB
SCALE: 1-1/2"=1'-0"

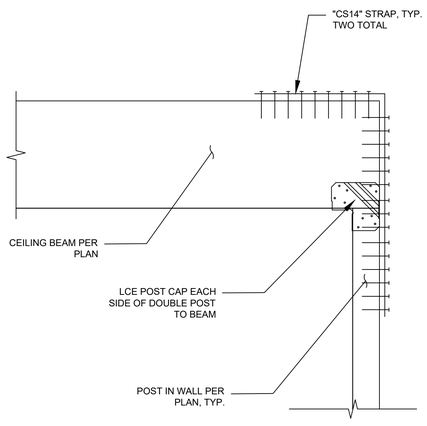


10 DETAIL
SCALE: 1-1/2"=1'-0"

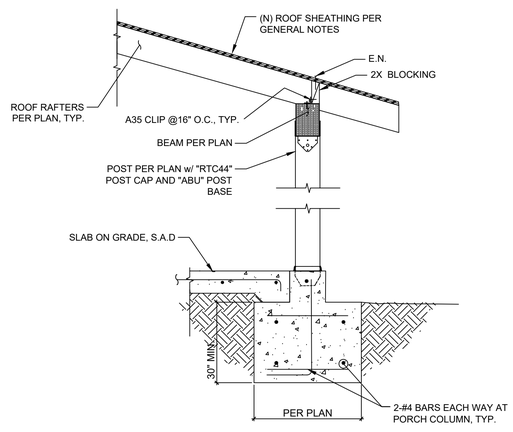


7 PORCH DETAIL
SCALE: 3/4"=1'-0"

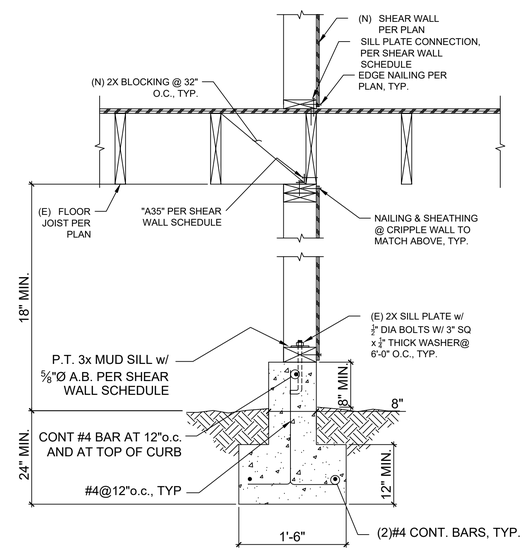


5 DETAIL
SCALE: 1"=1'-0"

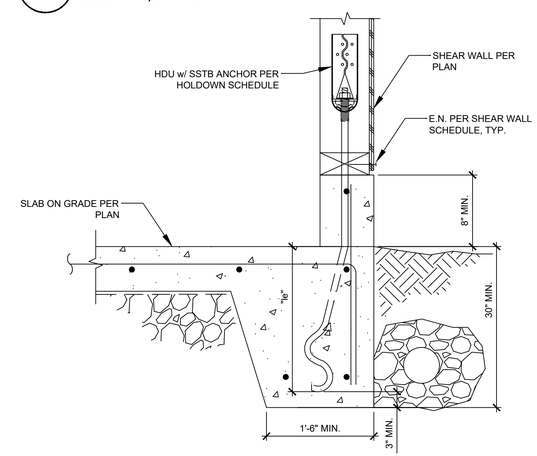


2 DETAIL
SCALE: 1-1/2"=1'-0"

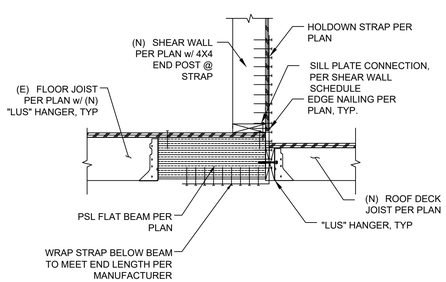


9 DETAIL
SCALE: 1"=1'-0"

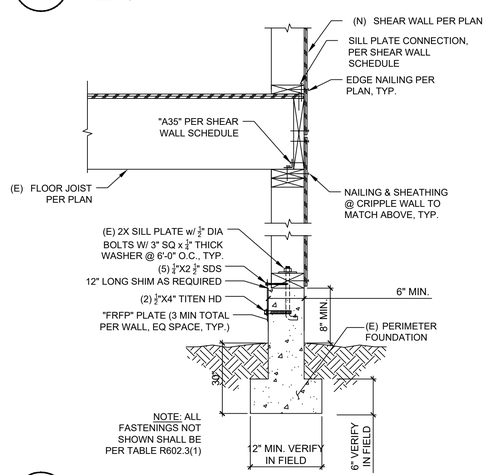


6 DETAIL
SCALE: 1"=1'-0"

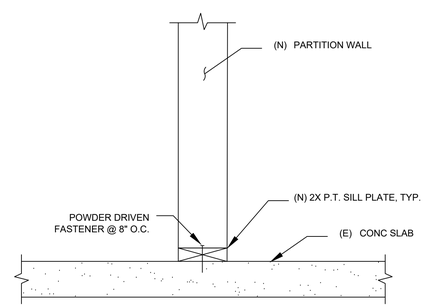


4 PARTITION WALL SILL PLATE DETAIL
SCALE: 1-1/2"=1'-0"

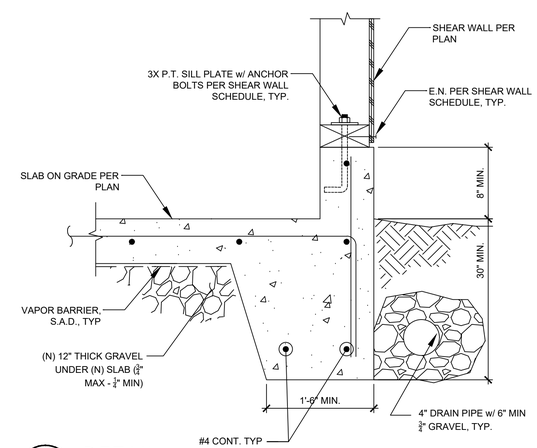


1 DETAIL
SCALE: 1-1/2"=1'-0"


WINGERT ENGINEERING
Residential Design Services

LAUREN WINGERT
5049 SUTHERLAND DR
CONCORD, CA 94521

T. 925.330.3731

lauren@wingertengineering.com


REGISTERED PROFESSIONAL ENGINEER
LAUREN M WINGERT
C 80032
CIVIL
STATE OF CALIFORNIA

# SUMMIT REMODEL & ADDITION

40 W SUMMIT
EMERALD HILLS, CA

| Rev# | Date | By | Issue |
|---|---|---|---|
| | 10/22/2024 | LW | PERMIT SET |
| 1 | | | |

DETAILS I

S3.0

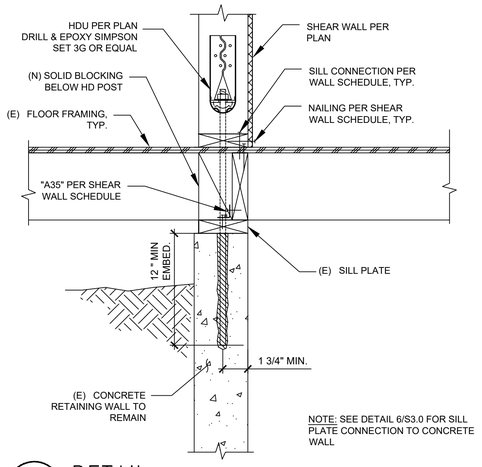


12 DETAIL
SCALE: 1-1/2"=1'-0"

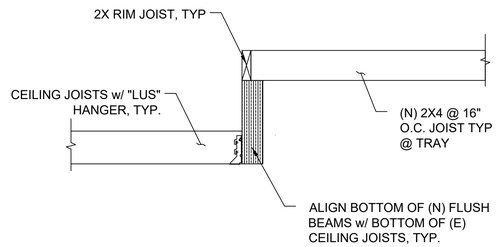


9 DETAIL
SCALE: 1"=1'-0"

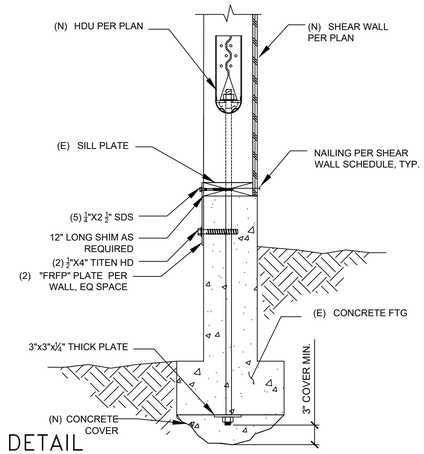


6 DETAIL
SCALE: 1-1/2"=1'-0"

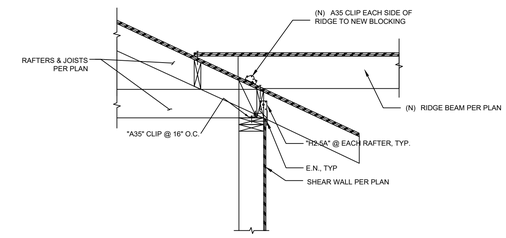


3 DETAIL
SCALE: 3/4"=1'-0"

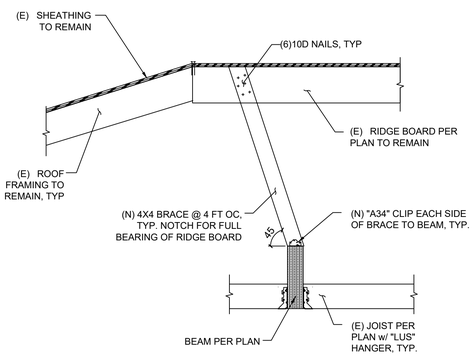


11 DETAIL
SCALE: 3/4"=1'-0"

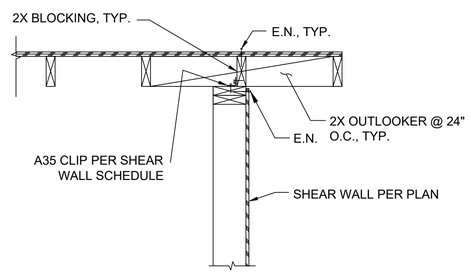


8 DETAIL
SCALE: 1"=1'-0"

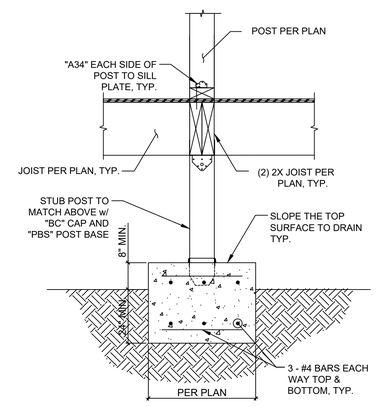


5 DETAIL
SCALE: 3/4"=1'-0"

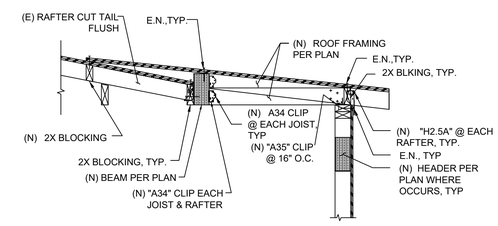


2 DETAIL
SCALE: 3/4"=1'-0"

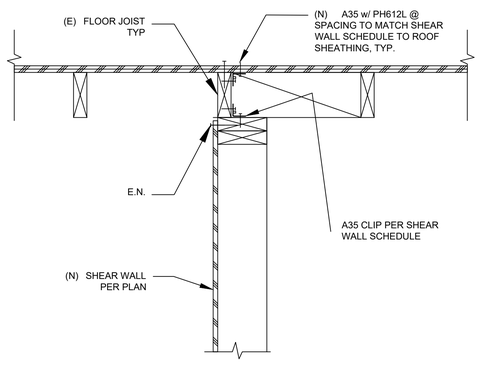


10 DETAIL
SCALE: 1-1/2"=1'-0"

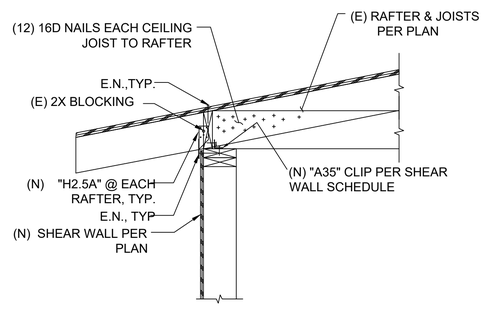


7 DETAIL
SCALE: 1"=1'-0"

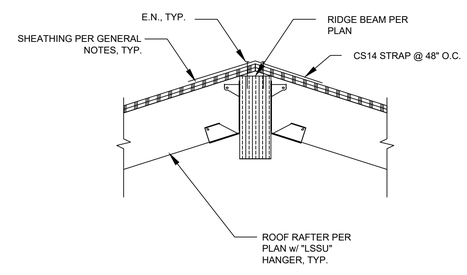


4 DETAIL
SCALE: 1-1/2"=1'-0"

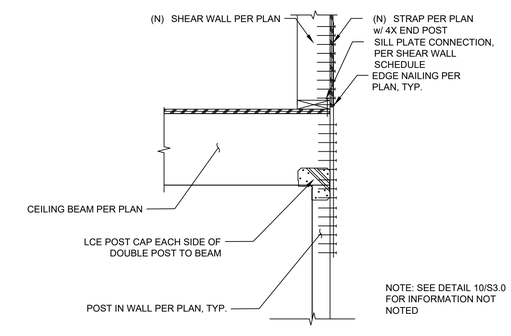


1 DETAIL
SCALE: 1"=1'-0"


WINGERT ENGINEERING
Residential Design Services

LAUREN WINGERT
5049 SUTHERLAND DR
CONCORD, CA 94521

T. 925.330.3731

lauren@wingertengineering.com


REGISTERED PROFESSIONAL ENGINEER
LAUREN M WINGERT
C 80032
CIVIL
STATE OF CALIFORNIA

# SUMMIT REMODEL & ADDITION

40 W SUMMIT
EMERALD HILLS, CA

| Rev# | Date | By | Issue |
|---|---|---|---|
| | 10/22/2024 | LW | PERMIT SET |
| ⚠ | | | |
| | | | |
| | | | |

DETAILS II

S3.1